APPENDIX W

HUDSON RIVER PSYCHIATRIC CENTER

North Area
Remedial Investigation Report

NYSDEC #C314121

Prepared for:

EFG/DRA Heritage, LLC

Prepared by:

PVE Sheffler, LLC
48 Springside Avenue, Poughkeepsie, NY 12603
(845) 454-2544

December 2015

Table of Contents

1 INTRODUCTION 1
1.1 SITE DESCRIPTION 3
1.2 HISTORIC USE 3
1.3 PREVIOUS INVESTIGATIONS 4
1.4 AREAS OF CONCERN 4
2 REMEDIAL INVESTIGATION (RI)ACTIVITIES 7
2.1 RI FIELD WORK 7
2.1.1 UTILITY MARKOUT/GEOPHYSICAL SURVEY 8
2.1.2 TEST PITS 8
2.1.3 SOIL SAMPLING 8
2.1.4 GROUNDWATER SAMPLING 9
2.1.5 VAPOR SAMPLING 10
2.1.6 OTHER FIELD WORK 11
2.1.7 DEVIATIONS 12
2.1.8 ADHERENCE TO HASP, QAPP, AND CAMP 13
3 REMEDIAL INVESTIGATION RESULTS 14
3.1 PHYSICAL CHARACTERISTICS and FIELD OBSERVATIONS 14
3.1.1 TEST PIT OBSERVATIONS 14
3.1.2 SOIL BORING OBSERVATIONS 18
3.1.2.1 Soil Borings - AOC-1: Power House and Former Coal Storage Area 18
3.1.2.2 Soil Borings - AOC-2: Auto Garage Area 19
3.1.2.3 Soil Borings - AOC-3: Car Wash Area 19
3.1.2.4 Soil Borings - AOC-4: Fire Station Fuel Storage and Dispensing Area 19
3.1.2.5 Soil Borings - AOC-5: Building 49 Former Gasoline Fueling Station 19
3.1.2.6 Soil Borings - AOC-6: Mortuary Area 20
3.1.2.7 Soil Borings - AOC-7: Maintenance Building 20
3.1.2.8 Soil Borings Outside the AOC's 20
3.1.3 DIRECTION OF GROUNDWATER FLOW 20
3.2 NATURE AND EXTENT OF CONTAMINATION 21
3.2.1 Standards Criteria & Guidance 21
3.2.2 SOIL RESULTS 22

3.2.2.1 Soil Results - AOC-1: Power House and Former Coal Storage Area 22
3.2.2.2 Soil Results - AOC-2: Auto Garage Area 24
3.2.2.3 Soil Results - AOC-3: Car Wash Area 25
3.2.2.4 Soil Results - AOC-4: Fire Station Fuel Storage and Dispensing Area 25
3.2.2.5 Soil Results - AOC-5: Building 49 Former Gasoline Fueling Station 27
3.2.2.6 Soil Results - AOC-6: Mortuary Area 28
3.2.2.7 Soil Results - AOC-7: Maintenance Building 29
3.2.2.8 Soil Results - Additional samples collected outside the AOC's 29
3.2.3 GROUNDWATER RESULTS 32
3.2.4 VAPOR RESULTS 34
3.2.5 DATA VALIDATION 35
3.3 SUMMARY OF REMEDIAL INVESTIGATION RESULTS 37
3.3.1 AOC-1: POWER HOUSE AND FORMER COAL STORAGE AREA 37
3.3.2 AOC-2: AUTO GARAGE AREA 38
3.3.3 AOC-3: CAR WASH AREA 39
3.3.4 AOC-4: FIRE STATION FUEL STORAGE AND DISPENSING AREA 40
3.3.5 AOC-5: BUILDING 49 FORMER GASOLINE FUELING STATION 41
3.3.6 AOC-6: MORTUARY AREA 42
3.3.7 AOC-7: MAINTENANCE BUILDING 43
3.3.8 ADDITIONAL LOCATIONS OUTSIDE AOC'S 44
4 QUALITATIVE EXPOSURE ASSESSMENTS 45
4.1 QUALITATIVE HUMAN HEALTH EXPOSURE ASSESSMENT 45
4.1.1 SITE CONDITIONS 46
4.1.2 CONCEPTUAL SITE MODEL 46
4.1.2.1 Sources of Contamination 46
4.1.2.2 Receptor Populations 48
4.1.2.3 Potential Exposure Pathways 48
4.1.3 OVERALL HUMAN HEALTH EXPOSURE ASSESSMENT 49
4.1.3.1 Current Conditions 49
4.1.3.2 Construction/Remediation Activities 50
4.1.3.3 Future (Post-Construction) Conditions 50
4.1.3.4 Potential Ecological Risks 50
4.1.4 QHHEA Summary 51
4.2 FISH AND WILDLIFE RESOURCE IMPACT ANALYSIS (FWRIA) 53

5 SUMMARY AND CONCLUSIONS
5.1 Surface Soil 55
5.2 Subsurface Soil 55
5.3 Soil Vapor 55
5.4 Groundwater 56
5.5 Conclusions 56
6 CERTIFICATION 57

LIST OF FIGURES

Figure 1 – Site Location Figure
Figure 2 – Selected Site Features
Figure 3A - Sampling Locations – Site Wide North
Figure 3B – Sampling Locations – Site Wide South
Figure 4 – Surface Soil Sampling Locations
Figure 5 – Soil Boring Locations
Figure 6 – Groundwater Monitoring Well Locations
Figure 7 – Soil Vapor Sampling Locations
Figure 8 – Groundwater Contour Map
Figure 9 – Surface Soil (0-2') Exceedances of RRUSCOs
Figure 10 – Subsurface Soil (>2') Exceedances of RRUSCOs
Figure 11 – Groundwater Class GA Exceedances
Figure 12 – Vapor Sample Exceedances
Figure 13 - Lithology Cross Section Locations
Figure 14 - East-West Lithology Cross Section (B-B^1)
Figure 15 - North-South Lithology Cross Section (A-A^1)
Figure 16 – Surface Soil Exceedances

LIST OF TABLES

Table 1A - VOCs in Soil - AOC-1
Table 1B - SVOCs in Soil - AOC-1
Table 1C - Total Metals in Soil - AOC-1
Table 1D - Pesticides, Herbicides, and PCBs in Soil - AOC-1

Table 2A - VOCs in Soil - AOC-2
Table 2B - SVOCs in Soil - AOC-2
Table 2C - Total Metals in Soil - AOC-2

Table 2D - Pesticides, Herbicides, and PCBs in Soil - AOC-2

Table 3A - VOCs in Soil - AOC-3
Table 3B - SVOCs in Soil - AOC-3
Table 3C - Total Metals in Soil - AOC-3
Table 3D - Pesticides, Herbicides, and PCBs in Soil - AOC-3

Table 4A - VOCs in Soil - AOC-4
Table 4B - SVOCs in Soil - AOC-4
Table 4C - Total Metals in Soil - AOC-4
Table 4D - Pesticides, Herbicides, and PCBs in Soil - AOC-4

Table 5A - VOCs in Soil - AOC-5
Table 5B - SVOCs in Soil - AOC-5
Table 5C - Total Metals in Soil - AOC-5
Table 5D - Pesticides, Herbicides, and PCBs in Soil - AOC-5

Table 6A - VOCs in Soil - AOC-6
Table 6B - SVOCs in Soil - AOC-6
Table 6C - Total Metals in Soil - AOC-6
Table 6D - Pesticides, Herbicides, and PCBs in Soil - AOC-6

Table 7A - VOCs in Soil - AOC-7
Table 7B - SVOCs in Soil - AOC-7
Table 7C - Total Metals in Soil - AOC-7
Table 7D - Pesticides, Herbicides, and PCBs in Soil - AOC-7

Table 8A - VOCs in Soil - Temporary well installation
Table 8B - SVOCs in Soil - Temporary well installation
Table 8C - Total Metals in Soil - Temporary well installation
Table 8D - Pesticides, Herbicides, and PCBs in Soil - Temporary well installation

Table 9A - VOCs in Soil - Surface samples outside AOCs
Table 9B - SVOCs in Soil - Surface samples outside AOCs
Table 9C - Total Metals in Soil - Surface samples outside AOCs
Table 9D - Pesticides, Herbicides, and PCBs in Soil - Surface samples outside AOCs

Table 10A - VOCs in Groundwater
Table 10B - SVOCs in Groundwater
Table 10C - Total Metals in Groundwater

Table 10D - Pesticides, Herbicides, and PCBs in Groundwater
Table 11 - VOCs in Soil Vapor

APPEDNICES

Appendix A - Boring Logs
Appendix B - Monitoring Well Construction Diagrams
Appendix C – Vapor Sampling Logs
Appendix D - Test Pit Captioned Photos
Appendix E - Disposal Receipt for Car Wash OWS tank
Appendix F - Data Validator Resume and SOQ
Appendix G - Analytical Reports (soil, groundwater, and vapor) - Submitted electronically (CD)
Appendix H - Data Usability Summary Reports (DUSR) - Submitted electronically (CD)

1 INTRODUCTION

The EFG/DRA Heritage, LLC Brownfield project is located on lands of the former New York State Hudson River Psychiatric Center (HRPC) in Poughkeepsie, New York (Figure 1). Site development began in 1868 and continued through the 1950s when the hospital complex reached a peak patient population of more than 6,000. The hospital ceased to operate in the 1990s and the state divested the property in the years that followed. Over the years, since cessation of operations, the buildings and grounds have deteriorated, with some structures destroyed by fire and the remainder falling victim to looters and weather, with significant interior and structural damage.

In November 2013 a 156-acre portion of the former HRPC (the Property) was acquired by EFG/DRA Heritage, LLC, which plans to redevelop the Property for mixed residential and commercial use. Redevelopment plans call for the preservation of certain historically significant structures, if feasible, and demolition of the remaining dilapidated buildings. The redevelopment project is spatially divided between the northern and southern portions of the Property, with commercial/light industrial/retail mixed uses planned to be developed in the south, and multi-family residential development (predominantly townhomes) planned in the north. This Remedial Investigation Report pertains to the northern portion of the Property.

As a consequence of its 130-year history of operation as a large, self-sufficient care facility, many areas of the HRPC had buildings or operations that stored and/or used hazardous substances. In addition, for much of its history, all supplies, including hazardous materials and substances, were delivered by rail, using the rail spur that runs along the eastern portion of the HRPC Property. The northern part of the property is where the majority of the physical plant operations existed, including the Power House and associated coal storage area; auto-service facility; car wash; fuel storage and dispensing equipment; and a drum storage area. Many of these use-related conditions were readily observable in the period since the hospital was closed; recent environmental investigations have confirmed the presence of contamination in and around several areas of historical processes and operations.

PVE Sheffler prepared a Remedial Investigation Work Plan (RIWP) dated December 2013 and revised April 2014, which was approved by NYSDEC on April 22, 2014. Subsequent addenda to the RIWP have been prepared and approved as follows:

- Addendum #1 dated May 14, 2014, described changes to the RI due to site conditions and on-site discussions with NYSDEC. Because this document didn't affect the data being collected NYSDEC approval was not required.
- Addendum #2 dated July 3, 2014, and approved by NYSDEC on July 9, 2014.

- Addendum #3 dated November 21, 2014, and approved by NYSDEC on December 4, 2014

In accordance with DER-10 3.1(c)1, the purpose of a Remedial Investigation (RI) is to:

- Delineate the areal and vertical extent of contaminants in all media at or emanating from the site;
- Determine the surface and subsurface characteristics of the site, including topography, geology and hydrogeology, including depth to groundwater;
- Identify the sources of contamination, the migration pathways, and actual or potential receptors of contaminants on or through air, soil, bedrock, sediment, groundwater, surface water, utilities, and structures at a contaminated site, without regard to property boundaries;
- Collect and evaluate all data necessary for a fish and wildlife resource impact analysis (FWRIA) to determine all actual and potential adverse impact to fish and wildlife resources;
- Collect and evaluate all data necessary to evaluate the actual and potential threats to public health and the environment. This includes evaluating all current and future potential public health exposure pathways (a Qualitative Human Health Exposure Assessment) as well as potential impacts to biota; and
- Collect the data necessary to evaluate any release to an environmental medium and develop remedial alternative(s) to address the release.

These requirements can be summarized into the following goals for the RI

- Characterize the lateral and vertical extent of contamination in the HRPC North Area to the degree necessary to evaluate the human health and ecological risks and to develop a remedy to reduce these risks.
- Document the sources of contamination in the HRPC North Area, including a preliminary evaluation of ongoing sources of contamination that need to be addressed so that a sustainable remedy can be developed and implemented.
- Determine the human health and ecological risks from exposure to contamination.

This Remedial Investigation Report (RIR) describes activities to characterize and delineate use-related contamination identified during prior studies and presents the results of the investigation.

1.1 SITE DESCRIPTION

The former HRPC property is located on the east side of US Route 9 in the Town of Poughkeepsie, New York, and borders the southern boundary of the Town of Hyde Park. The Brownfield Cleanup Program (BCP) project that is the subject of this RIR is an approximately 40-acre area in the northeastern part of the larger property, identified on Town of Poughkeepsie Tax Maps as Section 6163 Block 03 Lot 011149. The boundaries of the BCP Area (Site) are shown in Figure 2.

Numerous structures remain on Site, including a former Power House, storage sheds, garages, residences, maintenance buildings, recreation facilities, and fire station. With the exception of some garages used for storage of maintenance equipment, none of the buildings are currently occupied or utilized.

The topography of the Site varies considerably. In the northeastern quadrant of the Site, elevations range from approximately 150 feet to 220 feet MSL. Regional surface water flows in a westerly direction toward the Hudson River, the eastern bank of which is approximately 0.50 mile west of the western boundary of the BCP Site. Regional groundwater flow is to the southwest. Localized groundwater movement in the vicinity of the BCP Site is likely influenced by topography and underlying bedrock surface contours. Depth to groundwater ranges from 10-15 feet below grade.

Soils encountered during the Remedial Investigation were a mixture of sand, silt, clay, gravel, and cobbles. According to the USDA soil survey for Dutchess County, the soil types present on site are the Hoosic gravelly loam and Dutchess silt loam. Hoosic gravelly loam has high infiltration rates and is well drained to excessively well-drained. Dutchess silt loam has moderate infiltration rates and is moderately well to well drained.

1.2 HISTORIC USE

Construction of the HRPC began in 1868. The facility expanded through the 1950s and eventually housed more than 6,000 residents. The property included patient dormitories, staff residences, office and administration buildings, support services buildings, recreation facilities, a Power House, parking areas, and undeveloped land. The HRPC was connected to the Town of Poughkeepsie central sewer and water systems. Electricity and natural gas were provided by Central Hudson Gas & Electric. The facility began to shrink in population in the 1970s as parts of the hospital complex were closed, and operations ceased entirely in the 1990s.

1.3 PREVIOUS INVESTIGATIONS

The HRPC property has been the subject of several episodes of environmental evaluation and physical testing. A summary of results and copies of the reports are presented in Section 2.4 of the PVE Sheffler RIWP. Reports include two ASTM-compliant Phase I Environmental Site Assessments (ESAs), a tank closure report, and a report describing focused environmental testing (Phase II assessment following the 2013 ESA).

1.4 AREAS OF CONCERN

Based on the results of previous investigations by consultants, and other research into the history of the property, PVE Sheffler identified the following Areas of Concern (AOCs):

AOC-1: Power House and Former Coal Storage Area

The Power House (Building 33) is situated near the center of the Site. The plant originally burned coal, which was transported by rail. The Power House was converted to burn #6 fuel oil in the 1970s. Coal was stored in piles on land north of the Power House, and #6 fuel oil was stored in two 126,000-gallon aboveground tanks adjacent to its eastern side.

The ASTs were located in a diked containment area with an earthen bottom. The tanks were removed in 2011 and the removal is described in the February 16, 2011, tank closure report by William L. Going & Associates Inc. Subsequently, a Town water line was constructed, which required the filling of a portion of the containment area with soil from the nearby embankment.

AOC-1 includes the former AST location and coal storage area.

AOC-2: Auto Garage Area

A floor drain and two lifts were observed in the former Auto Garage (Building 99) during PSI's Phase I ESA site inspections. PSI's geophysical survey could not establish the discharge location of the floor drain.

PSI also identified a waste oil drum storage area in the immediate vicinity of the two sheds (Building 30) on the north side of the Auto Garage.

AOC-2 includes the floor drain location and drum storage location. Another garage building is located immediately east of Building 99 ("eastern garage"). No maintenance activities have been identified at this building, but this building is included in AOC-2.

AOC-3: Car Wash Area

The former Car Wash was located in Building 52. Several floor drains are present in the building. The floor drains are connected to two oil water separators (OWS), one inside the building and one exterior to the building.

AOC-3 includes the floor drains and OWS.

AOC-4: Former Fire Station Fuel Storage and Dispensing Area

The former Fire Station was located in Building 41 and includes a garage area where maintenance activities may have occurred. A fuel dispenser island is present along the eastern side of this building. At the time of the preparation of the RIWP, the location of the tanks was unknown, but was presumed to be close to the dispenser island. During the RI it was discovered that the most recent set of tanks used for fuel storage were ASTs located south of the building; the bounds of the AOC were adjusted to include the AST area.

AOC-4 includes the dispenser island, AST location, and associated piping.

AOC-5: Building 49 Former Gasoline Fueling Station

AOC-5 was identified after the initial RIWP was approved by NYSDEC. Supplemental research identified a gasoline refueling operation immediately east of Building 49 (the Bakery/Storage building). No above-grade infrastructure (dispensers, piping, traffic pads, etc.) were visible in this area. Two underground gasoline tanks, referred to as tanks #28 and #29 in historical property records, were associated with the fueling station. The 1996 Phase I ESA indicated both tanks to be 2,000-gallon in capacity; however, a Petroleum Bulk Storage Facility Information Sheet, referred to them as 1,000-gallons and 2,000-gallons in capacity, respectively. Both USTs were removed in 1998.

AOC-5 includes the fueling station and associated piping and former tank locations. This AOC is located within the bounds of the coal storage area of AOC-1.

AOC-6: Mortuary

AOC-6 was identified after the initial RIWP was approved by NYSDEC. Research indicates this building was used to evaluate post-mortem conditions on patients at the psychiatric center. The building included several laboratories. Floor drains in the first floor laboratory are believed to exit the building to the east and are connected to the local sanitary system.

AOC-6 includes the Mortuary building and the area immediately surrounding it.

AOC-7: Maintenance Building

AOC-7 was identified after the initial RIWP was approved by NYSDEC. Research indicates this building was used to house general maintenance equipment and materials, as well as offices for maintenance staff. The interior of the building has not been inspected by PVE Sheffler personnel due to significant quantities of asbestos and debris located throughout the building.

AOC-7 includes the Maintenance building and the area immediately surrounding it.

Outside AOCs

Investigations also were performed outside the identified AOCs, but within the bounds of the BCP Site in order to evaluate background conditions at the Site.

2 REMEDIAL INVESTIGATION (RI) ACTIVITIES

Sampling activities during the Remedial Investigation were divided into three categories: (1) sampling conducted to delineate the extent of contaminants identified during previous investigations; (2) screening for contamination in areas that had not been previously sampled or investigated; and (3) evaluating areas where contamination was suspected but not investigated previously.

2.1 RI FIELD WORK

The Remedial Investigation (RI) field work consisted of a geophysical survey, test pit excavation, soil and groundwater sampling, and vapor sampling. Quality assurance/quality control (QA/QC) samples were collected, including trip blanks, field blanks, matrix spike/matrix spike duplicates, and field duplicates in accordance with New York State Analytical Services Protocol (ASP) for Category B deliverables. Additional field work included evacuating the contents of an oil-water separator tank at AOC-3, and disposing of these contents off-site.

Field work was divided into three rounds of sampling:

- Round 1 consisted of majority of the tasks outlined in the April 2014 RIWP.
- Round 2 implemented the tasks described in Addendum 2 of the RIWP, including delineation of contaminants identified in soil at AOC -1 (Power House), and determining the relative extent of impact to groundwater from these contaminants. Round 2 also included the collection and analysis of vapor samples in areas where volatile organic compounds (VOCs) were identified in soil, or in AOCs where contaminated soil vapors were likely to be present
- Round 3 implemented the tasks described in Addendum 3 and included evaluation of soil and groundwater quality at AOC-6 and AOC-7, collection and analysis of additional surface samples outside the AOCs, and resampling of groundwater and soil vapor.

Any deviations to the proposed work plans are described in the "Deviations" section of this report.

All RI field work was conducted in accordance with the Quality Assurance Project Plan (QAPP) and the Health and Safety Plan (HASP) appended to the RIWP.

2.1.1 UTILITY MARKOUT/GEOPHYSICAL SURVEY

Prior to remedial activities, a mark-out of public and private utilities was completed within the investigation areas. These surveys located underground utilities, conduits, and anomalies and was used to guide placement of drilling locations

2.1.2 TEST PITS

Sixteen test pits were excavated across the Site to determine the extent of subsurface disturbances and visually evaluate areas primarily outside the bounds of the AOCs,

Test pit activities occurred on April 24-25, May 2, and July 24, 2014. Test pit locations are shown on Figure 3 and photographs are attached in Appendix D. All test pits were backfilled with the excavated material.

2.1.3 SOIL SAMPLING

Soil sampling locations are identified in Figures 4 and 5. Boring logs are attached in Appendix A

As request by NYSDEC, surface soil samples collected outside AOCs (designated with prefix "SS") were collected utilizing hand tools. Surface soil samples collected within AOCs were sometimes collected with hand tools and sometimes with drilling equipment, depending on field conditions.

Soil borings were advanced using either a direct-push rig (e.g. Geoprobe) equipped with macrocore tubes, or a hollow-stem auger rig equipped with split spoons. In most situations, soil borings were advanced to a depth of 20' below grade or to refusal. If refusal was encountered above the proposed final boring depth, and the refusal was not attributed to bedrock, the boring location was adjusted and re-drilled.

At each boring location, field personnel documented subsurface conditions, including screening soil samples for VOCs using a photoionization detector (PID) and headspace techniques. The project geologist kept a detailed log of each core, including: lithology, grain size, stratigraphic changes, color, and occurrence of groundwater were recorded. Observations were made as to the presence of potential contamination in the soil samples based on odor, visual observations or PID readings.

Soil samples were collected from intervals defined in the RIWP and subsequent addenda. When the sample interval was not prescribed, the interval selected for laboratory analysis was based on field observations, including visual and olfactory indications of contamination, as well as direct instrument readings, and on the probable location of contamination based on the AOC being investigated.

Samples were analyzed for some or all of the following parameters: Target Compound List (TCL) VOCs by EPA Method 5035/8260; TCL semi-volatile organic compounds (SVOCs) by EPA Method 8270; polychlorinated biphenyls (PCBs) by EPA Method 8082; pesticides by EPA Method 8081; and Target Analyte List (TAL) metals by EPA Method 6000/7000 series. As requested by the Department, one third (1/3) of the soil samples collected within the AOCs were analyzed for the "full list" (TCL and TAL lists) of analytes. All samples were analyzed by a New York State Department of Health (NYSDOH) Environmental Laboratory Approval Program (ELAP)-certified laboratory providing Category B deliverables.

Upon completion of probing/drilling, each boring not used for the construction of a monitoring well was filled to within 12 inches of the surface with either the drill cuttings or a cement/bentonite grout mixture (if gross contamination was identified). Soil borings filled with soil cuttings were completed to ground surface using drilling sand, if necessary. The borings were patched with the appropriate materials (e.g., asphalt or concrete patch), depending on the location.

2.1.4 GROUNDWATER SAMPLING

Groundwater sampling locations are identified in Figure 6. Well construction diagrams are attached in Appendix B.

Groundwater samples were collected from monitoring wells completed within previously drilled soil borings. Monitoring wells were constructed in one of two ways:

- Monitoring wells outside an AOC were installed using a direct-push rig. Wells were constructed of 1"-diameter Schedule 40 PVC with a screened interval consisting of a 0.020-inch slotted screen. The borehole annulus was filled with silica sand to a height of 2 feet above the top of the screen to form a filter pack. Bentonite was emplaced above the filter pack to form a 2-foot thick seal. The remainder of the borehole annulus was filled with a bentonite-cement grout. No ground-surface completion was constructed.
- Monitoring wells inside an AOC were installed using a conventional drilling rig and hollow-stem augers. Wells were constructed of 2"-diameter Schedule 40 PVC with a

screened interval consisting of a 0.020-inch slotted screen. The borehole annulus was filled with silica sand to a height of 2 feet above the top of the screen to form a filter pack. Bentonite was emplaced above the filter pack to form a 2-foot thick seal. The remainder of the borehole annulus was filled with a bentonite-cement grout. Wellheads were either flush-mount or stickup design. Concrete was placed around the wellhead.

Following installation of groundwater monitoring wells, the wells were developed in order to remove fine-grained sediment from the well and filter pack. A surge and pump method was used to develop 2"-diameter wells and a peristaltic pump or bailer was used in 1"-diameter wells.

With the exception of TMW-1R (see "Deviations" section), water samples were collected from the monitoring wells utilizing low-flow sampling methods and equipment with dedicated tubing. The wells were purged by pumping groundwater from the well until temperature, pH, and conductivity stabilized.

Samples were analyzed for some or all of the following parameters: TCL VOCs by EPA Method 8260; TCL SVOCs by EPA Method 8270; PCBs by EPA Method 8082; pesticides by EPA Method 8081; and TAL metals by EPA Method 6000/7000 series. All samples were analyzed by an ELAP-certified laboratory providing Category B deliverables.

One piezometer (PZ-1) was installed during Round 2 to assist in determining the direction of groundwater flow in the area of the Power House. Only depth-to-water measurements were collected from this location; no water quality samples were collected from this well.

The top-of-casing elevations of wells were surveyed to the nearest 0.01 foot by a licensed surveyor. Depth-to-water measurements were collected from all of the monitoring wells to develop a groundwater contour map (see "Direction of Groundwater Flow" section).

2.1.5 VAPOR SAMPLING

Vapor sampling locations are identified in Figure 7. Vapor sampling logs are attached in Appendix C.

Both sub-slab samples and soil gas samples were collected from vapor sampling implants following the NYSDOH Guidance for Evaluating Vapor Intrusion in the State of New York (NYSDOH Guidance), October 2006:

- Sub-slab vapor points were installed in accordance with the NYSDOH Guidance for temporary sub-slab vapor sample probes. A hole was drilled through the concrete slab and polyethylene tubing was advanced to a maximum of 2 inches below the floor slab. A non-VOC-containing and non-shrinking product was used to seal the annular space around the tubing to the surface. Immediately prior to sample collection, sub-slab vapor points were purged of 1 to 3 volumes at a rate that did not exceed 0.2 L/min.
- Soil vapor sample points were installed in accordance with the NYSDOH Guidance for temporary soil vapor sample probes. The probes/implants utilized were 6-inch Geoprobe AT86 implants, constructed of double woven stainless steel screen with stainless steel end fittings. A 2”-diameter soil boring was drilled using a Geoprobe to 5 a depth of feet below grade. Polyethylene tubing was connected to the implant which was then lowered to the bottom of the borehole. The annular space was filled with sand from 5 feet to 3 feet below grade. A granular bentonite seal was installed from 3 feet below grade to ground surface. The polyethylene tubing, which extended above the surface, was capped until sampling. Immediately prior to sample collection, soil vapor points were tested with a helium tracer testing to ensure that an adequate surface seal was created to prevent outdoor air infiltration, and sample points were purged of 1 to 3 volumes at a rate that did not exceed 0.2 L/min.

Sub-slab vapor ports were installed and sampled on July 10-11, 2014. Soil vapor ports were installed on July 21, 2014, and sampled on July 22, 2014. Three soil vapor ports were re-sampled on September 2, 2014. Additional soil vapor ports were installed on December 18 and 19, 2014, and sampled on December 23, 2014.

Vapor samples were collected in laboratory-supplied, batch certified-clean Summa® canisters calibrated for a sampling period of 2 hours at a flow rate not to exceed 0.2 L/min. Vapor sample canisters were submitted to a NYSDOH ELAP-certified laboratory for analysis of VOCs via US EPA Method TO-15.

2.1.6 OTHER FIELD WORK

A total of 700 gallons of liquid from the exterior oil-water separator (OWS) tank at the car wash area was pumped out on April 25, 2014, by Buckner Oil Service and Industrial Tank Cleaning Inc. Disposal receipts are attached in Appendix E.

2.1.7 DEVIATIONS

Several deviations from the proposed work plan are described in the subsequent addenda. Additional deviations, either not previously described in addenda or not fully described, are explained below:

- Boring CW-1 was proposed in the RIWP. During site investigation activities, this location was completed as a test pit (TP-2). No samples were collected. See the test pit section of this report for a summary of findings at this location. Because CW-1 was to be completed as a monitoring well, the monitoring well at AOC-3 was completed at CW-2 and renamed MW-CW-2.
- Boring AG-7 was proposed in the RIWP. During site investigation activities, this location was completed as a test pit (TP-11). No samples were collected; see the test pit section of this report for a summary of findings at this location.
- Surface soil samples (designated with prefix "SS") were requested by NYSDEC to be collected from 0-2" and 12-24" utilizing hand tools. In some cases, 24" was not reached with hand tools due to refusal from subsurface conditions, and samples were collected from available soil.
- Some monitoring wells originally proposed to be installed with a direct-push rig, were installed using a conventional auger rig due to refusal with the direct-push equipment.
- Well TMW-1R was installed as a 1"-diameter well to a depth of 38.5 feet below grade with a depth-to-water at development of 31 feet below grade. Low-flow sampling equipment capable of operating at this depth in the small-diameter PVC was not available. Therefore the well was purged of three well volumes utilizing hand-bailing techniques and then a water sample was collected via bailer.
- The location of piezometer PZ-1 was moved because refusal was encountered at several locations
- The location of boring PH-SS-7 was moved due to the presence of a flooded subbasement at the originally proposed location
- The location of boring PH-8 was moved to allow access by the Geoprobe rig.
- The location of vapor sample PH-SV-1 was moved because the concrete surface in the originally proposed location was covered with a thin film of oil.
- Soil samples were collected from location PH-10 on different dates. The sample from 0-2" was collected on May 7, 2014. Samples from deeper depths were collected on July 15, 2014.

2.1.8 ADHERENCE TO HASP, QAPP, AND CAMP

The RIWP was implemented in accordance with the procedures specified in PVE Sheffler's Health and Safety Plan (HASP), Quality Assurance Project Plan (QAPP), and Community Air Monitoring Program (CAMP) found in Appendices A and B of this report. PVE Sheffler personnel supervised all Site activities.

3 REMEDIAL INVESTIGATION RESULTS

Summarized below are the physical observations and analytical results of the RI for the HRPC North Area. Analytical data are presented in the attached tables and are summarized below. Please note laboratory reports include Tentatively Identified Compounds (TICs) but are not presented in the attached tables.

3.1 PHYSICAL CHARACTERISTICS and FIELD OBSERVATIONS

Field observations were documented during the excavation of 16 test pits and the collection of soil samples from soil boring locations. Samples from test pits were not retained for laboratory analysis, but observations of subsurface conditions were recorded and are described below. Observations made during drilling of soil borings, not reflected in the analytical results, are also described below.

3.1.1 TEST PIT OBSERVATIONS

A summary of test pit observations is provided below. Test pits were excavated in 16 locations. Test pit locations are shown on Figures 3A and 3B.

Test Pit TP-1

Test Pit TP-1 was excavated on April 24, 2014, northwest of the intersection of Hudson View Drive and Storehouse Road. TP-1 was excavated to a depth of 5 feet and was approximately 5 feet wide by 10 feet long. Soils encountered were medium brown till or poorly sorted stratified drift. Grain sizes ranged from silt and clay to large cobbles up to 12 inches in diameter. No PID readings were observed.

Test Pit TP-2

Test Pit TP-2 was excavated on April 24, 2014, in the location of proposed boring CW-1 referenced in the RI Work Plan, immediately north of the oil-water separator tank in AOC-3 (Car Wash area). TP-2 was excavated to a depth of 4.5 feet and was approximately 4 feet wide by 10 feet long (extending north – south). The uppermost 2.5 feet consisted of dark topsoil; 2.5-4 feet below grade consisted of lighter brown poorly sorted mixture of silt, clay, sand, and gravel with small cobbles (up to 6 inches in diameter); 4-4.5 feet below grade consisted of native darker brown soil. The partially exposed tank was constructed of fiberglass. No PID readings were observed.

Test Pit TP-3

Test Pit TP-3 was excavated on April 24, 2014, east of the bakery and west of the auto garage on the elevated fenced-in area within AOC-5 (Fuel Dispensary area). TP-3 was excavated to a depth of 6 feet and was approximately 5 feet wide by 10 feet long (extending north - south). The uppermost 0.5 feet of the excavation consisted of a dark brown top soil; 0.5-1.5 feet below grade consisted of clinker or slag; 1.5 to 2 feet below grade consisted of a light brown fill soil; 2-5 feet below grade consisted of coal ash; 5-6 feet below grade consisted of native light brown soil. No PID readings were observed.

Test Pit TP-4

Test Pit TP-4 was excavated on April 24, 2014, along the southern fence within the conduit storage area. TP-4 was excavated to a depth of 2.25 feet and was approximately 5 feet wide by 10 feet long (extending east - west). The uppermost 1.5 feet of the excavation consisted of a dark brown topsoil; 1.5-2.25 feet below grade consisted of native light brown gravelly soil; bedrock was encountered at approximately 2.25 feet below grade. No PID readings were observed.

Test Pit TP-5

Test Pit TP-5 was excavated on April 25, 2014, on the southwest corner of the Storage/Bakery building. TP-5 was excavated to a depth of 5.5 feet and was approximately 7 feet wide by 10 feet long (extending north - south). The uppermost 0.5 feet of the eastern edge of the pit encountered a manhole connected to local sanitary sewer; the excavation was therefore halted, and resumed 2.5 feet to the west. The uppermost 0.66 feet consisted of a dark brown topsoil; 0.66-2 feet below grade consisted of a light brown fill soil with small cobbles; and 2-5.5 feet below grade consisted of light brown fill soil, larger cobbles, and brick fragments. No PID readings were observed.

Test Pit TP-6

Test Pit TP-6 was excavated on April 25, 2014, approximately 35 feet east of TP-3 within AOC-5 (the Fuel Dispensary area). TP-6 was excavated to a depth of 6 feet and was approximately 8 feet wide by 15 feet long (extending north - south). The uppermost 0.66 feet consisted of blacktop and fill; 0.66-1.5 feet below grade consisted of clinker/slag; 1.5-4.5 feet below grade consisted of large cobbles (12 inches in diameter), brick, piping and coal ash in the voids; and 4.5-6 feet below grade consisted of native light brown soil and smaller cobbles. No PID readings were observed.

Test Pit TP-7

Test Pit TP-7 was excavated on April 25, 2014, northwest of the Brookside building, east of Brookside Drive. TP-7 was excavated to a depth of 3.5 feet and was approximately 5 feet wide by 8 feet long (extending north - south). The uppermost 1.5 feet of the test pit consisted of a light brown native soil with small cobbles (less than 6 inches in diameter); and from 1.5-3.5 feet below grade weathered shale was encountered. Excavation was halted at 3.5 feet below grade due to bedrock. No PID readings were observed.

Test Pit TP-8

Test Pit TP-8 was excavated on April 25, 2014, east of AOC-3 (Car Wash Area) within the small grass island adjacent to Hudson View Drive. TP-8 was excavated to a depth of 8 feet and was approximately 5 feet wide by 8 feet long (extending north - south). The uppermost 1 foot consisted of a dark brown topsoil; piping was discovered along the eastern edge at this depth. Excavation resumed 2.5 feet to the west. The material from 1.5-4 feet below grade consisted of coal ash; 4-5.5 feet below grade consisted of fill material; 5.5-8 feet below grade consisted of coal ash; and at approximately 8 feet below grade native light brown native soil and small cobbles were encountered. No PID readings were observed.

Test Pit TP-9

Test Pit TP-9 was excavated on April 25, 2014, in the southwestern corner of the BCP boundary east of the Administration Building. TP-9 was excavated to a depth of 6 feet and was approximately 5 feet wide by 8 feet long (extending north - south). The uppermost 0.66 feet consisted of a dark brown topsoil; 0.66-2 feet below grade consisted of poorly sorted medium brown gravel; 2-5 feet below grade consisted of poorly sorted medium brown gravel with medium cobbles (6 inches in diameter); 5-6 feet below grade consisted of a well sorted medium brown gravel. No PID readings were observed.

Test Pit TP-10

Test Pit TP-10 was excavated on April 25, 2014 along Hudson View Drive, east of AOC- 4 (Fire Station Fuel Storage and Dispensing Area). TP-10 was excavated to a depth of 13 feet and was approximately 6 feet wide by 10 feet long (extending west - east). The uppermost 1.5 feet consisted of a dark brown topsoil; 1.5-3 feet below grade consisted of a gray coal ash; 3-5 feet below grade consisted of a red coal ash; and 5-13 feet below grade consisted of gray coal ash. No PID readings were observed.

Test Pit TP-11

Test Pit TP-11 was excavated on May 2, 2014, at a surface depression north of the western auto garage in AOC-2, at the location of boring AG-7 referenced in the RI Work Plan. TP-11 was excavated to a depth of 5.5 feet and was approximately 5 feet wide by 7 feet long (extending east - west). The uppermost 0.5 feet consisted of a dark brown topsoil and coal ash; and 0.5-5.5 feet below grade consisted of light brown soil. No PID readings were observed.

Test Pit TP-12 West

Test Pit TP-12 West was excavated on May 2, 2014, along the west side of the AST concrete pad located at the southern extent of AOC-4. TP-12 West was excavated to a depth of 7 feet and was approximately 2.5 feet wide by 12 feet long (extending from north - south). The uppermost 0.25 feet of the test pit consisted of topsoil and organic litter; 0.25-2 feet below grade consisted of #2 stone and gravel; 2-2.33 feet below grade consisted of a light brown fill soil; 2.33-6.5 feet below grade consisted of coal ash; and 6.5-7 feet below grade consisted of native light brown soil. No PID readings were observed.

Test Pit TP-12 South

Test Pit TP-12 South was excavated on May 2, 2014, along the south side of the AST concrete pad located at the southern extent of AOC-4. TP-12 South was excavated to a depth of 14 feet and was approximately 2.5 feet wide by 10 feet long (extending east - west). The uppermost 0.25 feet of the test pit consisted of topsoil and organic litter; 0.25-13 feet below grade consisted of coal ash; 13-14 feet below grade consisted of a mixture of ash and soil. Native soil was encountered at 14 feet below grade consisting of wet, brown, well graded sand. No PID readings were observed.

Test Pit TP-12 East

Test Pit TP-12 East was excavated on May 2, 2014, along the east side of the AST concrete pad located at the southern extent of AOC-4. TP-12 East was excavated to a depth of 14 feet and was approximately 2.5 feet wide by 10 feet long (extending north - south). The uppermost 0.25 feet of the test pit consisted of topsoil and organic litter; 0.25-4 feet below grade consisted of coal ash and slag; 4-7 feet below grade consisted of medium-brown fill soil; and 7-14 feet below grade consisted of gray coal ash. Native soil was encountered at 14 feet below grade consisting of wet gravel and large cobbles. No PID readings were observed.

Test Pit TP-13

Test Pit TP-13 was excavated on May 2, 2014, located along the southeast corner of the concrete dispenser island pad at AOC-4. TP-13 was excavated to a depth of 7 feet and was approximately 5 feet wide by 12 feet long (extending north - south). The ground surface in this area is covered by asphalt approximately 2 inches thick. References to depths below grade refer to depth beneath the asphalt. Material from 0-2 feet below grade consisted of large cobbles and crushed rock; 2-6 feet below grade consisted of gray coal ash; and 6-7 feet below grade was gravel and wet brown sand. No PID readings were observed.

Test Pit TP-14

Test Pit TP-14 was excavated on July 24, 2014, in AOC-5, in the vicinity of borings FD-1/MW-FD-1 and FD-4 to inspect for tank system components. TP-14 was excavated to a depth of 6 feet and was approximately 2.5 feet wide by 10 feet long (extending east - west). Fill was encountered from ground surface to 4 feet below grade consisting of coal ash and bricks; and 4-6 feet below grade consisted of a mixture of silt, clay, sand, and gravel. A metal pipe was encountered at approximately 4 feet below grade in the test pit oriented north - south. No PID readings were observed.

3.1.2 SOIL BORING OBSERVATIONS

The following subsections present a summary of soil boring observations. Stratigraphy and bedrock depth are based upon the boring logs in Appendix A. Estimated depth to groundwater is based upon visual observations during soil borings.

3.1.2.1 Soil Borings - AOC-1: Power House and Former Coal Storage Area

Subsurface sediments in AOC-1 consist of fill comprised of brick, rock fragments, and silts/sands/gravels, underlain by glacial till. Slag, coal, and coal ash were observed sporadically throughout the upper portions of the subsurface profile. Depth to bedrock is estimated to range between 4-22+ feet below grade, depending on elevation. Depth to groundwater was between 7-11 feet below grade.

Field indications of petroleum-impacted soil were observed in three borings within AOC-1. Free product in acetate liners/soil samples and elevated PID readings were observed at depths ranging between 6-12 feet below grade in borings PH-2, PH-4, and PH-11. All three borings are located

within the footprint of the two former ASTs and the associated concrete containment area that were removed from the Site in 2011. Depth to groundwater in the vicinity of the former ASTs/containment area was between 7-11 feet below grade.

3.1.2.2 Soil Borings - AOC-2: Auto Garage Area

Subsurface sediments in AOC-2 consist of clay over sand/sandy till. Clay layer thickness ranged from 3-8 feet; at AG-6 and AG-8 the clay was absent. In borings AG-1, AG-5, AG-6, AG-8, AG-9, and AG-12, coal fragments and/or slag (maximum thickness of 2 feet) were encountered near the surface. Depth to bedrock is estimated at between 10-20+ feet below grade. Depth to groundwater was between 3.75-15 feet below grade.

3.1.2.3 Soil Borings - AOC-3: Car Wash Area

Subsurface sediments in AOC-3 consist of brown sandy soil to a depth of approximately 20 feet below grade. At one location (CW-3), sediment appeared to be coarser and consisted predominately of gravel. A thin layer of coal ash (approximately 1-2 feet thick) was observed within the upper 5 feet of subsurface sediments at borings CW-2 and CW-6. Depth to bedrock is estimated at 24+ feet below grade. Depth to groundwater was between 14-19.75 feet below grade.

3.1.2.4 Soil Borings - AOC-4: Fire Station Fuel Storage and Dispensing Area

Subsurface sediments in AOC-4 consist of coal ash over glacial till. Coal ash was found in the upper 6 feet and was absent in boring FS-3. The depths of the borings were approximately 20 feet below grade, except for FS-3, which was advanced to a total depth of 4.5 feet below grade after drilling through 1.5 feet of gravel and cobbles that may represent fill placed in the area. Depth to bedrock is estimated to be greater than 24 feet below grade. Depth to groundwater was not established in soil borings.

3.1.2.5 Soil Borings - AOC-5: Building 49 Former Gasoline Fueling Station

Subsurface sediments at AOC-5 consisted predominantly of sand/sandy glacial till. One-foot layers of coal ash were encountered in FD-1 and FD-2 within the upper 5 feet. Boring depths ranged between 12-20 feet below grade. Depth to bedrock is estimated be greater than 20 feet below grade. Depth to groundwater was not established in these soil borings.

3.1.2.6 Soil Borings - AOC-6: Mortuary Area

Subsurface sediments in AOC-6 consisted predominantly of sand/sandy glacial till. Sand fill and coal fragments/coal ash were found in the upper 10 feet. Depth to bedrock is estimated to range between 19.5 to 31 feet below grade. Depth to groundwater was 24 feet below grade.

3.1.2.7 Soil Borings - AOC-7: Maintenance Building

Subsurface sediments in AOC-7 consist of brick, fill and sandy glacial till. Depth to bedrock is estimated to range between 10 and greater than 23 feet below grade. Depth to groundwater was 19 feet below grade.

3.1.2.8 Soil Borings Outside the AOC's

Area surrounding AOC-1 (Power House)

- Boring GB-TMW-3 encountered approximately three feet of coal ash, brick, fill, and slag beneath approximately one foot of topsoil. Beneath the fill, to a depth of 20 feet below grade, sandy till with a fine grained component was encountered. Shale was encountered at 20 feet below grade, which may represent the top of bedrock.

- Boring GB-TMW-4 encountered approximately three feet of coal ash and slag beneath approximately three feet of sandy and silty fill soil with coal fragments. This was followed by 12 feet of clayey silt with varied amounts of gravel. The amount of gravel increased significantly in the last two feet of the boring (18 to 20 feet below grade), suggesting possible top of bedrock or close proximity to top of bedrock.

Area surrounding AOC-4 (Fire Station)

- Boring GB-TMW-1and GB-TMW-2 surrounding AOC-4 encountered sandy glacial till extending to 24 and 16 feet below grade respectively.

3.1.3 DIRECTION OF GROUNDWATER FLOW

Depth-to-water measurements were collected from all wells installed on September 11, 2014. Two of the wells, TMW-3 and TMW-4, were dry. The PVC riser at well TMW-4 was found to

be broken; soil had entered the well, likely filling the casing with debris above the water table. Therefore, no depth to groundwater was measured from TMW-4.

The groundwater contour map is shown on Figure 8. In the northern portion of the site the flow direction is predominately to the west, and then curves in a southerly direction in the southern portion of the site. Regionally, groundwater flow is likely to the south and west, in the direction of the Hudson River.

3.2 NATURE AND EXTENT OF CONTAMINATION – ANALYTICAL RESULTS

3.2.1 Standards, Criteria & Guidance

The analytical results were compared to existing NYS regulatory standards, criteria and guidance (SCGs) to identify samples containing analyte levels that may represent a possible threat to human health and/or the environment.

Soil (surface and subsurface) data were compared to soil cleanup objectives contained in Title 6 of the New York State Code of Rules and Regulations (6 NYCRR) Subpart 375-6.8, Remedial Program Soil Cleanup Objectives.

Groundwater analytical data were compared to standards contained in 6NYCRR Part 703 Groundwater Standards and Guidance Values [NYSDEC Division of Water Technical and Operational Guidance Series (TOGS 1.1.1) for the Ambient Water Quality Standards and Guidance Values and Groundwater Effluent Limitations dated June 1998 (Amended April 2000 and June 2004)]

Soil vapor analytical data were compared to the NYSDOH guidance values outlined in NYSDOH Final Guidance on Soil Vapor Intrusion (October 2006) Matrix 1 and Matrix 2 values, and Indoor Air Median Concentration and Indoor Air 99th Percentile limits.

3.2.2 SOIL RESULTS

Soil sample results were tabulated against the 6NYCRR Part 375-6 Restricted-Residential Use Soil Cleanup Objectives (RRSCOs). Soil sampling locations are shown on Figures 4 & 5.

The number of samples collected and the number of sampling locations is described in each AOC summary. Note that not all soil samples were analyzed for all parameters.

3.2.2.1 Soil Results - AOC-1: Power House and Former Coal Storage Area

Analytical findings of the soil investigation in AOC-1 are summarized below. A complete summary of analytical results for AOC-1 are presented in Tables 1A through 1D. A total of 94 soil samples were collected from 33 locations, including 63 surface soil samples (between 0-2 feet below grade) and 31 subsurface samples (greater than 2 feet below grade).

- Contaminant concentrations exceeding RRSCOs were detected in 44 of 94 soil samples (30 samples from between 0-2 feet below grade; 14 samples from greater than 2 feet below grade) from 33 soil borings;
- One or more VOCs were detected in 46 of 84 soil samples collected and analyzed for these compounds within AOC-1. VOCs were not detected at concentrations exceeding the RRSCOs;
- One or more SVOCs were detected in 46 of 89 soil samples collected and analyzed for these compounds within AOC-1. SVOCs were detected in 13 samples at concentrations exceeding the RRSCOs (10 samples from between 0-2 feet below grade; 3 samples from greater than 2 feet below grade). All of which are PAHs; Total PAH concentrations ranged from 0.454 to 71.32 mg/kg. SVOCs detected exceeding RRSCOs were as follows:

  - Benzo(a)anthracene was detected in 6 samples (5 samples from between 0-2 feet below grade; 1 sample from greater than 2 feet below grade) exceeding the RRSCO of 1.0 mg/kg, at concentrations ranging from 1.05 mg/kg to 6.28 mg/kg;

  - Benzo(a)pyrene was detected in 5 samples (each from between 0-2 feet below grade) exceeding the RRSCO of 1.0 mg/kg, at concentrations ranging from 1.16 mg/kg to 5.87 mg/kg;

  - Benzo(b)fluoranthene was detected in 4 samples (each from between 0-2 feet below grade) exceeding the RRSCO of 1.0 mg/kg, at concentrations ranging from 1.61 mg/kg to 6.69 mg/kg;

- Benzo(k)fluoranthene was detected in 1 sample (from between 0-2 feet below grade) exceeding the RRSCO of 3.9 mg/kg, at a concentration of 4.02 mg/kg;

- Chrysene was detected in 2 samples (1 sample from between 0-2 feet below grade; 1 sample from greater than 2 feet below grade) exceeding the RRSCO of 3.9 mg/kg, at concentrations of 5.03 mg/kg and 6.14 mg/kg;

- Dibenz(a,h)anthracene was detected in 3 samples (each from between 0-2 feet below grade) exceeding the RRSCO of 0.33 mg/kg, at concentrations ranging from 0.537 mg/kg to 1.36 mg/kg;

- Indeno(1,2,3-c,d)pyrene was detected in 13 samples (10 samples from between 0-2 feet below grade; 2 samples from greater than 2 feet below grade) exceeding the RRSCO of 0.50 mg/kg, at concentrations ranging from 0.5 mg/kg to 4.36 mg/kg;

- One or more total metals were detected in each of the 94 soil samples collected and analyzed for these compounds within AOC-1. One or more metals were detected in 37 samples at concentrations exceeding the RRSCOs (24 samples from between 0-2 feet below grade; 13 samples from greater than 2 feet below grade). Metals detected exceeding RRSCOs were as follows:

  - Arsenic was detected in 34 samples (21 samples from between 0-2 feet below grade; 13 samples from greater than 2 feet below grade) exceeding the RRSCO of 16 mg/kg, at concentrations ranging from 17 mg/kg to 199 mg/kg;

  - Barium was detected in 1 sample (from between 0-2 feet below grade) exceeding the RRSCO of 400 mg/kg, at a concentration of 1,070 mg/kg;

  - Lead was detected in 1 sample (from between 0-2 feet below grade) exceeding the RRSCO of 400 mg/kg, at a concentration of 415 mg/kg;

  - Manganese was detected in 5 samples (each from between 0-2 feet below grade) exceeding the RRSCO of 2,000 mg/kg, at concentrations ranging from 2,150 mg/kg to 4,990 mg/kg;

  - Mercury was detected in 1 sample(from between 0-2 feet below grade) exceeding the RRSCO of 0.81 mg/kg, at a concentration of 2.32 mg/kg;

- One or more pesticides were detected in 16 of the 30 soil samples collected and analyzed for these compounds within AOC-1. Pesticides were not detected at concentrations exceeding the RRSCOs;

- The herbicide Silvex (2,4,5-TP) was not detected within any of the 26 soil samples collected and analyzed for this compound in AOC-1; and,

- One or more PCBs were detected in 7 of the 30 soil samples collected and analyzed for these compounds within AOC-1. PCBs were not detected at concentrations exceeding RRSCOs.

3.2.2.2 Soil Results - AOC-2: Auto Garage Area

Analytical findings of the soil investigation in AOC-2 are summarized below. A complete summary of analytical results for AOC-2 are presented in Tables 2A through 2D. A total of 46 soil samples were collected from 14 soil locations, including 16 surface soil samples (between 0-2 feet below grade) and 30 subsurface samples (greater than 2 feet below grade).

- Contaminant concentrations exceeding RRSCOs were detected in 4 of 46 soil samples (3 samples from between 0-2 feet below grade; 1 sample from greater than 2 feet below grade) collected from 14 soil borings;
- One or more VOCs were detected in 19 of 34 soil samples collected and analyzed for these compounds within AOC-2. VOCs were not detected at concentrations exceeding the RRSCOs;
- One or more SVOCs were detected in 5 of 34 soil samples collected and analyzed for these compounds within AOC-2. All of the SVOCs detected were PAHs; total PAH concentrations ranged from 0.496 to 4.88 mg/kg. SVOCs were not detected at concentrations exceeding the RRSCOs;
- One or more total metals were detected in each of the 34 soil samples collected within AOC-2. One or more metals were detected in 4 samples at concentrations exceeding the RRSCOs (3 samples from between 0-2 feet below grade; 1 sample from greater than 2 feet below grade). Metals detected exceeding RRSCOs were as follows:

  - Arsenic was detected in 1 sample (from between 0-2 feet below grade) exceeding the RRSCO of 16 mg/kg, at a concentration of 23.8 mg/kg;

  - Lead was detected in 2 samples (both from between 0-2 feet below grade) exceeding the RRSCO of 400 mg/kg, at concentrations of 439 mg/kg and 1,710 mg/kg;

  - Manganese was detected in 1 sample (from greater than 2 feet below grade) exceeding the RRSCO 2,000 mg/kg, at a concentration of 2,320 mg/kg;
- One or more pesticides were detected in 6 of the 26 soil samples collected and analyzed for these compounds within AOC-2. Pesticides were not detected at concentrations exceeding the RRSCOs;

- The herbicide Silvex (2,4,5-TP) was not detected within any of the 26 soil samples collected and analyzed for this compound in AOC-2; and,
- One or more PCBs were detected in 1 of the 34 soil samples collected and analyzed for these compounds within AOC-2. PCBs were not detected at concentrations exceeding the RRSCOs.

3.2.2.3 Soil Results - AOC-3: Car Wash Area

Analytical findings of the soil investigation in AOC-3 are summarized below. A complete summary of analytical results for AOC-3 are presented in Tables 3A through 3D. A total of 12 soil samples were collected from 5 soil locations, including 2 surface soil samples (between 0-2 feet below grade) and 10 subsurface samples (greater than 2 feet below grade).

- No contaminant concentrations exceeding RRSCOs were detected in any of the 12 soil samples;
- One or more VOCs were detected in 8 of 12 soil samples collected and analyzed for these compounds within AOC-3. VOCs were not detected at concentrations exceeding the RRSCOs;
- One or more SVOCs were detected in 1 of 12 soil samples collected and analyzed for these compounds within AOC-3. All SVOCs detected were PAHs (total concentration 1.30 ppm). SVOCs were not detected at concentrations exceeding the RRSCOs;
- One or more total metals were detected in each of the 12 soil samples collected within AOC-3. Metals were not detected at concentrations exceeding the RRSCOs;
- One or more pesticides were detected in 3 of 6 soil samples collected and analyzed for these compounds within AOC-3. Pesticides were not detected at concentrations exceeding the RRSCOs ;
- The herbicide Silvex (2,4,5-TP) was not detected within any of the 6 soil samples collected and analyzed for this compound in AOC-3; and,
- PCBs were not detected within any of the 6 soil samples collected and analyzed for this compound in AOC-3.

3.2.2.4 Soil Results - AOC-4: Fire Station Fuel Storage and Dispensing Area

Analytical findings of the soil investigation in AOC-4 are summarized below. A complete summary of analytical results for AOC-4 are presented in Tables 4A through 4D. A total of 11

soil samples were collected from 4 locations, including 6 surface soil samples (between 0-2 feet below grade) and 5 subsurface samples.

- Contaminant concentrations exceeding RRSCOs were detected in 4 of 11 soil samples collected (each between 0-2 feet below grade) from 4 soil borings;
- VOCs were not detected within any of the 11 soil samples collected and analyzed for these compounds in AOC-4;
- One or more SVOCs were detected in 5 of 11 soil samples collected and analyzed for these compounds within AOC-4. All of the SVOCs detected were PAHs; total PAH concentrations ranged from 4.71 to 129.38 mg/kg. SVOCs were detected in 3 samples (each between 0-2 feet below grade) at concentrations exceeding the RRSCOs; SVOCs detected exceeding RRSCOs were as follows:

  - Benzo(a)anthracene was detected in 2 samples (both between 0-2 feet below grade) exceeding the RRSCO of 1.0 mg/kg, at concentrations of 5.21 mg/kg and 12.1 mg/kg;

  - Benzo(a)pyrene was detected in 2 samples (both between 0-2 feet below grade) exceeding the RRSCO of 1.0 mg/kg, at concentrations of 5.81 mg/kg and 12.8 mg/kg;

  - Benzo(b)fluoranthene was detected in 2 samples (both between 0-2 feet below grade) exceeding the RRSCO of 1.0 mg/kg, at concentrations of 15.3 mg/kg and 6.44 mg/kg;

  - Benzo(k)fluoranthene was detected in 2 samples (both between 0-2 feet below grade) exceeding the RRSCO of 3.9 mg/kg, at concentrations of 4.4 mg/kg and 8.88 mg/kg;

  - Chrysene was detected in 2 samples (both between 0-2 feet below grade) exceeding the RRSCO of 3.9 mg/kg, at concentrations of 4.73 mg/kg and 10.9 mg/kg;

  - Dibenz(a,h)anthracene was detected in 2 samples (both between 0-2 feet below grade) exceeding the RRSCO of 3.3 mg/kg, at concentrations of 1.65 mg/kg and 3.81 mg/kg;

  - Indeno(1,2,3-c,d)pyrene was detected in 3 samples (each between 0-2 feet below grade) exceeding the RRSCO of 0.5 mg/kg, at concentrations ranging from 0.567 mg/kg to 12.4 mg/kg;
- One or more total metals were detected in each of the 11 soil samples collected within AOC-4. One or more metals were detected in 1 sample(from between 0-2 feet below grade) at a concentration exceeding the RRSCO. Metals detected exceeding RRSCOs were as follows:

  - Arsenic was detected in 1 sample (from between 0-2 feet below grade) exceeding the RRSCO of 16 mg/kg, at a concentration of 18.8 mg/kg;

- One or more pesticides were detected in 5 of 8 soil samples collected and analyzed for these compounds within AOC-4. Pesticides were not detected at concentrations exceeding the RRSCOs;
- The herbicide Silvex (2,4,5-TP) was not detected within any of the 6 soil samples collected and analyzed for this compound in AOC-4; and,
- One or more PCBs were detected in 1 of 8 soil samples collected and analyzed for these compounds within AOC-4. PCBs were not detected at concentrations exceeding the RRSCOs.

3.2.2.5 Soil Results - AOC-5: Building 49 Former Gasoline Fueling Station

Analytical findings of the soil investigation in AOC-5 are summarized below. A complete summary of analytical results for AOC-5 are presented in Tables 5A through 5D. A total of 10 soil samples were collected from 4 locations, including 5 surface soil samples (between 0-2 feet below grade) and 5 subsurface samples (greater than 2 feet below grade).

- Contaminant concentrations exceeding RRSCOs were detected in 1 of 10 soil samples collected (from greater than 2 feet below grade) from 4 soil borings;
- One or more VOCs were detected in 2 of 10 soil samples collected and analyzed for these compounds within AOC-5. VOCs were not detected at concentrations exceeding the RRSCOs;
- One or more SVOCs were detected in 1 of 10 soil samples collected and analyzed for these compounds within AOC-5. All of the SVOCs were PAHs, with the exception of 2-Methylnaphthalene. PAH concentrations were 5.24 mg/kg. SVOCs were not detected at concentrations exceeding the RRSCOs;
- One or more total metals were detected in each of the 10 soil samples collected within AOC-5. One or more metals were detected in 1 sample (from greater than 2 feet below grade) at a concentration exceeding the RRSCO. Metals detected exceeding RRSCOs were as follows:

  - Arsenic was detected in 1 sample (from greater than 2 feet below grade) exceeding the RRSCO of 16 mg/kg, at a concentration of 23.7 mg/kg;
- One or more pesticides were detected in 3 of the 4 soil samples collected and analyzed for these compounds within AOC-5. Pesticides were not detected at concentrations exceeding the RRSCOs;

- The herbicide Silvex (2,4,5-TP) was not detected within any of the 4 soil samples collected and analyzed for this compound in AOC-5; and,
- PCBs were not detected within any of the 4 soil samples collected and analyzed for this compound in AOC-5.

3.2.2.6 Soil Results - AOC-6: Mortuary Area

Analytical findings of the soil investigation in AOC-6 are summarized below. A complete summary of analytical results for AOC-6 are presented in Tables 6A through 6D. A total of 4 soil samples were collected from 2 locations, including 2 surface soil samples (between 0-2 feet below grade) and 2 subsurface samples (greater than 2 feet below grade).

- No contaminant concentrations exceeding RRSCOs were detected in any of the 4 soil samples;
- One or more VOCs were detected in 2 of 4 soil samples collected and analyzed for these compounds within AOC-6. VOCs were not detected at concentrations exceeding the RRSCOs;
- One or more SVOCs were detected in 2 of 4 soil samples collected and analyzed for these compounds within AOC-6. All of the SVOCs were PAHs, with the exception of Benzyl Butyl Phthalate. SVOCs were not detected at concentrations exceeding the RRSCOs;
- One or more total metals were detected in each of the 4 soil samples collected within AOC-6. Metals were not detected at concentrations exceeding the RRSCOs;
- One or more pesticides were detected in 1 of the 2 soil samples collected and analyzed for these compounds within AOC-6. Pesticides were not detected at concentrations exceeding the RRSCOs;
- The herbicide Silvex (2,4,5-TP) was not detected within any of the 2 soil samples collected and analyzed for this compound in AOC-6; and,
- One or more PCBs were detected in 1 of the 2 soil samples collected and analyzed for these compounds within AOC-6. PCBs were not detected at concentrations exceeding the RRSCOs.

3.2.2.7 Soil Results - AOC-7: Maintenance Building

Analytical findings of the soil investigation in AOC-7 are summarized below. A complete summary of analytical results for AOC-7 are presented in Tables 7A through 7D. A total of 6 soil samples were collected from 4 locations, including 2 surface soil samples (between 0-2 feet below grade) and 4 subsurface samples (greater than 2 feet below grade).

- Contaminant concentrations exceeding RRSCOs were detected in 1 of 6 soil samples collected (from between 0-2 feet below grade) from 4 soil borings;
- One or more VOCs were detected in 1 of 6 soil samples collected and analyzed for these compounds within AOC-7. VOCs were not detected at concentrations exceeding the RRSCOs;
- One or more SVOCs were detected in 2 of 6 soil samples collected and analyzed for these compounds within AOC-7. All of the SVOCs detected were PAHs; total PAH concentrations ranged from 0.202 to 0.365 mg/kg. SVOCs were not detected at concentrations exceeding the RRSCOs;
- One or more total metals were detected in each of the 6 soil samples collected within AOC-7. One or more metals were detected in 1 sample (from between 0-2 feet below grade) at a concentration exceeding the RRSCO. Metals detected exceeding RRSCOs were as follows:

  - Arsenic was detected in 1 sample (from between 0-2 feet below grade) exceeding the RRSCO of 16 mg/kg, at a concentration of 33.5 mg/kg;
- One or more pesticides were detected in 2 of the 6 soil samples collected and analyzed for these compounds within AOC-7. Pesticides were not detected at concentrations exceeding the RRSCOs;
- The herbicide Silvex (2,4,5-TP) was not detected within any of the 5 soil samples collected and analyzed for this compound in AOC-7; and,
- PCBs were not detected within any of the 6 soil samples collected and analyzed for this compound in AOC-7.

3.2.2.8 Soil Results - Additional samples collected outside the AOC's

Soil samples were collected from outside the above-listed AOCs. These additional soil samples are separated into two groups:

- Soil samples collected during installation of temporary monitoring wells; and

- Soil samples collected from surface areas to evaluate soil quality outside the AOCs listed above.

Analytical findings of soil investigations collected outside the AOC's are summarized below. A complete summary of analytical results are presented in Tables 8A-8D and 9A-9D.

Temporary Monitoring Well Locations

A summary of the analytical results of the soil investigation in areas where temporary monitoring wells were installed is provided below. A complete summary of analytical results are presented in Tables 8A through 8D. A total of 6 soil samples were collected from 5 locations. All samples from monitoring well locations were collected from greater than 2 feet below grade.

- Contaminant concentrations exceeding RRSCOs were detected in 1 of 6 soil samples collected from 5 soil borings;
- One or more VOCs were detected in 2 of 5 soil samples collected and analyzed for these compounds from temporary monitoring well locations. VOCs were not detected at concentrations exceeding the RRSCOs;
- SVOCs were not detected within any of the 5 soil samples collected and analyzed for these compounds from temporary monitoring well locations;
- One or more total metals were detected in each of the 5 soil samples collected and analyzed for these compounds from temporary monitoring well locations. One or more metals were detected in 1 sample at a concentration exceeding the RRSCO. Metals detected exceeding RRSCOs were as follows:

  - Arsenic was detected in 1 sample (from greater than 2 feet below grade) exceeding the RRSCO of 16 mg/kg, at a concentration of 22.8 mg/kg;
- One or more pesticides were detected in 1 of the 5 soil samples collected and analyzed for these compounds from temporary monitoring well locations. Pesticides were not detected at concentrations exceeding the RRSCOs;
- The herbicide Silvex (2,4,5-TP) was not detected within any of the 5 soil samples collected and analyzed for these compounds from temporary monitoring well locations; and,
- PCBs were not detected within any of the 5 soil samples collected and analyzed for these compounds from temporary monitoring well locations.

Surface Soil Outside the AOC's

A summary of the analytical results of the soil investigation from surface samples collected outside the AOC's is provided below. A complete summary of analytical results are presented in Tables 9A through 9D. A total of 54 surface soil samples were collected from 28 locations. All surface soil samples were collected from between 0-2 feet below grade.

- Contaminant concentrations exceeding RRSCOs were detected in 8 of 54 soil samples collected from 28 soil borings;
- One or more VOCs were detected in 9 of 41 soil samples collected and analyzed for these compounds from surface areas outside the AOC's. VOCs were not detected at concentrations exceeding the RRSCOs;
- One or more SVOCs were detected in 26 of 53 soil samples collected and analyzed for these compounds from surface areas outside the AOC's. SVOCs were detected in 3 samples at concentrations exceeding the RRSCOs. All of the SVOCs detected were PAHs; total PAH concentrations ranged from 0.338 to 258.88 mg/kg. SVOCs detected exceeding RRSCOs were as follows:

  - Benzo(a)anthracene was detected in 2 samples exceeding the RRSCO of 1.0 mg/kg, at concentrations of 1.83 mg/kg and 2.15 mg/kg;

  - Benzo(a)pyrene was detected in 2 samples exceeding the RRSCO of 1.0 mg/kg, at concentrations of 2.11 mg/kg and 2.35 mg/kg;

  - Benzo(b)fluoranthene was detected in 2 samples exceeding the RRSCO of 1.0 mg/kg, at concentrations of 1.86 mg/kg and 2.61 mg/kg;

  - Dibenz(a,h)anthracene was detected in 2 samples exceeding the RRSCO of 0.33 mg/kg, at concentrations of 0.414 mg/kg and 0.563 mg/kg;

  - Indeno(1,2,3-c,d)pyrene was detected in 3 samples exceeding the RRSCO of 0.5 mg/kg, at concentrations ranging from 0.552 mg/kg to 2.53 mg/kg;
- One or more total metals were detected in each of the 54 soil samples soil samples collected and analyzed for these compounds from surface areas outside the AOC's. One or more metals were detected in 6 samples at concentrations exceeding the RRSCOs. Metals detected exceeding RRSCOs were as follows:

  - Arsenic was detected in 3 samples exceeding the RRSCO of 16 mg/kg, at concentrations ranging from 16.8 mg/kg to 46.8 mg/kg;

  - Cadmium was detected in 1 sample exceeding the RRSCO of 4.3 mg/kg, at a concentration of 6.11 mg/kg;

- Manganese was detected in 2 samples exceeding the RRSCO of 2,000 mg/kg, at concentrations of 2,140 mg/kg and 3,540 mg/kg;

- Mercury was detected in 1 sample exceeding the RRSCO of 0.81 mg/kg, at a concentration of 1.89 mg/kg;

- One or more pesticides were detected in 36 of the 53 soil samples collected and analyzed for these compounds from surface areas outside the AOC's. Pesticides were not detected at concentrations exceeding the RRSCOs;
- The herbicide Silvex (2,4,5-TP) was not detected within any of the 36 soil samples collected and analyzed for these compounds from surface areas outside the AOC's; and,
- One or more PCBs were detected in 4 soil samples collected and analyzed for these compounds from surface areas outside the AOC's. PCBs were not detected at concentrations exceeding RRSCOs.

3.2.3 GROUNDWATER RESULTS

Groundwater sample results were tabulated against the Class GA groundwater standards defined in 6NYCRR Part 700-705 and NYSDEC Division of Water Technical and Operational Guidance Series 1.1.1. A summary of the analytical results of the groundwater investigation is provided below. A complete summary of analytical results are presented in Tables 10A through 10D. A total of 29 groundwater samples were collected from 15 locations. Groundwater sampling locations are shown on Figure 6.

Based on discussions with the project laboratory, the achievable detection limit according to USEPA Methods 8270 and 8081 for several of the SVOCs and pesticides, respectively, is greater than the Class GA groundwater standard. The standard procedure for USEPA Method 8270 results in a detection limit of 10 µg/L for SVOCs as compared to an allowable groundwater standard of as low as 0.002 µg/L for certain SVOCs. The standard procedure for Method 8081 results in a detection limit of 0.1 µg/L for pesticides as compared to an allowable groundwater standard as low as 0.002 µg/L for certain pesticides. Supplemental samples were collected and analyzed by the laboratory with additional dilutions in attempt to achieve a detection limit of 5 µg/L for Method 8270; and a detection limit of 0.01 µg/L for Method 8081.

- Contaminant concentrations exceeding Class GA standards were detected in 13 of 29 groundwater samples collected from 15 site-wide groundwater monitoring wells.
- One or more VOCs were detected in 7 of the 15 groundwater samples collected and analyzed for these compounds. VOCs were not detected at concentrations exceeding Class GA standards;

- One or more SVOCs were detected in 4 of the 20 groundwater samples collected and analyzed for these compounds. SVOCs were not detected at concentrations exceeding the detection limit;
- One or more total metals were detected in each of the 18 groundwater samples collected and analyzed for these compounds. One or more total metals were detected in 12 samples at concentrations exceeding the Class GA standards. Metals detected exceeding Class GA standards were as follows:

  - Cadmium was detected in 2 samples exceeding the Class GA standard of 5 µg/L, at concentrations of 7.51 µg/L and 10.2 µg/L;

  - Iron was detected in 7 samples exceeding the Class GA standard of 30 µg/L, at concentrations ranging between 31.2 µg/L and 22,900 µg/L;

  - Manganese was detected in 9 samples exceeding the Class GA standard of 30 µg/L, at concentrations ranging between 30.1 µg/L and 17,400 µg/L;

  - Nickel was detected in 2 samples exceeding the Class GA standard of 100 µg/L, at concentrations of 206 µg/L and 217 µg/L;

  - Sodium was detected in 5 samples exceeding the Class GA standard of 20,000 µg/L, at concentrations ranging between 21,400 µg/L and 82,300 µg/L;
- One or more pesticides were detected in 8 of the 18 groundwater samples collected and analyzed for these compounds. Although the detection limit exceeded the maximum contaminant limit for some compounds, lower detection limits are not achievable by USEPA Method 8081. One or more pesticides were detected in 2 samples at concentrations exceeding the Class GA standards. Pesticides detected exceeding Class GA standards were as follows:

  - Alpha BHC (Alpha Hexachlorocyclohexane) was detected in 1 sample exceeding the Class GA standard of 0.01 µg/L, at a concentration of 0.492 µg/L;

  - Beta BHC (Beta Hexachlorocyclohexane) was detected in 1 sample exceeding the Class GA standard of 0.04 µg/L, at a concentration of 0.0653 µg/L;

  - Delta BHC (Delta Hexachlorocyclohexane) was detected in 2 samples exceeding the Class GA standard of 0.04 µg/L, at concentrations ranging between 0.0638 µg/L and 0.0848 µg/L.
- The herbicide Silvex (2,4,5-TP) was not detected in any of the groundwater samples collected and analyzed for this compound; and,

- PCBs were not detected in any of the groundwater samples collected and analyzed for these compounds;

3.2.4 VAPOR RESULTS

Vapor sampling (sub-slab and soil vapor) results were tabulated against two criteria outlined in New York State Department of Health (NYSDOH) "Guidance for Evaluating Soil Vapor Intrusion in the State of New York" dated October 2006:

1. Median result and 99th percentile concentrations listed in Appendix C.1 (results from the 2003 NYSDOH Study of Volatile Organic Chemicals in Air of Fuel Oil Heated Homes)
2. Section 3.4.2 Decision Matrices for Carbon Tetrachloride, Tetrachloroethene, 1,1,1-Trichloroethane and Trichloroethene

A summary of the findings of the vapor investigation is provided below. A complete summary of analytical results is presented in Table 11. A total of 25 vapor samples were collected from 20 locations. Vapor sampling locations are shown on Figure 7.

- None of the vapor samples contained concentrations of contaminants in excess of the action levels in Section 3.4.2 Decision Matrices for Carbon Tetrachloride, Tetrachloroethene, 1,1,1-Trichloroethane and Trichloroethene.

- Contaminant concentrations exceeding NYSDOH Indoor Air 99th Percentile concentrations were detected in 15 of 25 vapor samples collected from 20 site-wide locations.

- One or more VOCs were detected in each of the 25 samples at concentrations exceeding the NYSDOH Indoor Air Median concentrations. One or more VOCs were detected in 15 of 25 samples at concentrations exceeding the NYSDOH Indoor Air 99th Percentile concentrations. VOCs detected exceeding NYSDOH Indoor Air 99th Percentile concentrations were as follows:

  - 1,2,4-trimethylbenzene was detected in 1 sample exceeding the 99th Percentile concentration of 35 µg/m³, at a concentration of 37 µg/m³;

  - 1,2-dichloroethane was detected in 3 samples exceeding the 99th Percentile concentration of 0.4 µg/m³, at concentrations ranging between 0.45 µg/m³ and 1.2 µg/m³;

  - 2-hexanone was detected in 5 samples exceeding the 99th Percentile concentration of 16 µg/m³, at concentrations ranging between 34 µg/m³ and 77 µg/m³;

- Acetone was detected in 7 samples exceeding the 99th Percentile concentration of 200 µg/m³, at concentrations ranging between 560 µg/m³ and 3,400 µg/m³ in samples collected in July 2014; based on our review of potential sources of this compound, and site characterization data, it is our professional opinion that these detections are either an artifact from the laboratory analysis, or from the process used to install sample collection ports. This position is supported by the lack of Acetone detected in samples collected in December 2014.

- Chloroform was detected in 1 sample exceeding the 99th Percentile concentration of 13 µg/m³, at a concentration of 22 µg/m³;

- m- and p- xylenes were detected in 5 samples exceeding the 99th Percentile concentration of 46 µg/m³, at concentrations ranging between 55 µg/m³ and 67 µg/m³;

- Methyl ethyl ketone (2-butanone) was detected in 3 samples exceeding the 99th Percentile concentration of 79 µg/m³, at concentrations ranging between 110 µg/m³ and 280 µg/m³;

- Styrene was detected in 10 samples exceeding the 99th Percentile concentration of 6.2 µg/m³, at concentrations ranging between 7 µg/m³ and 15 µg/m³;

- Toluene was detected in 2 samples exceeding the 99th Percentile concentration of 300 µg/m³, at concentrations ranging between 550 µg/m³ and 5900 µg/m³.

3.2.5 DATA VALIDATION

Data Usability Summary Reports (DUSRs) have been created as part of the ASP-B Deliverables (Appendix H). Third party data validation services and DUSRs were prepared by KR Applin & Associates of Dansville, New York. The resume and statement of qualifications (SOQ) for the third party data validator are attached in Appendix F.

The DUSRs prepared by the data validator constitute a review of 320 samples within which a total of 43,550 constituents were quantified by the laboratory. Of these, the data validator determined that all except 718 of the 43,550 results are valid and are considered usable, an overall data usability rate of 98.35%.

Of the 718 constituents qualified by the data validator as rejected, 275 (38.3%) were for 1,4-dioxane; 226 (31.47%) were for various other VOCs; 85 (11.83%) were for hexavalent chromium; 15 (2.09%) were for zinc; and 27 (3.76%) were for manganese. The remaining rejected data were for detection of traces of sodium or calcium in blanks, and trace lab artifacts in samples or method blanks for samples in which tentatively identified compounds (TICs) were present.

Data usability issues for rejected 1,4-dioxane, VOCs, hexavalent chromium, zinc and blank data are discussed below.

1,4-Dioxane

The internal standard recoveries were outside the specified calibration control limits, most likely due to significant matrix interference. This issue is related to the heterogeneity or other properties of the samples themselves and not the laboratory procedure, and therefore, is unavoidable. It is notable that in other samples where internal standard QC limits were achieved for 1,4-dioxane, none of the samples contained detectable quantities of that constituent.

VOCs

Internal standard target limits were not achieved, presumably due to matrix interference. This issue is related to the heterogeneity or other properties of the samples themselves and not the laboratory procedure, and therefore, is unavoidable. Matrix interference would mask only very low traces of target constituents, and, therefore, is not considered to have produced false negatives for the samples at issue here.

Hexavalent Chromium

Internal standard target limits were not achieved, presumably due to low matrix spike recovery. This issue is related to the properties of the samples themselves and not the laboratory procedure, and therefore, is unavoidable. Matrix interference could potentially mask the presence of very low concentrations of hexavalent chromium, if present.

Zinc

Matrix spike recovery values were outside the specified control limits, apparently due to significant matrix interference. Non-homogeneous soils with inherently variable composition often exhibit this type of QC bias. The issue is related to the properties of the samples themselves and not the laboratory, and therefore, is unavoidable.

Blank Contamination

Compounds were detected in some of QA method blanks; however, the associated sample results were greater than the concentration detected in the blanks or were non-detect.

3.3 SUMMARY OF REMEDIAL INVESTIGATION RESULTS

The following subsections present a summary of the RI results for each AOC, in addition to a subsection summarizing results for outside the AOCs.

3.3.1 AOC-1: POWER HOUSE AND FORMER COAL STORAGE AREA

Stratigraphy

Subsurface sediments consisted predominantly of fill composed of brick and rock fragments and silts, sands, and gravels underlain by glacial till. Depth to bedrock is estimated at 3” to greater than 22 feet below grade. Depth to groundwater in the vicinity of the former tank containment area is between 7 and 11 feet below grade. Slag, coal, and coal ash were observed sporadically throughout the upper portions of the subsurface profile.

Soil Quality

Contaminants were detected in soil at concentrations exceeding RRSCOs, including several SVOCs, all of which are Polycyclic Aromatic Hydrocarbons (PAHs), and metals, including arsenic, lead, and mercury.

- Surface Soil: Metals and SVOCs were detected at concentrations exceeding RRSCOs.
- Subsurface Soil: Metals and SVOCs were detected at concentrations exceeding RRSCOs.
- Petroleum-impacted soil was observed in three borings (free product in acetate liners, elevated PID readings), including PH-2, PH-4, and PH-11. All three borings are located within the footprint of the former ASTs that were removed from the Site in 2011. Figures 13, 14 and 15 depict the lateral and vertical extent of grossly-contaminated media.

Groundwater Quality

Contaminants were detected in groundwater at concentrations exceeding Class GA groundwater standards including cadmium, iron, manganese and nickel. Petroleum-related hydrocarbons were not detected in groundwater samples near the former ASTs. No VOCs, SVOCs, pesticides, herbicides or PCBs were detected at concentrations exceeding Class GA groundwater standards.

Vapor Quality

No VOCs were detected at concentrations exceeding the applicable NYSDOH Matrix Values which would require additional evaluation or mitigation. Contaminants were detected in soil vapor samples at concentrations exceeding NYSDOH Indoor Air 99th Percentile Concentrations were identified for several VOCs.

A complete summary of analytical results for AOC-1 are presented in Tables 1A through 1D.

3.3.2 AOC-2: AUTO GARAGE AREA

Stratigraphy

Subsurface sediments consisted predominantly of clay over sand/sandy till. Coal fragments and/or slag (maximum thickness of 2 feet) was encountered near the surface in several borings. Depth to groundwater was 3.75 to 15 feet below grade.

Soil Quality

Only metals were detected in soil at concentrations exceeding RRSCOs. No VOCs, SVOCs pesticides, herbicides or PCBs were detected in soil at concentrations exceeding RRSCOs.

- Surface Soil: Only one metal (lead) was detected at a concentration exceeding RRSCOs.
- Subsurface Soil: Only lead was detected at concentrations exceeding RRSCOs.

Groundwater Quality

Three pesticides: alpha BHC (alpha hexachlorocyclohexane), beta BHC (beta hexachlorocyclohexane) and delta BHC were detected in one groundwater sample at concentrations exceeding Class GA groundwater standards. Pesticides were detected in surface

soil samples in the vicinity of this groundwater monitoring well; considering the low concentrations detected in soil and the relative insolubility of these compounds, we believe these pesticides were pushed into the subsurface by the drilling technique used to install the monitoring well.

Vapor Quality

No VOCs were detected at concentrations exceeding the applicable NYSDOH Matrix Values which would require additional evaluation or mitigation. Contaminants were detected in soil vapor samples at concentrations exceeding NYSDOH Indoor Air 99th Percentile Concentrations were identified for several VOCs. Acetone was detected at significantly elevated concentrations, no acetone was detected in soil samples in this area, suggesting acetone was introduced to the sample during laboratory analysis or from the materials used for installation of the vapor sampling implant.

A complete summary of analytical results for AOC-2 are presented in Tables 2A through 2D.

3.3.3 AOC-3: CAR WASH AREA

Stratigraphy

Unconsolidated sediment in this area consisted of brown sandy soil to a depth of at least 20 feet below grade, coal ash was observed in some locations. Depth to groundwater was 14 to 19.75 feet below grade.

Soil Quality

No VOCs, SVOCs, metals, pesticides, herbicides or PCBs were detected in soil at concentrations exceeding RRSCOs.

- Surface Soil: No analytes were detected at concentrations above their respective RRSCO.
- Subsurface Soil: No analytes were detected at concentrations above their respective RRSCO.

Groundwater Quality

Only two metals, iron and sodium, were detected at concentrations exceeding Class GA groundwater standards. No VOCs, SVOCs, pesticides, herbicides or PCBs were detected in soil at concentrations exceeding Class GA groundwater standards.

Vapor Quality

No VOCs were detected at concentrations exceeding the applicable NYSDOH Matrix Values which would require additional evaluation or mitigation. Contaminants were detected in soil vapor samples at concentrations exceeding NYSDOH Indoor Air 99th Percentile Concentrations were identified for several VOCs.

A complete summary of analytical results for AOC-3 to date are presented in Tables 3A through 3D.

3.3.4 AOC-4: FIRE STATION FUEL STORAGE AND DISPENSING AREA

Stratigraphy

Unconsolidated sediment in this area consists of coal ash over glacial till to a depth of at least 20 feet below grade. Depth to groundwater was not established in soil borings.

Soil Quality

Metals and SVOCs were detected at concentrations exceeding RRSCOs. No VOCs, pesticides, herbicides or PCBs were detected in soil at concentrations exceeding RRSCOs.

- Surface Soil: One metal (arsenic) and multiple SVOCs were detected at concentrations exceeding RRSCOs, all of which are Polycyclic Aromatic Hydrocarbons (PAHs),
- Subsurface Soil: No analytes were detected at concentrations above their respective RRSCO.

Based on our review of potential sources of SVOC compounds, and site characterization data, SVOCs detected in surface soil samples are likely to be attributable to the asphalt covering this area.

Groundwater Quality

Only two metals, manganese and sodium, were detected at concentrations exceeding Class GA groundwater standards. No VOCs, SVOCs, pesticides, herbicides or PCBs were detected at concentrations exceeding Class GA groundwater standards.

Vapor Quality

No VOCs were detected at concentrations exceeding the applicable NYSDOH Matrix Values which would require additional evaluation or mitigation. Contaminants were detected in soil vapor samples at concentrations exceeding NYSDOH Indoor Air 99th Percentile Concentrations were identified for several VOCs.

A complete summary of analytical results for AOC-4 are presented in Tables 4A through 4D.

3.3.5 AOC-5: BUILDING 49 FORMER GASOLINE FUELING STATION

Stratigraphy

Unconsolidated sediment in this area consists of coal ash in the upper 5 feet with sand and sandy glacial till below. Depth to groundwater was not established in soil borings.

Soil Quality

Only arsenic was detected at concentrations exceeding RRSCOs, in one soil sample. No VOCs, SVOCs, pesticides, herbicides or PCBs were detected in soil at concentrations exceeding RRSCOs

- Surface Soil: No analytes were detected at concentrations above their respective RRSCO.
- Subsurface Soil: Only one metal (arsenic) was detected at concentrations exceeding RRSCOs.

Groundwater Quality

No VOCs, SVOCs, metals, pesticides, herbicides or PCBs were detected at concentrations exceeding Class GA groundwater standards.

Vapor Quality

No VOCs were detected at concentrations exceeding the applicable NYSDOH Matrix Values which would require additional evaluation or mitigation. Contaminants were detected in soil vapor samples at concentrations exceeding NYSDOH Indoor Air Median Concentrations were identified for several VOCs.

A complete summary of findings and analytical results for AOC-5 to date are presented in Tables 5A through 5D.

3.3.6 AOC-6: MORTUARY AREA

Stratigraphy

Unconsolidated sediment in this area consists of coal ash in the upper 5 to 10 feet with sand and sandy glacial till below. Depth to bedrock is suspected to be 31 feet below grade; groundwater was encountered at 24 feet below grade.

Soil Quality

No VOCs, SVOCs, metals, pesticides, herbicides or PCBs were detected in soil at concentrations exceeding RRSCOs

- Surface Soil: No analytes were detected at concentrations above their respective RRSCO.
- Subsurface Soil: No analytes were detected at concentrations above their respective RRSCO.

Groundwater Quality

No VOCs, SVOCs, metals, pesticides, herbicides or PCBs were detected at concentrations exceeding Class GA groundwater standards.

Vapor Quality

No VOCs were detected at concentrations exceeding the applicable NYSDOH Matrix Values which would require additional evaluation or mitigation. Contaminants were detected in soil

vapor samples at concentrations exceeding NYSDOH Indoor Air Median Concentrations were identified for several VOCs.

A complete summary of analytical results for AOC-6 to date are presented in Tables 6A through 6D.

3.3.7 AOC-7: MAINTENANCE BUILDING

Stratigraphy

Unconsolidated sediment in this area consists of urban fill and brick overlying sand and sandy glacial till. Refusal was not encountered above 20 feet below grade; groundwater was encountered at 19 feet below grade.

Soil Quality

Only arsenic was detected in one soil sample at concentrations exceeding RRSCOs. No VOCs, SVOCs, pesticides, herbicides or PCBs were detected in soil at concentrations exceeding RRSCOs

- Surface Soil: Only one metal (arsenic) was detected at concentrations exceeding RRSCOs.
- Subsurface Soil: No analytes were detected at concentrations above their respective RRSCO.

Groundwater Quality

Only manganese was detected at concentrations exceeding Class GA groundwater standards. No VOCs, SVOCs, pesticides, herbicides or PCBs were detected at concentrations exceeding Class GA groundwater standards.

Vapor Quality

No VOCs were detected at concentrations exceeding the applicable NYSDOH Matrix Values which would require additional evaluation or mitigation. Contaminants were detected in soil vapor samples at concentrations exceeding NYSDOH Indoor Air Median Concentrations were identified for several VOCs. A complete summary of analytical results for AOC-7 to date are presented in Tables 7A through 7D.

3.3.8 ADDITIONAL LOCATIONS OUTSIDE AOC'S

Soil Quality

Metals and SVOCs were detected at concentrations exceeding RRSCOs in surface soil samples. No VOCs, SVOCs, pesticides, herbicides or PCBs were detected in subsurface soil at concentrations exceeding RRSCOs

- Surface Soil: Metals and SVOCs were detected at concentrations exceeding RRSCOs.
- Subsurface Soil: Only one metal (arsenic) was detected at concentrations exceeding RRSCOs.

Groundwater Quality

No VOCs, SVOCs, metals, pesticides, herbicides or PCBs were detected at concentrations exceeding Class GA groundwater standards.

Vapor Quality

No VOCs were detected at concentrations exceeding the applicable NYSDOH Matrix Values which would require additional evaluation or mitigation. Contaminants were detected in soil vapor samples at concentrations exceeding NYSDOH Indoor Air Median Concentrations.

A complete summary of analytical results from samples collected outside the AOC's is presented in Tables 8A-8D and 9A-9D.

4 QUALITATIVE EXPOSURE ASSESSMENTS

Regulation DER-10 Section 3.3(c)4 "Qualitative Exposure Assessments" requires that a qualitative exposure assessment for both human health and/or fish and wildlife resources be completed during the Remedial Investigation "to qualitatively determine the route, intensity, frequency and duration of actual or potential exposures to contaminants."

This assessment should:

- Describe the nature and size of the population currently exposed or which may reasonably be expected to be exposed to the contaminants that are present at or migrating from the site.
- Include a determination of the reasonably anticipated future land use of the site and affected off-site areas.
- Identify the reasonably anticipated future groundwater use.
- Characterize the exposure setting, identifying current and reasonably foreseeable exposure pathways.
- Evaluate contaminant fate and transport.
- Include a full delineation of the nature and extent of off-site impacts; unless the remedial party is a volunteer in the BCP, in which event off-site field information is only needed sufficient to identify the presence of contamination and support the qualitative off-site exposure assessment of these sites.

4.1 QUALITATIVE HUMAN HEALTH EXPOSURE ASSESSMENT

The objective of the qualitative human health exposure assessment (QHHEA) is to identify potential receptors and pathways for human exposure to the contaminants of concern (COC) that are present at the Site. Potential receptors are the populations that may become exposed to COCs by virtue of their presence at the Site. Receptors vary by age, the nature of their use of the Site, and hours of occupancy. A key element of the QHHEA is the identification of exposure pathways. An exposure pathway describes a potential route that the COC may take to travel from the source to the receptor. Generally, multiple exposure pathways are identified for a Site. An identified pathway indicates that the potential for exposure through that route exists; it does not signify that the exposure actually occurs.

A QHHEA was conducted in accordance with Appendix 3B and Section 3.3 (b) 8 of the NYSDEC Draft DER-10 Technical Guidance for Site Investigation and Remediation to

determine whether the Site poses an existing or future health hazard to the Site's exposed or potentially exposed populations (i.e., the receptors). This assessment included:

- A description of the contaminant source(s), including the location of the contaminant release to the environment (any waste disposal area or point of discharge), or if the original source is unknown, the contaminated environmental medium (soil, indoor or outdoor air, water, etc.) at the point of exposure;
- An explanation of the contaminant release and transport mechanisms to the exposed population;
- Identification of all potential exposure point(s) where actual or potential human contact with a contaminated medium may occur;
- Description(s) of the route(s) of exposure (i.e., ingestion, inhalation, dermal absorption); and
- A characterization of the receptor populations who may be exposed to contaminants at a point of exposure.

4.1.1 SITE CONDITIONS

The Site has been vacant for more than ten years. It was most recently operated as a psychiatric hospital, and many structures associated with the former hospital remain on the property. The Site is primarily grass- and tree-covered, with interspersed asphalt-paved roadways and concrete sidewalks. The anticipated future site development is a combination of multi-family residential and commercial uses.

4.1.2 CONCEPTUAL SITE MODEL

A conceptual site model has been developed based on the findings of the RI. The purpose of the model is to develop a simplified framework for understanding the sources of contamination, potential migration pathways and potentially complete exposure pathways. Following is a description of each.

4.1.2.1 SOURCES OF CONTAMINATION

SOIL: As discussed previously, only SVOCs and metals were detected at concentrations exceeding RRSCOs in soil, largely in the upper 2 feet underlying the existing vegetation. AOCs 3 and 6 are not included in the discussion below, since contaminants were not detected at concentrations exceeding RRSCOs.

AOC -1 – Power House: Contaminant concentrations exceeding RRSCOs were detected in 44 of 94 soil samples collected at AOC-1 (30 samples between 0-2 feet below grade; 14 samples greater than 2 feet below grade) from 33 soil borings. SVOCs and metals were the only parameters that exceeded the RRSCOs in AOC-1. All of the SVOCs detected at concentrations

exceeding RRSCOs were PAHs. See figures 13, 14, and 15 for details. Grossly contaminated media (soil and separate phase liquids) are present in subsurface soil.

AOC-2 – Auto Garage: Contaminant concentrations exceeding RRSCOs were detected in 4 of 46 soil samples at AOC-2 (3 samples between 0-2 feet below grade; 1 sample greater than 2 feet below grade) collected from 14 soil borings. Metals were the only parameter that exceeded the RRSCOs in AOC-2.

AOC-4 – Fire Station: Contaminant concentrations exceeding RRSCOs were detected in 4 of 11 soil samples collected at AOC-4 (each between 0-2 feet below grade) from 4 soil borings. SVOCs and metals were the only parameters that exceeded the RRSCOs in AOC-4.

AOC-5 – Building 49 – Former Gasoline Refueling: Contaminant concentrations exceeding RRSCOs were detected in 1 of 10 soil samples collected at AOC-5 (between 0-2 feet below grade) from 4 soil borings. Arsenic was detected in 1 sample (between 0-2 feet below grade) exceeding the RRSCO.

AOC-7 – Maintenance Building: Contaminant concentrations exceeding RRSCOs were detected in 1 of 6 soil samples collected at AOC-7 (between 0-2 feet below grade) from 4 soil borings. Arsenic was detected in 1 sample (between 0-2 feet below grade) exceeding the RRSCO.

Temporary Monitoring Well Installations: Contaminant concentrations exceeding RRSCOs were detected in 1 of 6 soil samples (greater than 2 feet below grade) collected from the temporary monitoring well locations, which consisted of 5 soil borings. Arsenic was detected in 1 sample (greater than 2 feet below grade) exceeding the RRSCO.

Outside AOCs: Contaminant concentrations exceeding RRSCOs were detected in 8 of 54 soil samples collected in areas outside the AOCs (each between 0-2 feet below grade) from 28 soil samples. SVOCs and metals were the only parameters that exceeded the RRSCOs in the areas outside the AOCs.

GROUNDWATER: <u>Only pesticides and metals were detected in groundwater samples at concentrations exceeding Class GA standards.</u> Contaminant concentrations exceeding Class GA standards were detected in 13 of 29 groundwater samples collected from 15 site-wide groundwater monitoring wells.

VAPOR: None of the vapor samples contained concentrations of contaminants in excess of the action levels in Section 3.4.2 Decision Matrices for carbon tetrachloride, tetrachloroethene, 1,1,1-trichloroethane and trichloroethene. However, contaminants were detected at

concentrations exceeding NYSDOH Indoor Air 99th Percentile concentrations in 15 of 25 vapor samples collected from 20 site-wide locations.

SUMMARY: SVOCs and metals are present in surface soil at shallow depths. Metals may be non-uniform in lateral distribution, but are typically present in greater concentrations in shallow soil (0-2 feet bgs). Petroleum-related SVOCs were detected in subsurface soil at AOC-1, but target compounds were not detected at concentrations exceeding applicable standards.

4.1.2.2 Receptor Populations

The human receptors for current Site conditions include workers, visitors, and trespassers. Trespassers may be comprised of children, adolescents and adults, whereas construction workers and most visitors would be limited to adults. During construction and remediation activities, receptors will likely include adult workers and visitors.

4.1.2.3 Potential Exposure Pathways

Potential pathways to human receptors include the following:

- Ingestion of fill/soil;
- Inhalation of vapors and particulates; and
- Dermal contact with fill/soil or building materials.

Current Conditions: Currently, the site is vacant with unoccupied structures and there is limited potential for exposure to site related contaminants. A potential exposure pathway to contaminants in surface soil does exist where soil is exposed, however most areas are covered with vegetation. No potential pathway to contaminants in groundwater exists since groundwater is not accessible at the Site, and because the Site is served by a public water supply. A pathway from COCs in soil gas to human receptors does not exist for current Site conditions since none of the buildings on site are occupied.

Construction/Remediation Activities: Once demolition and site remediation activities begin, workers will come into direct contact with surface and subsurface soils, as a result of investigations, demolition and excavation activities. On-Site workers potentially could ingest, inhale or have dermal contact with exposed impacted soil, fill, and potentially groundwater. Off-site receptors could be exposed to dust from on-site activities, but the likelihood is low considering the distance from construction/investigation activities to off-site receptors. During investigation, demolition and construction, on- site and off-site exposures to contaminated dust

will be addressed through the Soil/Materials Management Plan, dust controls, and through the implementation of a Community Air Monitoring Program and a Health and Safety Plan.

Future (Post-Construction) Conditions: Once the remedial actions and redevelopment of the Site have been completed, the site will be covered with clean fill over contaminated areas, buildings, parking lots, roads and sidewalks. These structures will prevent direct human exposure to any contaminated materials that may be left in place. Areas that exceed applicable standards will be capped with concrete and asphalt parking, sidewalks or soil cover, which will prevent contact with any residual soils. Implementation of a Site Management Plan will prevent exposure to residual soil in the future. After the buildings are constructed, a complete exposure pathway via inhalation of subsurface soil gas should not exist as long as the building slabs are sealed. However, vapor intrusion to indoor air presents a low, but potential, exposure pathway that will be addressed by future vapor mitigation techniques, if necessary.

Potential Exposure Pathways-Off site*:* Based on the findings of this RI, and the distribution of contaminants a potential for off-site human receptors does not exist.

4.1.3 OVERALL HUMAN HEALTH EXPOSURE ASSESSMENT

According to DER-10 Appendix 3B, the five elements of an exposure pathway include: (1) a contaminant source; (2) contaminant release and transport mechanisms; (3) a point of exposure; (4) a route of exposure; and (5) a receptor population. An exposure pathway is considered complete when all five elements of an exposure pathway are documented. A potential exposure pathway exists when any one or more of the five elements comprising an exposure pathway cannot be documented. An exposure pathway may be eliminated from further evaluation when any one of the five elements comprising an exposure pathway has not existed in the past, does not exist in the present, and cannot reasonably be anticipated to exist in the future.

4.1.3.1 Current Conditions

The conceptual site model identified a contaminant source and a human receptor population. Also, a point of exposure exists/may exist for potential exposure media for COCs in soil for current site conditions, since COCs are present in surface soil. However a contaminant release and transport mechanism does not exist, as contaminants in surface soil are not readily mobilized without disrupting the upper vegetative horizon. A receptor population consists only of trespassers, which cannot be fully documented. Therefore a complete exposure pathway does not exist.

4.1.3.2 Construction/Remediation Activities

Contaminant sources have been identified in areas of future remedial action. Points of exposure during construction/remediation activities include the disturbed and exposed contaminated soil during excavation, and contaminated dust and organic vapors arising from the excavation during remedial activities. Points of exposure will exist for groundwater COCs at AOC-1 because remedial action is likely to encounter groundwater; no other points of exposure would exist during construction/remediation.

Routes of exposure include ingestion and dermal absorption of contaminated soil or groundwater, inhalation of organic vapors arising from contaminated soil and groundwater, and inhalation of dust arising from contaminated soil. The receptor population includes the construction and remediation workers. All five elements exist; therefore, a completed exposure pathway is present. However, the temporary risk will be eliminated by applying appropriate health and safety measures, including monitoring the air for organic vapors and dust during implementation of the CAMP, using vapor and dust suppression measures, maintaining site security, and wearing the appropriate personal protective equipment. The exposure pathway is not complete for off-site populations. The only potential route of exposure would be through migration of dust. This potential exposure will be mitigated through the use of dust suppression, and confirmed by implementation of the CAMP.

4.1.3.3 Future (Post-Construction) Conditions

Post-construction conditions may have a contaminant source (Element 1) and a human receptor population (Element 5), however, a point of exposure (Element 3) will not exist for potential exposure to COCs in soil and groundwater. After the new buildings are constructed as part of site redevelopment, a complete exposure pathway via potential inhalation of subsurface vapors should not exist as long as the existing building slab is sealed and vapor mitigation techniques are employed in building construction where necessary.

4.1.3.4 Potential Ecological Risks

The site is a former psychiatric hospital with buildings, paved and gravel roads, sidewalks and asphalt parking areas. The proposed future site use is mixed residential and commercial use, with the majority of the site covered by buildings, concrete sidewalks and asphalt, providing little or no wildlife habitat or food value. As such, no unacceptable ecological risks are anticipated under the current or reasonably anticipated future use scenario. The need for a Fish and Wildlife Impact Analysis is addressed in Section 4.2, below.

4.1.4 QHHEA Summary

Based upon the above analysis, there is a potential complete exposure pathway that requires mitigation during implementation of the remedy. There is no complete exposure pathway under future conditions after the Site is developed. This assessment takes into consideration the reasonably anticipated use of the Site, which includes a mixed use commercial and residential development, and surface cover cap over contaminated areas. Potential post-construction use of groundwater is not considered an option because the area is served by public water, and institutional controls prohibiting the use of groundwater will be placed on the property as part of the environmental easement.

During the remedial action, on-site exposure pathways will be eliminated by preventing access to the Site, through implementation of soil/materials management, stormwater pollution prevention, dust controls, employment of a community air monitoring plan, and implementation of a Health and Safety Plan. After the remedial action is complete, there will be no remaining exposure pathways to on-Site soil/ fill, due to the capping of remaining impacted soil. The exposure route and assessment table included in Appendix 3B of DER-10 is presented below.

Environmental Media & Exposure Route	Human Exposure Assessment
Direct contact with surface soils (and incidental ingestion)	No exposure because contaminated surface soils are covered with pavement, vegetation, and gravel. No exposure because legal public access is restricted by fencing and Site security. Potential exposure to trespassers on the Site if they intentionally or inadvertently excavate in areas of contaminated soil.
Direct contact with subsurface soils (and incidental ingestion)	Potential exposure for workers completing intrusive remedial actions at the Site.
Ingestion of groundwater	No exposure because the Site is served by a public water supply and groundwater is not being used for drinking water. There are no known domestic water supply wells in the immediate area. The public water supply uses groundwater in the area as its source; however, the water is treated and tested by the Dutchess County Water and Wastewater Authority on a routine basis to verify that it meets drinking water standards prior to distribution to area consumers. Potential exposure if private wells are installed on the property.
Direct contact with groundwater	Potential exposure for workers completing intrusive remedial actions at the Site, particularly at AOC-1.
Inhalation of air (exposures related to soil vapor intrusion)	A soil vapor intrusion evaluation will be completed should buildings be constructed in areas where VOCs were detected during the Remedial Investigation. Ventilation systems will be installed in on-site buildings to prevent the indoor air quality from being affected by the contamination, if identified.

4.2 FISH AND WILDLIFE RESOURCE IMPACT ANALYSIS (FWRIA)

Based on site conditions and current data, no FWRIA is required.

Previous studies for the Site did not identify any habitats of endangered, threatened or special concern species on-site. No such features were observed during completion of this RI. Although a petroleum spill occurred previously at the site, impacts have not migrated off-site, as demonstrated by groundwater quality samples.

Based on these observations and the results presented in this RI, the contaminants detected at the Site do not have the potential to migrate, erode, or otherwise impact any on-site or off-site habitats of endangered, threatened or special-concern species or other fish or wildlife resource. The Fish and Wildlife Resources Impact Analysis matrix below (Appendix 3C of DER-10) was followed to assist in this determination.

Appendix 3C **Fish and Wildlife Resources Impact Analysis Decision Key**	If YES Go to:	If NO Go to:
1. Is the site or area of concern a discharge or spill event?	13	2
2. Is the site or area of concern a point source of contamination to the groundwater which will be prevented from discharging to surface water? Soil contamination is not widespread, or if widespread, is confined under buildings and paved areas.	13	3
3. Is the site and all adjacent property a developed area with buildings, paved surfaces and little or no vegetation?	4	9
4. Does the site contain habitat of an endangered, threatened or special concern species?	Section 3.10.1	5
5. Has the contamination gone off-site?	6	14
6. Is there any discharge or erosion of contamination to surface water or the potential for discharge or erosion of contamination?	7	14
7. Are the site contaminants PCBs, pesticides or other persistent, bioaccumulable substances?	Section 3.10.1	8
8. Does contamination exist at concentrations that could exceed ecological impact SCGs or be toxic to aquatic life if discharged to surface water?	Section 3.10.1	14
9. Does the site or any adjacent or downgradient property contain any of the following resources? i. Any endangered, threatened or special concern species or rare plants or their habitat ii. Any DEC designated significant habitats or rare NYS Ecological Communities iii. Tidal or freshwater wetlands iv. Stream, creek or river v. Pond, lake, lagoon vi. Drainage ditch or channel vii. Other surface water feature viii. Other marine or freshwater habitat ix. Forest x. Grassland or grassy field xi. Parkland or woodland xii. Shrubby area xiii. Urban wildlife habitat xiv. Other terrestrial habitat	11	10
10. Is the lack of resources due to the contamination?	3.10.1	14
11. Is the contamination a localized source which has not migrated and will not migrate from the source to impact any on-site or off-site resources?	14	12
12. Does the site have widespread surface soil contamination that is not confined under and around buildings or paved areas?	Section 3.10.1	12
13. Does the contamination at the site or area of concern have the potential to migrate to, erode into or otherwise impact any on-site or off-site habitat of endangered, threatened or special concern species or other fish and wildlife resource? (See #9 for list of potential resources. Contact DEC for information regarding endangered species.)	Section 3.10.1	14
14. No Fish and Wildlife Resources Impact Analysis needed.		

5.0 SUMMARY and CONCLUSIONS

This section summarizes the results of the HRPC – North Area RI with respect to the primary goals of the investigation;

- Characterize the lateral and vertical extent of contamination in the HRPC North Area to the degree necessary to evaluate the human health and ecological risks and to develop a remedy to reduce these risks.
- Document the sources of contamination in the HRPC North Area, including a preliminary evaluation of ongoing sources of contamination that need to be addressed so that a sustainable remedy can be developed and implemented.
- Determine the human health and ecological risks from exposure to contamination.

The nature and extent of contamination at the HRPC – North Area BCP has been established to the degree necessary to complete the required risk assessments and remedial alternatives analysis. These program-required elements will be presented to the Department in the Remedial Action Work Plan, to be prepared. The horizontal and vertical distribution of contamination was characterized by field observations and the analysis of soil, vapor and groundwater samples, as follows:

5.1 Surface Soil

Surface soil (0 to 24”) is contaminated with heavy metals and SVOCs (PAHs) related to the coal storage, handling, and processing areas (AOC-1). Some surface soil around the Auto Garage (AOC-2) may also have been impacted by site operations. Several isolated areas also contain SVOCs and metals at concentrations exceeding RRSCOs. Figure 16 depicts the approximate extent of surface soil which exceeds soil cleanup objectives. Other AOCs (Firehouse, Car Wash) do not appear to have adversely impacted the site.

5.2 Subsurface Soil

Site related contaminants were detected at concentrations exceeding SCOs in subsurface soils only in the Power House AOC where a known petroleum release occurred. Grossly contaminated media at the Power House (contaminated soil and free product) are being addressed according to a proposed IRM Work Plan. Other exceedances of site related contaminants in subsurface soils are restricted to places where contaminants may have been pushed into the subsurface by drilling activities during this RI (Auto Garage AOC-2).

5.3 Soil Vapor

None of the vapor samples contained concentrations of contaminants in excess of the action levels in Section 3.4.2 Decision Matrices for carbon tetrachloride, tetrachloroethene, 1,1,1-

trichloroethane and trichloroethene. However, contaminants were detected at concentrations exceeding NYSDOH Indoor Air 99th Percentile concentrations in 15 of 25 vapor samples collected from 20 site-wide locations.

5.4 Groundwater

Only limited impacts to groundwater were observed during the RI. Only pesticides and metals were detected in groundwater samples at concentrations exceeding Class GA standards.

5.5 Conclusions

1. Ongoing sources of contamination are present in surface soils (0-2') in the vicinity of the Power House and former coal storage areas (AOC-1), and the vicinity of the Auto Garage (AOC-2). Human exposure to these contaminants is possible, and a remedy should be implemented to prevent this exposure. Impacts to ecological resources from contaminants in surface soils is unlikely, considering the lack of resources in the area, and current site cover.

2. Ongoing sources of contamination are present in subsurface soils in the vicinity of the Power House former fuel storage tanks. Human exposure to these contaminants, or impacts to ecological resources are unlikely, however the presence of grossly contaminated media and free product necessitates remedial action.

3. Human exposure to contaminants in groundwater is unlikely, considering the limited impacts to groundwater, and because groundwater is not (and will not be) relied on for consumptive purposes.
4. Contaminated vapors may be present in the subsurface which are not currently a risk to human health, since the site is abandoned. The potential exposure hazard can be addressed through additional vapor intrusion evaluations at the time of site redevelopment, or in future construction through the installation of appropriate vapor mitigation systems.

5. Based on the information presented in this RI, we recommend preparation of a Remedial Action Work Plan which presents an evaluation of remedial alternatives.

6 CERTIFICATION

"I, Timothy Pagano, certify that I am currently a Qualified Environmental Professional as defined in 6 NYCRR Part 375 and *that this Remedial Investigation Report was prepared in accordance with all applicable statutes and regulations and in substantial conformance with the DER Technical Guidance for Site Investigation and Remediation (DER-10) and that all activities were performed in full accordance with the DER-approved work plan and any DER-approved modifications*."

Timothy S Pagano	12/28/2015
Signature	**Date**

FIGURES

Figure 1 – Site Location Figure

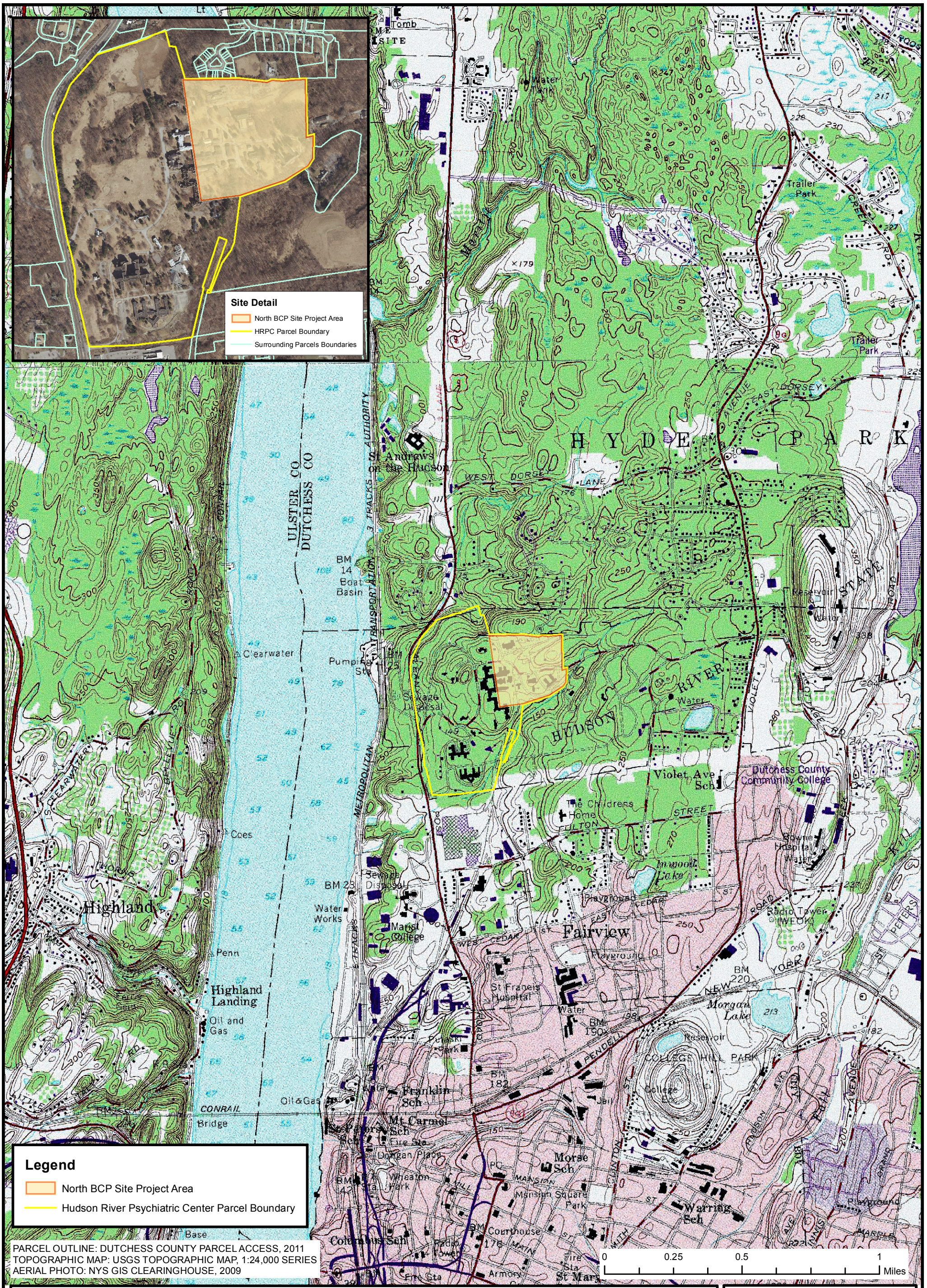

SITE LOCATION FIGURE

HUDSON RIVER PSYCHIATRIC CENTER
TOWN OF POUGHKEEPSIE
DUTCHESS COUNTY, NEW YORK

FIGURE 1

DATE:	1/20/2015
SCALE:	As Indicated
PROJECT NUMBER:	560909

ALL LOCATIONS APPROXIMATE

PVE Sheffler

48 Springside Avenue
Poughkeepsie, New York 12603
Phone: (845) 454-2544
Fax: (845) 454-2655

Figure 2 – Selected Site Features

SELECTED SITE FEATURES

HUDSON RIVER PSYCHIATRIC CENTER - NORTH BCP SITE, REMEDIAL INVESTIGATION REPORT
TOWN OF POUGHKEEPSIE
DUTCHESS COUNTY, NEW YORK

PVE Sheffler

Aerial Image: NYSGIS Clearinghouse
Dutchess County 2013

48 Springside Avenue
Poughkeepsie, New York 12603
Phone: (845) 454-2544
Fax: (845) 454-2655

FIGURE 2

DATE:	1/20/2015
SCALE:	As Indicated
PROJECT NUMBER:	560909

ALL LOCATIONS APPROXIMATE

Legend

BCP Boundary

Figure 3A – Sampling Locations – Site Wide North

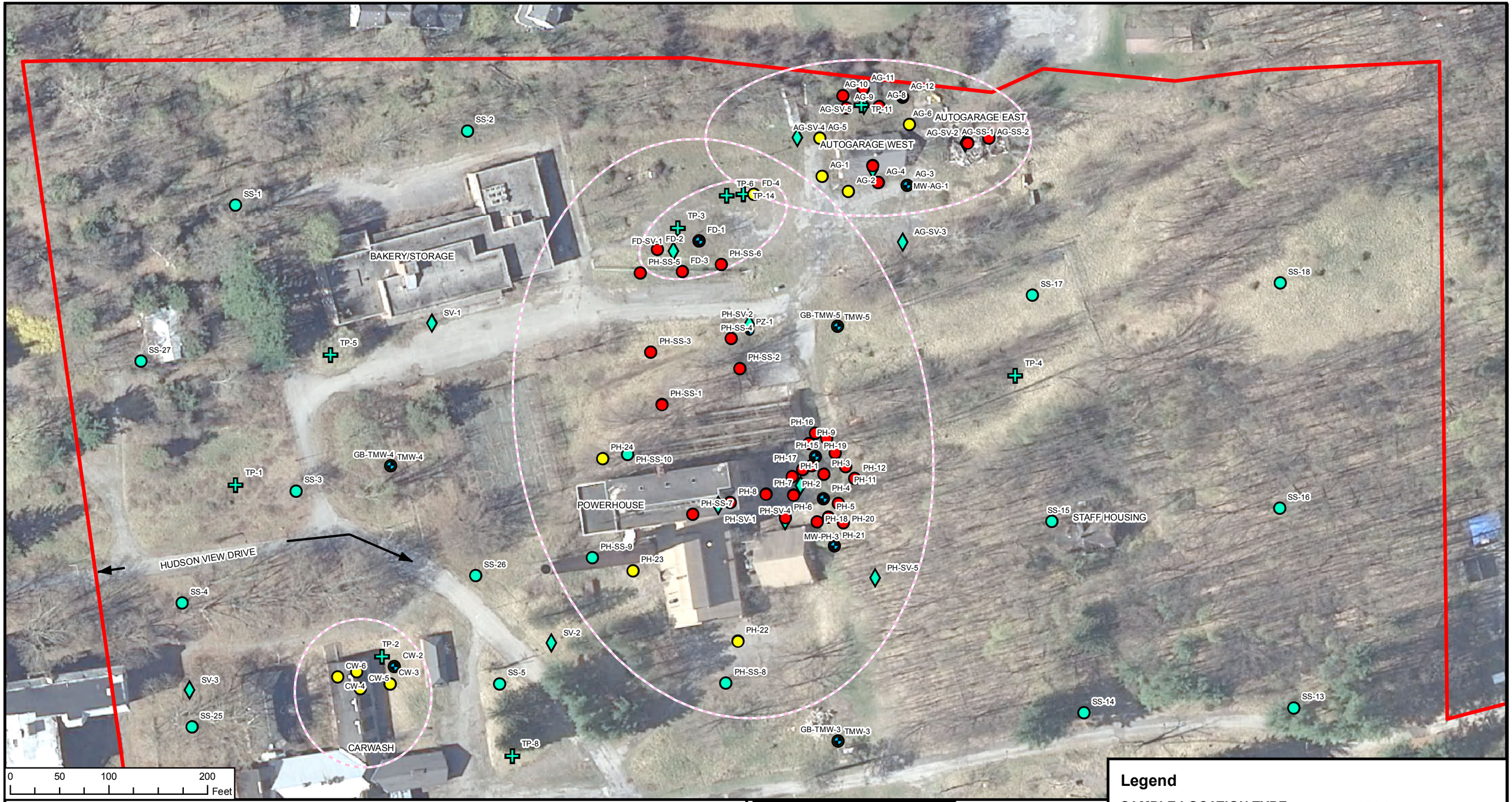

SAMPLING LOCATIONS

HUDSON RIVER PSYCHIATRIC CENTER - NORTH BCP SITE, REMEDIAL INVESTIGATION REPORT
TOWN OF POUGHKEEPSIE
DUTCHESS COUNTY, NEW YORK

PVE Sheffler

Aerial Image: NYSGIS Clearinghouse
Dutchess County 2013

48 Springside Avenue
Poughkeepsie, New York 12603
Phone: (845) 454-2544
Fax: (845) 454-2655

FIGURE 3A

DATE:	1/20/2015
SCALE:	As Indicated
PROJECT NUMBER:	560909

ALL LOCATIONS APPROXIMATE

Legend

SAMPLE LOCATION TYPE

- Groundwater Well
- Soil Vapor
- Subsurface Soil
- Surface Soil
- Surface and Subsurface Soil
- Test Pit

- BCP Boundary
- Area of Concern Boundary

Figure 3B – Sampling Locations – Site Wide South

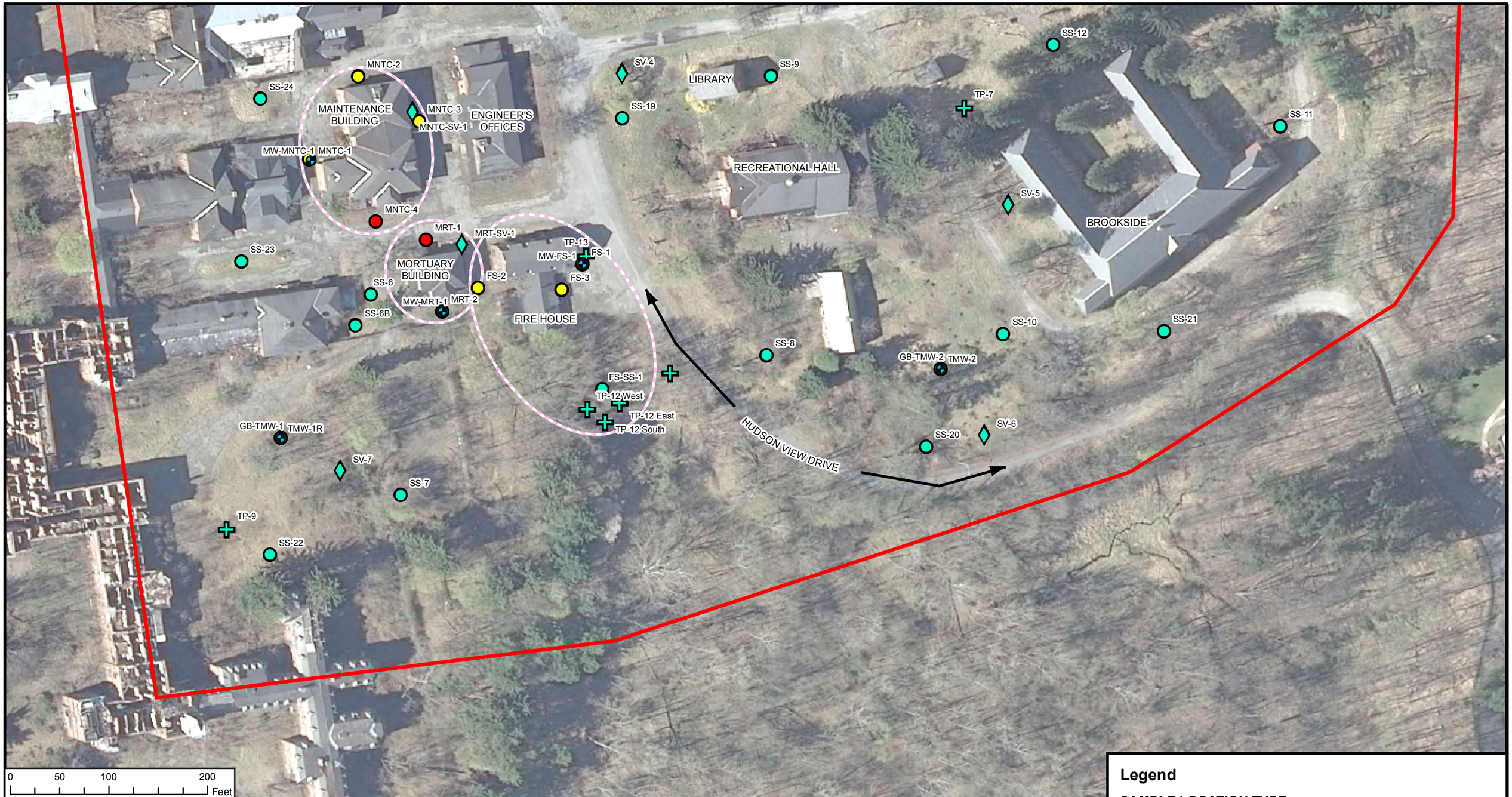

SAMPLING LOCATIONS

HUDSON RIVER PSYCHIATRIC CENTER - NORTH BCP SITE, REMEDIAL INVESTIGATION REPORT
TOWN OF POUGHKEEPSIE
DUTCHESS COUNTY, NEW YORK

PVE Sheffler

Aerial Image: NYSGIS Clearinghouse
Dutchess County 2013

48 Springside Avenue
Poughkeepsie, New York 12603
Phone: (845) 454-2544
Fax: (845) 454-2655

FIGURE 3B

DATE:	1/20/2015
SCALE:	As Indicated
PROJECT NUMBER:	560909

ALL LOCATIONS APPROXIMATE

Legend

SAMPLE LOCATION TYPE

- Groundwater Well
- Soil Vapor
- Subsurface Soil
- Surface Soil
- Surface and Subsurface Soil
- Test Pit

- BCP Boundary
- Area of Concern Boundary

Figure 4 – Surface Soil Sampling Locations

SURFACE SOIL SAMPLING LOCATIONS

HUDSON RIVER PSYCHIATRIC CENTER - NORTH BCP SITE, REMEDIAL INVESTIGATION REPORT
TOWN OF POUGHKEEPSIE
DUTCHESS COUNTY, NEW YORK

FIGURE 4

DATE:	1/20/2015
SCALE:	As Indicated
PROJECT NUMBER:	560909

ALL LOCATIONS APPROXIMATE

Legend

SAMPLE LOCATION TYPE
- Surface Soil
- Surface and Subsurface Soil

- BCP Boundary
- Area of Concern Boundary

PVE Sheffler

48 Springside Avenue
Poughkeepsie, New York 12603
Phone: (845) 454-2544
Fax: (845) 454-2655

Aerial Image: NYSGIS Clearinghouse
Dutchess County 2013

Figure 5 – Soil Boring Locations

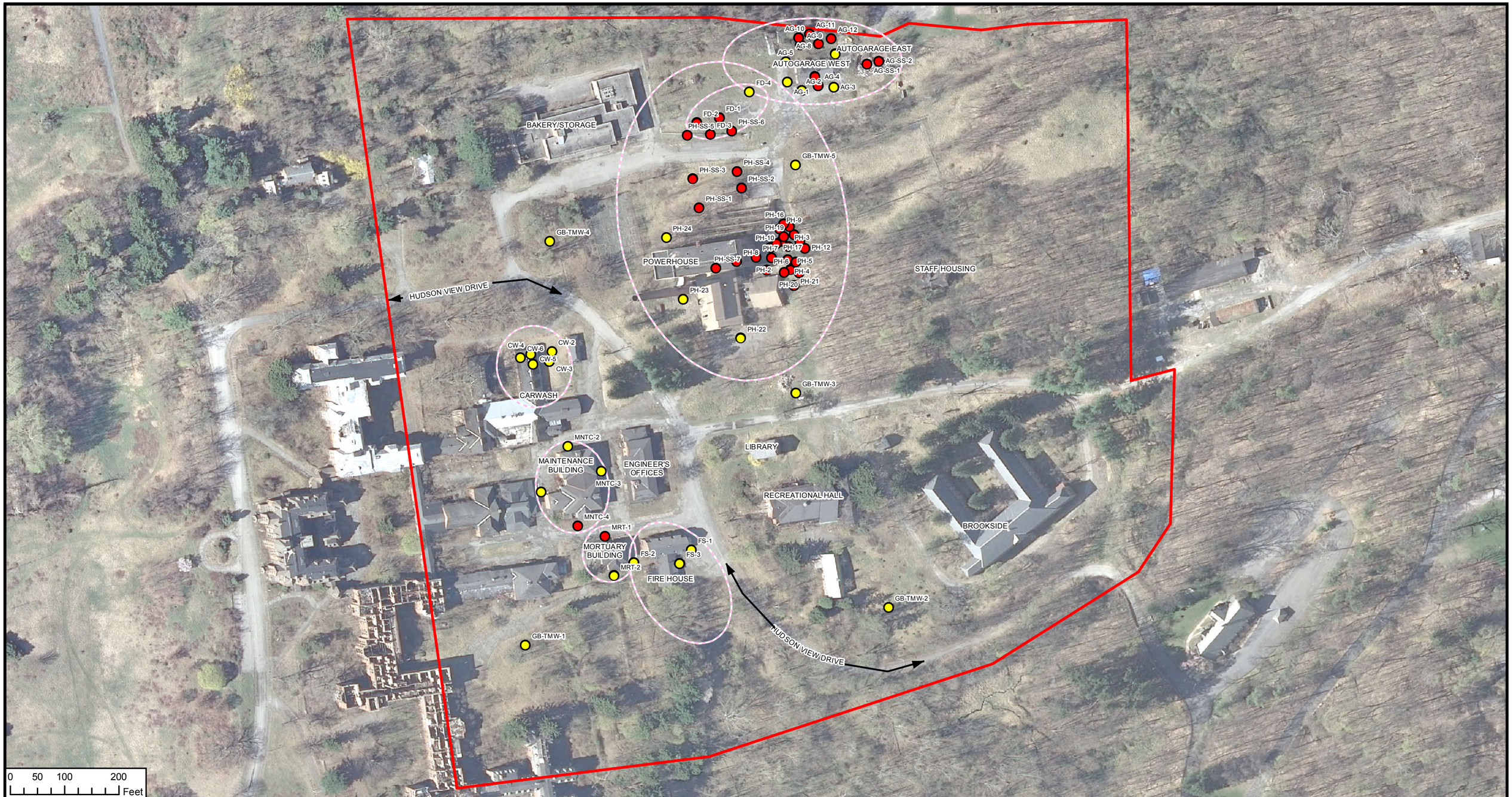

SOIL BORING SAMPLING LOCATIONS

HUDSON RIVER PSYCHIATRIC CENTER - NORTH BCP SITE, REMEDIAL INVESTIGATION REPORT
TOWN OF POUGHKEEPSIE
DUTCHESS COUNTY, NEW YORK

PVE Sheffler

Aerial Image: NYSGIS Clearinghouse
Dutchess County 2013

48 Springside Avenue
Poughkeepsie, New York 12603
Phone: (845) 454-2544
Fax: (845) 454-2655

FIGURE 5

DATE:	1/20/2015
SCALE:	As Indicated
PROJECT NUMBER:	560909

ALL LOCATIONS APPROXIMATE

Legend

SAMPLE LOCATION TYPE
- Subsurface Soil
- Surface and Subsurface Soil

- BCP Boundary
- Area of Concern Boundary

Figure 6 – Groundwater Monitoring Well Locations

MONITORING WELL LOCATIONS

HUDSON RIVER PSYCHIATRIC CENTER - NORTH BCP SITE, REMEDIAL INVESTIGATION REPORT
TOWN OF POUGHKEEPSIE
DUTCHESS COUNTY, NEW YORK

FIGURE 6

DATE:	1/20/2015
SCALE:	As Indicated
PROJECT NUMBER:	560909

ALL LOCATIONS APPROXIMATE

Legend

SAMPLE LOCATION TYPE
- Groundwater Well

- BCP Boundary
- Area of Concern Boundary

PVE Sheffler

Aerial Image: NYSGIS Clearinghouse
Dutchess County 2013

48 Springside Avenue
Poughkeepsie, New York 12603
Phone: (845) 454-2544
Fax: (845) 454-2655

Figure 7 – Soil Vapor Sampling Locations

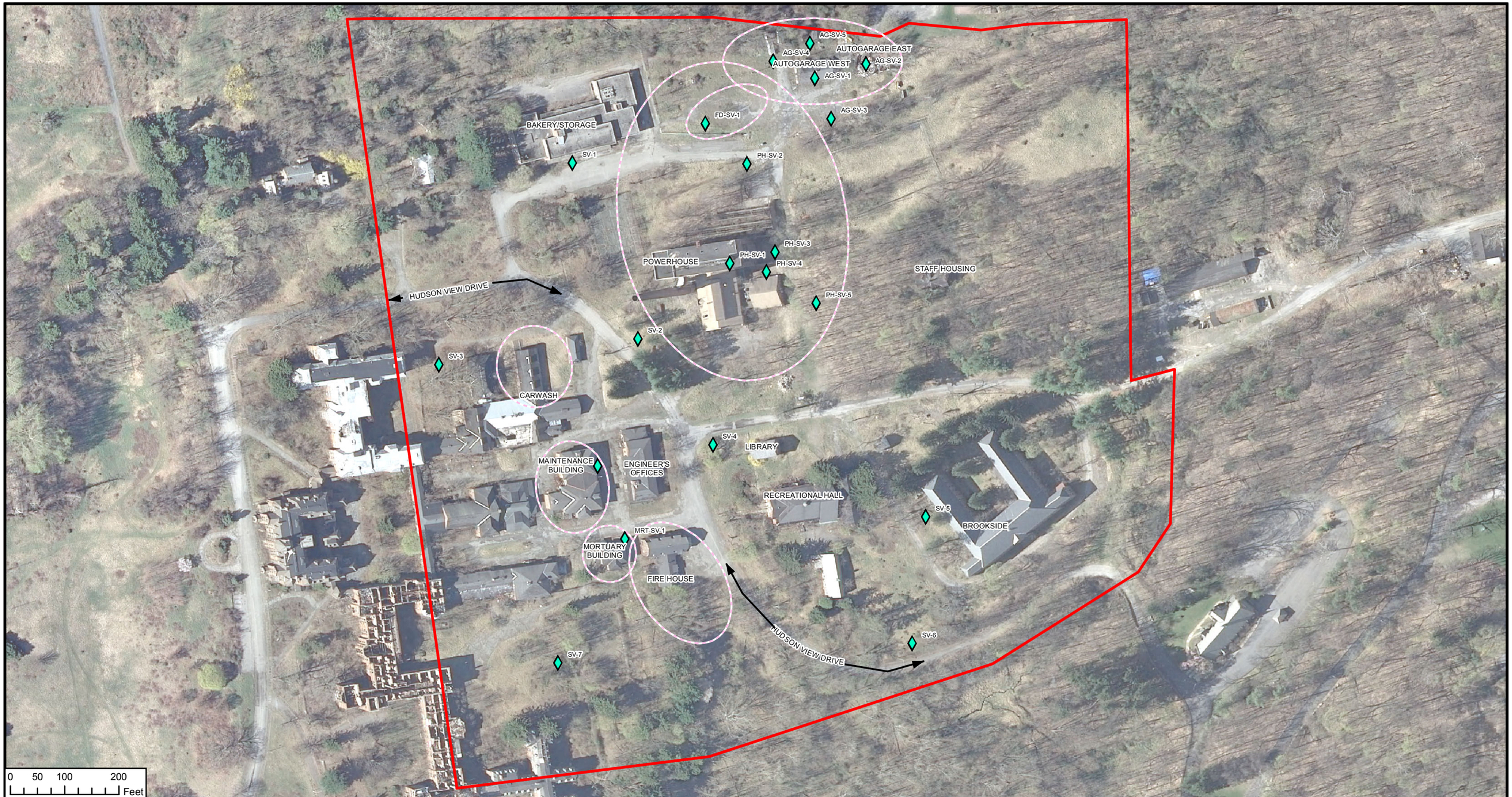

SOIL VAPOR SAMPLING LOCATIONS

HUDSON RIVER PSYCHIATRIC CENTER - NORTH BCP SITE, REMEDIAL INVESTIGATION REPORT
TOWN OF POUGHKEEPSIE
DUTCHESS COUNTY, NEW YORK

FIGURE 7

DATE:	1/20/2015
SCALE:	As Indicated
PROJECT NUMBER:	560909

ALL LOCATIONS APPROXIMATE

Legend

SAMPLE LOCATION TYPE
- Soil Vapor
- BCP Boundary
- Area of Concern Boundary

PVE Sheffler

Aerial Image: NYSGIS Clearinghouse
Dutchess County 2013

48 Springside Avenue
Poughkeepsie, New York 12603
Phone: (845) 454-2544
Fax: (845) 454-2655

Figure 8 – Groundwater Contour Map

GROUNDWATER CONTOUR MAP

HUDSON RIVER PSYCHIATRIC CENTER - NORTH BCP SITE
REMEDIAL INVESTIGATION REPORT
TOWN OF POUGHKEEPSIE, DUTCHESS COUNTY, NEW YORK

FIGURE 8

DATE:	2/23/2015
SCALE:	As Indicated
PROJECT NUMBER:	500038

ALL LOCATIONS APPROXIMATE

PVE Sheffler

48 Springside Avenue
Poughkeepsie, New York 12603
Phone: (845) 454-2544
Fax: (845) 454-2655

Figure 9 – Surface Soil (0-2’) Exceedances of RRUSCOs

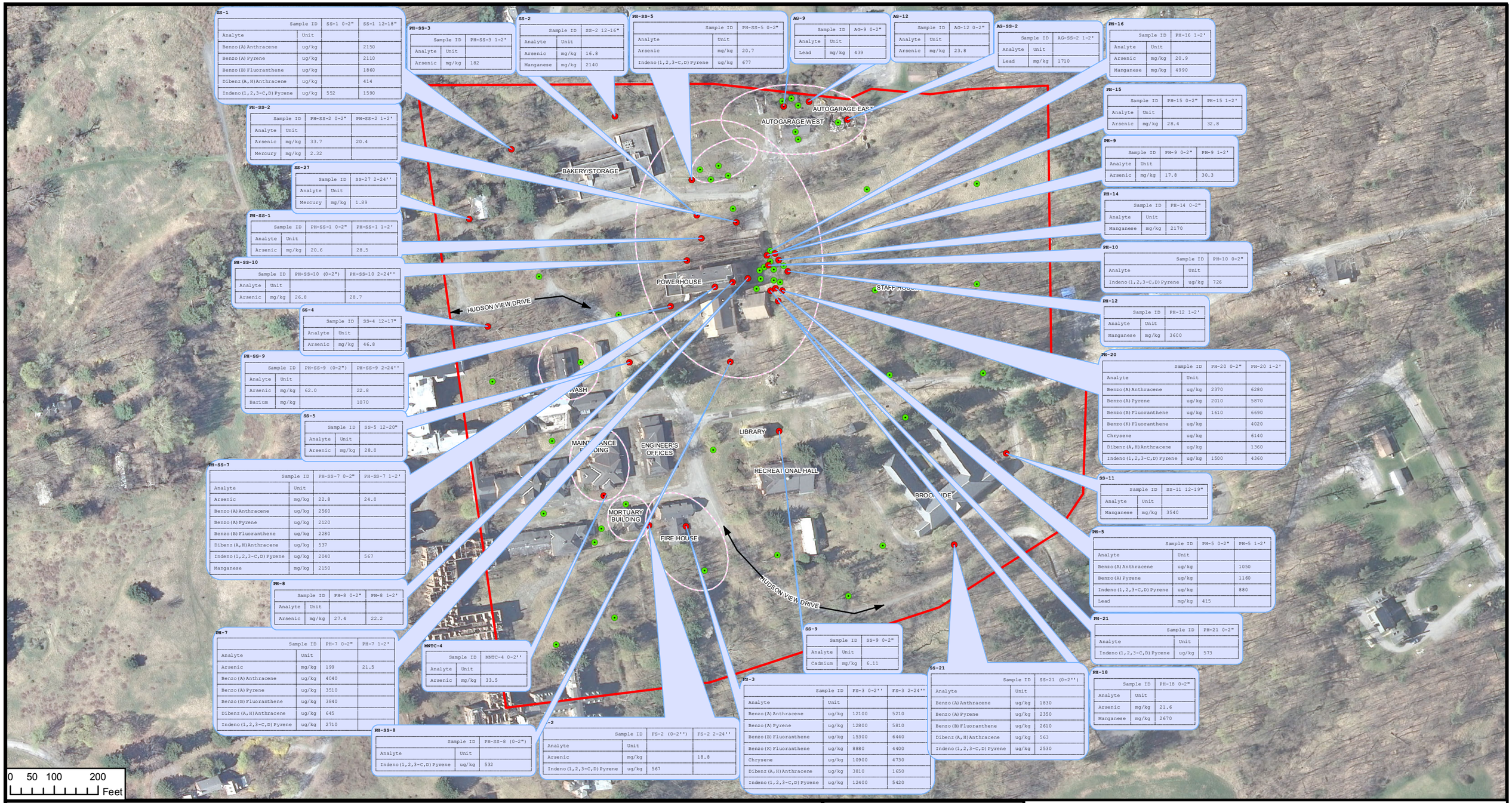

SS-1

Sample ID		SS-1 0-2"	SS-1 12-18"
Analyte	Unit		
Benzo(A)Anthracene	ug/kg		2150
Benzo(A)Pyrene	ug/kg		2110
Benzo(B)Fluoranthene	ug/kg		1860
Dibenz(A,H)Anthracene	ug/kg		414
Indeno(1,2,3-C,D)Pyrene	ug/kg	552	1590

PH-SS-3

Sample ID		PH-SS-3 1-2'
Analyte	Unit	
Arsenic	mg/kg	182

SS-2

Sample ID		SS-2 12-16"
Analyte	Unit	
Arsenic	mg/kg	16.8
Manganese	mg/kg	2140

PH-SS-5

Sample ID		PH-SS-5 0-2"
Analyte	Unit	
Arsenic	mg/kg	20.7
Indeno(1,2,3-C,D)Pyrene	ug/kg	677

AG-9

Sample ID		AG-9 0-2"
Analyte	Unit	
Lead	mg/kg	439

AG-12

Sample ID		AG-12 0-2"
Analyte	Unit	
Arsenic	mg/kg	23.8

AG-SS-2

Sample ID		AG-SS-2 1-2'
Analyte	Unit	
Lead	mg/kg	1710

PH-16

Sample ID		PH-16 1-2'
Analyte	Unit	
Arsenic	mg/kg	20.9
Manganese	mg/kg	4990

PH-SS-2

Sample ID		PH-SS-2 0-2"	PH-SS-2 1-2'
Analyte	Unit		
Arsenic	mg/kg	33.7	20.4
Mercury	mg/kg	2.32	

PH-15

Sample ID		PH-15 0-2"	PH-15 1-2'
Analyte	Unit		
Arsenic	mg/kg	28.4	32.8

SS-27

Sample ID		SS-27 2-24''
Analyte	Unit	
Mercury	mg/kg	1.89

PH-9

Sample ID		PH-9 0-2"	PH-9 1-2'
Analyte	Unit		
Arsenic	mg/kg	17.8	30.3

PH-SS-1

Sample ID		PH-SS-1 0-2"	PH-SS-1 1-2'
Analyte	Unit		
Arsenic	mg/kg	20.6	28.5

PH-14

Sample ID		PH-14 0-2"
Analyte	Unit	
Manganese	mg/kg	2170

PH-SS-10

Sample ID		PH-SS-10 (0-2")	PH-SS-10 2-24''
Analyte	Unit		
Arsenic	mg/kg	26.8	28.7

PH-10

Sample ID		PH-10 0-2"
Analyte	Unit	
Indeno(1,2,3-C,D)Pyrene	ug/kg	726

SS-4

Sample ID		SS-4 12-17"
Analyte	Unit	
Arsenic	mg/kg	46.8

PH-12

Sample ID		PH-12 1-2'
Analyte	Unit	
Manganese	mg/kg	3600

PH-SS-9

Sample ID		PH-SS-9 (0-2")	PH-SS-9 2-24''
Analyte	Unit		
Arsenic	mg/kg	62.0	22.8
Barium	mg/kg		1070

PH-20

Sample ID		PH-20 0-2"	PH-20 1-2'
Analyte	Unit		
Benzo(A)Anthracene	ug/kg	2370	6280
Benzo(A)Pyrene	ug/kg	2010	5870
Benzo(B)Fluoranthene	ug/kg	1610	6690
Benzo(K)Fluoranthene	ug/kg		4020
Chrysene	ug/kg		6140
Dibenz(A,H)Anthracene	ug/kg		1360
Indeno(1,2,3-C,D)Pyrene	ug/kg	1500	4360

SS-5

Sample ID		SS-5 12-20"
Analyte	Unit	
Arsenic	mg/kg	28.0

SS-11

Sample ID		SS-11 12-19"
Analyte	Unit	
Manganese	mg/kg	3540

PH-SS-7

Sample ID		PH-SS-7 0-2"	PH-SS-7 1-2'
Analyte	Unit		
Arsenic	mg/kg	22.8	24.0
Benzo(A)Anthracene	ug/kg	2560	
Benzo(A)Pyrene	ug/kg	2120	
Benzo(B)Fluoranthene	ug/kg	2280	
Dibenz(A,H)Anthracene	ug/kg	537	
Indeno(1,2,3-C,D)Pyrene	ug/kg	2040	567
Manganese	mg/kg	2150	

PH-5

Sample ID		PH-5 0-2"	PH-5 1-2'
Analyte	Unit		
Benzo(A)Anthracene	ug/kg		1050
Benzo(A)Pyrene	ug/kg		1160
Indeno(1,2,3-C,D)Pyrene	ug/kg		880
Lead	mg/kg	415	

PH-8

Sample ID		PH-8 0-2"	PH-8 1-2'
Analyte	Unit		
Arsenic	mg/kg	27.4	22.2

PH-21

Sample ID		PH-21 0-2"
Analyte	Unit	
Indeno(1,2,3-C,D)Pyrene	ug/kg	573

SS-9

Sample ID		SS-9 0-2"
Analyte	Unit	
Cadmium	mg/kg	6.11

PH-7

Sample ID		PH-7 0-2"	PH-7 1-2'
Analyte	Unit		
Arsenic	mg/kg	199	21.5
Benzo(A)Anthracene	ug/kg	4040	
Benzo(A)Pyrene	ug/kg	3510	
Benzo(B)Fluoranthene	ug/kg	3840	
Dibenz(A,H)Anthracene	ug/kg	645	
Indeno(1,2,3-C,D)Pyrene	ug/kg	2710	

MNTC-4

Sample ID		MNTC-4 0-2''
Analyte	Unit	
Arsenic	mg/kg	33.5

FS-3

Sample ID		FS-3 0-2''	FS-3 2-24''
Analyte	Unit		
Benzo(A)Anthracene	ug/kg	12100	5210
Benzo(A)Pyrene	ug/kg	12800	5810
Benzo(B)Fluoranthene	ug/kg	15300	6440
Benzo(K)Fluoranthene	ug/kg	8880	4400
Chrysene	ug/kg	10900	4730
Dibenz(A,H)Anthracene	ug/kg	3810	1650
Indeno(1,2,3-C,D)Pyrene	ug/kg	12400	5420

SS-21

Sample ID		SS-21 (0-2'')
Analyte	Unit	
Benzo(A)Anthracene	ug/kg	1830
Benzo(A)Pyrene	ug/kg	2350
Benzo(B)Fluoranthene	ug/kg	2610
Dibenz(A,H)Anthracene	ug/kg	563
Indeno(1,2,3-C,D)Pyrene	ug/kg	2530

PH-18

Sample ID		PH-18 0-2"
Analyte	Unit	
Arsenic	mg/kg	21.6
Manganese	mg/kg	2670

PH-SS-8

Sample ID		PH-SS-8 (0-2")
Analyte	Unit	
Indeno(1,2,3-C,D)Pyrene	ug/kg	532

FS-2

Sample ID		FS-2 (0-2'')	FS-2 2-24''
Analyte	Unit		
Arsenic	mg/kg		18.8
Indeno(1,2,3-C,D)Pyrene	ug/kg	567	

SURFACE SOIL SAMPLE LOCATIONS - ANALYTES IN SOIL AT CONCENTRATIONS EXCEEDING RRSCOS

HUDSON RIVER PSYCHIATRIC CENTER - NORTH BCP SITE, REMEDIAL INVESTIGATION REPORT
TOWN OF POUGHKEEPSIE, DUTCHESS COUNTY, NEW YORK

FIGURE 9

DATE:	1/29/2015
SCALE:	As Indicated
PROJECT NUMBER:	560909

ALL LOCATIONS APPROXIMATE

Legend

- Surface Soil: No Exceedence
- Surface Soil: Exceedence
- BCP Boundary
- Area of Concern Boundary

PVE Sheffler

48 Springside Avenue
Poughkeepsie, New York 12603
Phone: (845) 454-2544
Fax: (845) 454-2655

Aerial Image: NYSGIS Clearinghouse
Dutchess County 2013

Figure 10 – Subsurface Soil (>2’) Exceedances of RRUSCOs

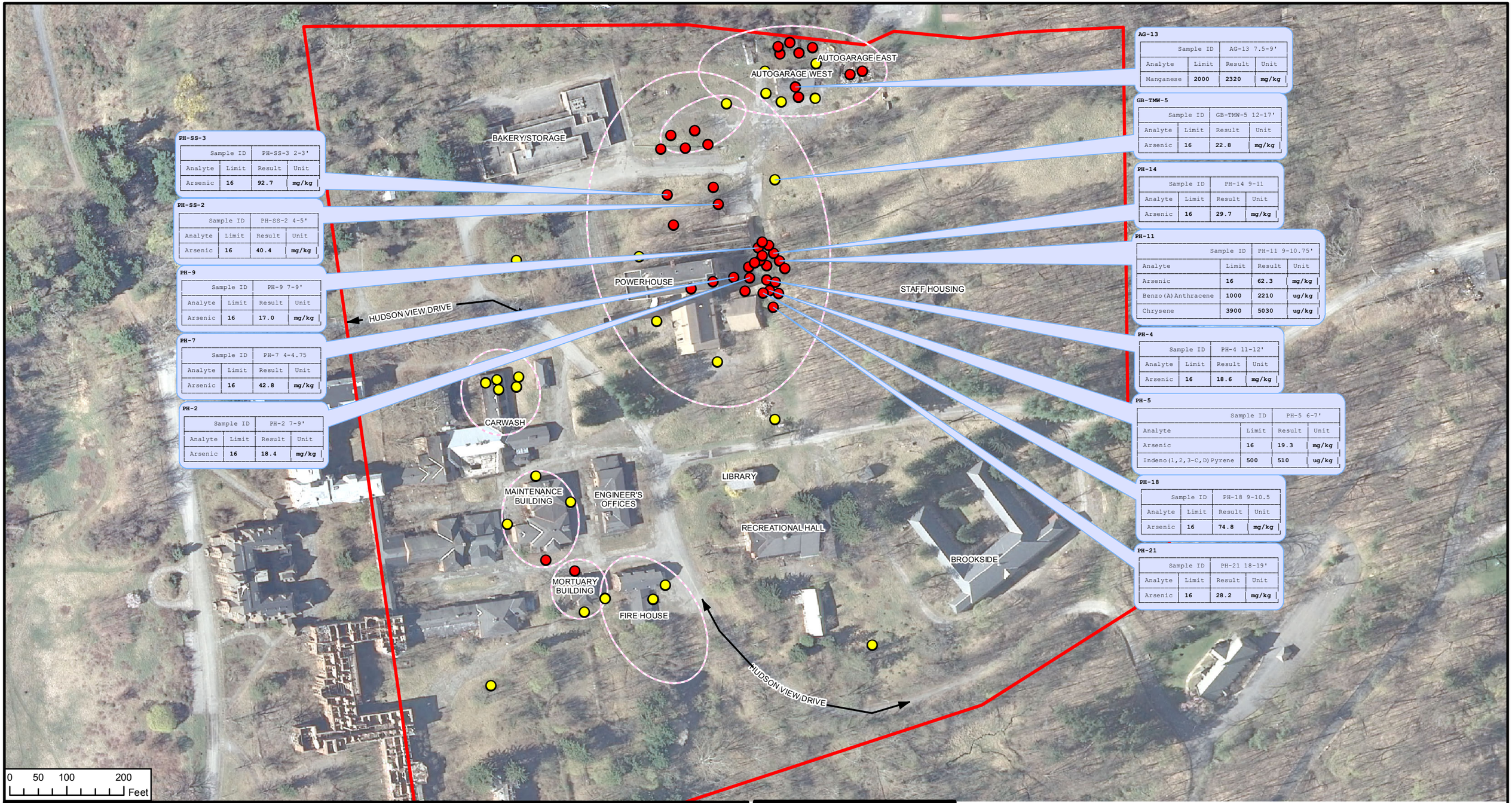

PH-SS-3

Sample ID		PH-SS-3 2-3'	
Analyte	Limit	Result	Unit
Arsenic	16	92.7	mg/kg

PH-SS-2

Sample ID		PH-SS-2 4-5'	
Analyte	Limit	Result	Unit
Arsenic	16	40.4	mg/kg

PH-9

Sample ID		PH-9 7-9'	
Analyte	Limit	Result	Unit
Arsenic	16	17.0	mg/kg

PH-7

Sample ID		PH-7 4-4.75	
Analyte	Limit	Result	Unit
Arsenic	16	42.8	mg/kg

PH-2

Sample ID		PH-2 7-9'	
Analyte	Limit	Result	Unit
Arsenic	16	18.4	mg/kg

AG-13

Sample ID		AG-13 7.5-9'	
Analyte	Limit	Result	Unit
Manganese	2000	2320	mg/kg

GB-TMW-5

Sample ID		GB-TMW-5 12-17'	
Analyte	Limit	Result	Unit
Arsenic	16	22.8	mg/kg

PH-14

Sample ID		PH-14 9-11	
Analyte	Limit	Result	Unit
Arsenic	16	29.7	mg/kg

PH-11

Sample ID		PH-11 9-10.75'	
Analyte	Limit	Result	Unit
Arsenic	16	62.3	mg/kg
Benzo(A)Anthracene	1000	2210	ug/kg
Chrysene	3900	5030	ug/kg

PH-4

Sample ID		PH-4 11-12'	
Analyte	Limit	Result	Unit
Arsenic	16	18.6	mg/kg

PH-5

Sample ID		PH-5 6-7'	
Analyte	Limit	Result	Unit
Arsenic	16	19.3	mg/kg
Indeno(1,2,3-C,D)Pyrene	500	510	ug/kg

PH-18

Sample ID		PH-18 9-10.5	
Analyte	Limit	Result	Unit
Arsenic	16	74.8	mg/kg

PH-21

Sample ID		PH-21 18-19'	
Analyte	Limit	Result	Unit
Arsenic	16	28.2	mg/kg

SOIL BORING LOCATIONS - ANALYTES IN SOIL AT CONCENTRATIONS EXCEEDING RRSCOS

HUDSON RIVER PSYCHIATRIC CENTER - NORTH BCP SITE, REMEDIAL INVESTIGATION REPORT
TOWN OF POUGHKEEPSIE, DUTCHESS COUNTY, NEW YORK

PVE Sheffler

Aerial Image: NYSGIS Clearinghouse
Dutchess County 2013

48 Springside Avenue
Poughkeepsie, New York 12603
Phone: (845) 454-2544
Fax: (845) 454-2655

FIGURE 10

DATE:	1/20/2015
SCALE:	As Indicated
PROJECT NUMBER:	560909

ALL LOCATIONS APPROXIMATE

Legend

SAMPLE LOCATION TYPE

- Subsurface Soil
- Surface and Subsurface Soil

- BCP Boundary
- Area of Concern Boundary

Figure 11 – Groundwater Class GA Exceedances

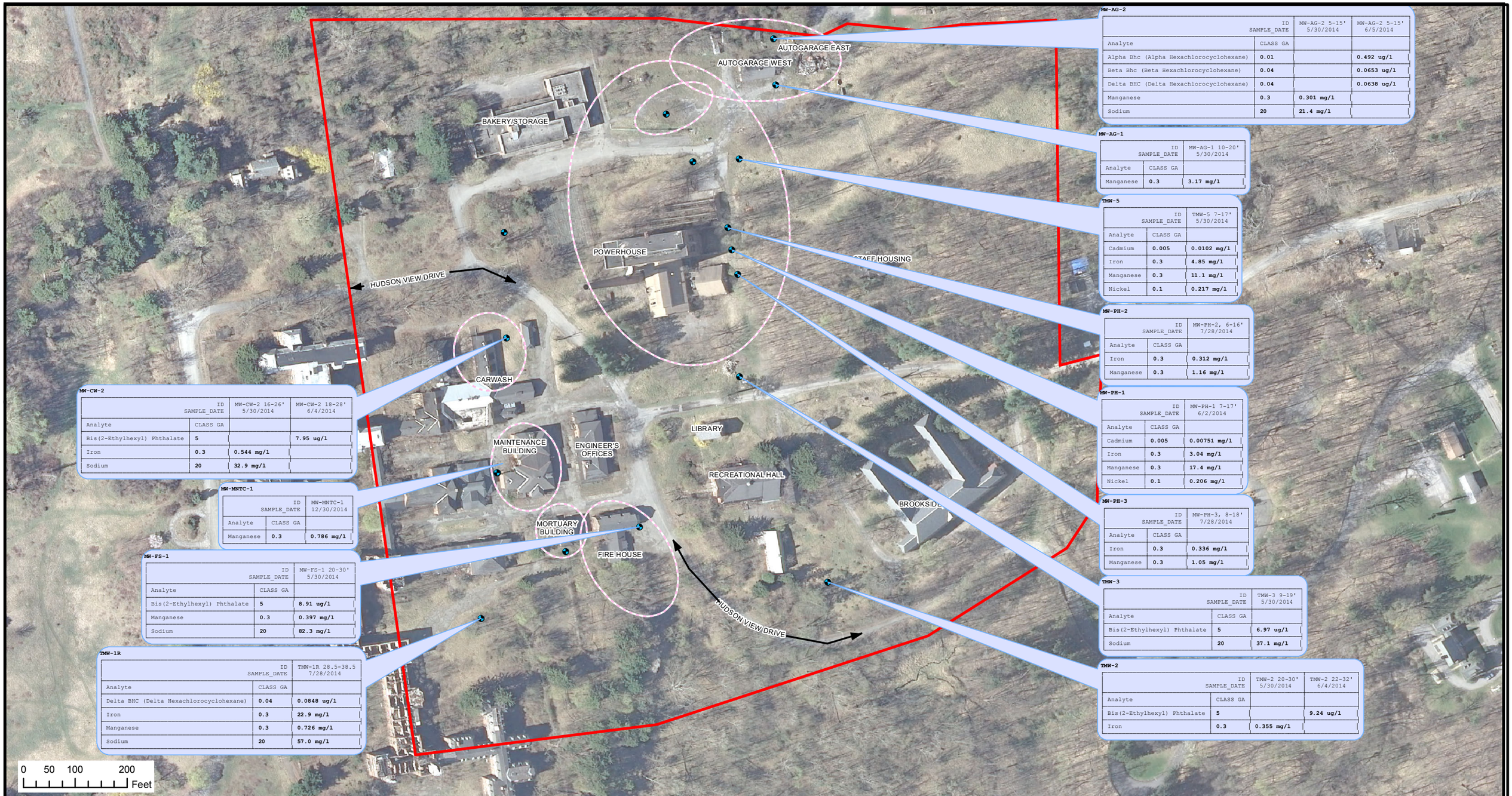

MW-AG-2

ID / SAMPLE_DATE		MW-AG-2 5-15' 5/30/2014	MW-AG-2 5-15' 6/5/2014
Analyte	CLASS GA		
Alpha Bhc (Alpha Hexachlorocyclohexane)	0.01		0.492 ug/1
Beta Bhc (Beta Hexachlorocyclohexane)	0.04		0.0653 ug/1
Delta BHC (Delta Hexachlorocyclohexane)	0.04		0.0638 ug/1
Manganese	0.3	0.301 mg/1	
Sodium	20	21.4 mg/1	

MW-AG-1

ID / SAMPLE_DATE		MW-AG-1 10-20' 5/30/2014
Analyte	CLASS GA	
Manganese	0.3	3.17 mg/1

TMW-5

ID / SAMPLE_DATE		TMW-5 7-17' 5/30/2014
Analyte	CLASS GA	
Cadmium	0.005	0.0102 mg/1
Iron	0.3	4.85 mg/1
Manganese	0.3	11.1 mg/1
Nickel	0.1	0.217 mg/1

MW-PH-2

ID / SAMPLE_DATE		MW-PH-2, 6-16' 7/28/2014
Analyte	CLASS GA	
Iron	0.3	0.312 mg/1
Manganese	0.3	1.16 mg/1

MW-PH-1

ID / SAMPLE_DATE		MW-PH-1 7-17' 6/2/2014
Analyte	CLASS GA	
Cadmium	0.005	0.00751 mg/1
Iron	0.3	3.04 mg/1
Manganese	0.3	17.4 mg/1
Nickel	0.1	0.206 mg/1

MW-PH-3

ID / SAMPLE_DATE		MW-PH-3, 8-18' 7/28/2014
Analyte	CLASS GA	
Iron	0.3	0.336 mg/1
Manganese	0.3	1.05 mg/1

TMW-3

ID / SAMPLE_DATE		TMW-3 9-19' 5/30/2014
Analyte	CLASS GA	
Bis(2-Ethylhexyl) Phthalate	5	6.97 ug/1
Sodium	20	37.1 mg/1

TMW-2

ID / SAMPLE_DATE		TMW-2 20-30' 5/30/2014	TMW-2 22-32' 6/4/2014
Analyte	CLASS GA		
Bis(2-Ethylhexyl) Phthalate	5		9.24 ug/1
Iron	0.3	0.355 mg/1	

MW-CW-2

ID / SAMPLE_DATE		MW-CW-2 16-26' 5/30/2014	MW-CW-2 18-28' 6/4/2014
Analyte	CLASS GA		
Bis(2-Ethylhexyl) Phthalate	5		7.95 ug/1
Iron	0.3	0.544 mg/1	
Sodium	20	32.9 mg/1	

MW-MNTC-1

ID / SAMPLE_DATE		MW-MNTC-1 12/30/2014
Analyte	CLASS GA	
Manganese	0.3	0.786 mg/1

MW-FS-1

ID / SAMPLE_DATE		MW-FS-1 20-30' 5/30/2014
Analyte	CLASS GA	
Bis(2-Ethylhexyl) Phthalate	5	8.91 ug/1
Manganese	0.3	0.397 mg/1
Sodium	20	82.3 mg/1

TMW-1R

ID / SAMPLE_DATE		TMW-1R 28.5-38.5 7/28/2014
Analyte	CLASS GA	
Delta BHC (Delta Hexachlorocyclohexane)	0.04	0.0848 ug/1
Iron	0.3	22.9 mg/1
Manganese	0.3	0.726 mg/1
Sodium	20	57.0 mg/1

GROUNDWATER SAMPLE LOCATIONS - ANALYTES IN GROUNDWATER EXCEEDING CLASS GA GROUNDWATER STANDARDS

HUDSON RIVER PSYCHIATRIC CENTER - NORTH BCP SITE, REMEDIAL INVESTIGATION REPORT
POUGHKEEPSIE, DUTCHESS COUNTY, NEW YORK

FIGURE 11

DATE:	1/28/2015
SCALE:	As Indicated
PROJECT NUMBER:	560909

ALL LOCATIONS APPROXIMATE

Legend

SAMPLE LOCATION TYPE
- Groundwater Well
- BCP Boundary
- Area of Concern Boundary

PVE Sheffler

48 Springside Avenue
Poughkeepsie, New York 12603
Phone: (845) 454-2544
Fax: (845) 454-2655

Aerial Image: NYSGIS Clearinghouse
Dutchess County 2013

Figure 12 – Vapor Sample Exceedances

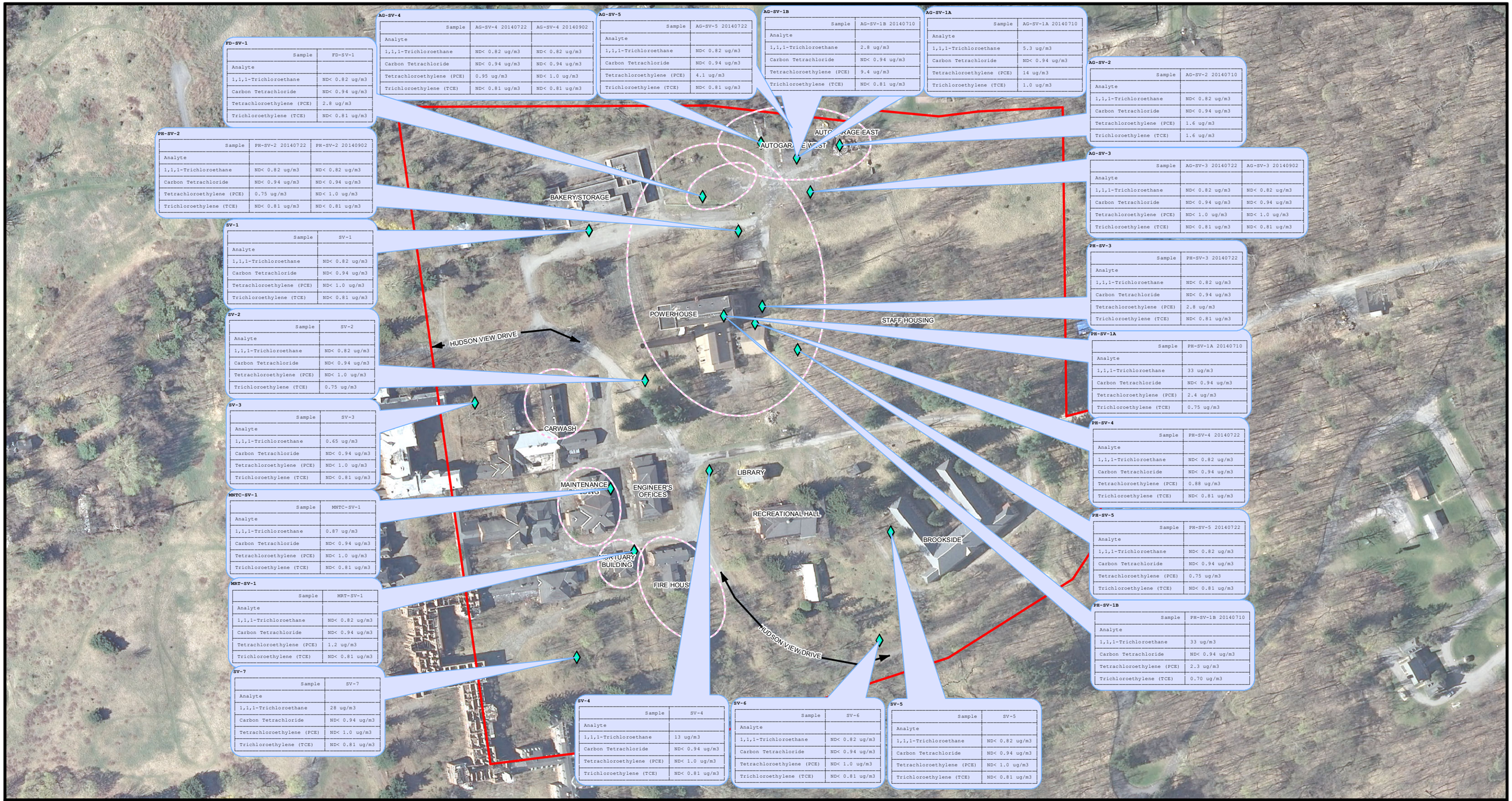

AG-SV-4

Sample	AG-SV-4 20140722	AG-SV-4 20140902
Analyte		
1,1,1-Trichloroethane	ND< 0.82 ug/m3	ND< 0.82 ug/m3
Carbon Tetrachloride	ND< 0.94 ug/m3	ND< 0.94 ug/m3
Tetrachloroethylene (PCE)	0.95 ug/m3	ND< 1.0 ug/m3
Trichloroethylene (TCE)	ND< 0.81 ug/m3	ND< 0.81 ug/m3

AG-SV-5

Sample	AG-SV-5 20140722
Analyte	
1,1,1-Trichloroethane	ND< 0.82 ug/m3
Carbon Tetrachloride	ND< 0.94 ug/m3
Tetrachloroethylene (PCE)	4.1 ug/m3
Trichloroethylene (TCE)	ND< 0.81 ug/m3

AG-SV-1B

Sample	AG-SV-1B 20140710
Analyte	
1,1,1-Trichloroethane	2.8 ug/m3
Carbon Tetrachloride	ND< 0.94 ug/m3
Tetrachloroethylene (PCE)	9.4 ug/m3
Trichloroethylene (TCE)	ND< 0.81 ug/m3

AG-SV-1A

Sample	AG-SV-1A 20140710
Analyte	
1,1,1-Trichloroethane	5.3 ug/m3
Carbon Tetrachloride	ND< 0.94 ug/m3
Tetrachloroethylene (PCE)	14 ug/m3
Trichloroethylene (TCE)	1.0 ug/m3

FD-SV-1

Sample	FD-SV-1
Analyte	
1,1,1-Trichloroethane	ND< 0.82 ug/m3
Carbon Tetrachloride	ND< 0.94 ug/m3
Tetrachloroethylene (PCE)	2.8 ug/m3
Trichloroethylene (TCE)	ND< 0.81 ug/m3

PH-SV-2

Sample	PH-SV-2 20140722	PH-SV-2 20140902
Analyte		
1,1,1-Trichloroethane	ND< 0.82 ug/m3	ND< 0.82 ug/m3
Carbon Tetrachloride	ND< 0.94 ug/m3	ND< 0.94 ug/m3
Tetrachloroethylene (PCE)	0.75 ug/m3	ND< 1.0 ug/m3
Trichloroethylene (TCE)	ND< 0.81 ug/m3	ND< 0.81 ug/m3

SV-1

Sample	SV-1
Analyte	
1,1,1-Trichloroethane	ND< 0.82 ug/m3
Carbon Tetrachloride	ND< 0.94 ug/m3
Tetrachloroethylene (PCE)	ND< 1.0 ug/m3
Trichloroethylene (TCE)	ND< 0.81 ug/m3

SV-2

Sample	SV-2
Analyte	
1,1,1-Trichloroethane	ND< 0.82 ug/m3
Carbon Tetrachloride	ND< 0.94 ug/m3
Tetrachloroethylene (PCE)	ND< 1.0 ug/m3
Trichloroethylene (TCE)	0.75 ug/m3

SV-3

Sample	SV-3
Analyte	
1,1,1-Trichloroethane	0.65 ug/m3
Carbon Tetrachloride	ND< 0.94 ug/m3
Tetrachloroethylene (PCE)	ND< 1.0 ug/m3
Trichloroethylene (TCE)	ND< 0.81 ug/m3

MNTC-SV-1

Sample	MNTC-SV-1
Analyte	
1,1,1-Trichloroethane	0.87 ug/m3
Carbon Tetrachloride	ND< 0.94 ug/m3
Tetrachloroethylene (PCE)	ND< 1.0 ug/m3
Trichloroethylene (TCE)	ND< 0.81 ug/m3

MRT-SV-1

Sample	MRT-SV-1
Analyte	
1,1,1-Trichloroethane	ND< 0.82 ug/m3
Carbon Tetrachloride	ND< 0.94 ug/m3
Tetrachloroethylene (PCE)	1.2 ug/m3
Trichloroethylene (TCE)	ND< 0.81 ug/m3

SV-7

Sample	SV-7
Analyte	
1,1,1-Trichloroethane	28 ug/m3
Carbon Tetrachloride	ND< 0.94 ug/m3
Tetrachloroethylene (PCE)	ND< 1.0 ug/m3
Trichloroethylene (TCE)	ND< 0.81 ug/m3

SV-4

Sample	SV-4
Analyte	
1,1,1-Trichloroethane	13 ug/m3
Carbon Tetrachloride	ND< 0.94 ug/m3
Tetrachloroethylene (PCE)	ND< 1.0 ug/m3
Trichloroethylene (TCE)	ND< 0.81 ug/m3

SV-6

Sample	SV-6
Analyte	
1,1,1-Trichloroethane	ND< 0.82 ug/m3
Carbon Tetrachloride	ND< 0.94 ug/m3
Tetrachloroethylene (PCE)	ND< 1.0 ug/m3
Trichloroethylene (TCE)	ND< 0.81 ug/m3

SV-5

Sample	SV-5
Analyte	
1,1,1-Trichloroethane	ND< 0.82 ug/m3
Carbon Tetrachloride	ND< 0.94 ug/m3
Tetrachloroethylene (PCE)	ND< 1.0 ug/m3
Trichloroethylene (TCE)	ND< 0.81 ug/m3

AG-SV-2

Sample	AG-SV-2 20140710
Analyte	
1,1,1-Trichloroethane	ND< 0.82 ug/m3
Carbon Tetrachloride	ND< 0.94 ug/m3
Tetrachloroethylene (PCE)	1.6 ug/m3
Trichloroethylene (TCE)	1.6 ug/m3

AG-SV-3

Sample	AG-SV-3 20140722	AG-SV-3 20140902
Analyte		
1,1,1-Trichloroethane	ND< 0.82 ug/m3	ND< 0.82 ug/m3
Carbon Tetrachloride	ND< 0.94 ug/m3	ND< 0.94 ug/m3
Tetrachloroethylene (PCE)	ND< 1.0 ug/m3	ND< 1.0 ug/m3
Trichloroethylene (TCE)	ND< 0.81 ug/m3	ND< 0.81 ug/m3

PH-SV-3

Sample	PH-SV-3 20140722
Analyte	
1,1,1-Trichloroethane	ND< 0.82 ug/m3
Carbon Tetrachloride	ND< 0.94 ug/m3
Tetrachloroethylene (PCE)	2.8 ug/m3
Trichloroethylene (TCE)	ND< 0.81 ug/m3

PH-SV-1A

Sample	PH-SV-1A 20140710
Analyte	
1,1,1-Trichloroethane	33 ug/m3
Carbon Tetrachloride	ND< 0.94 ug/m3
Tetrachloroethylene (PCE)	2.4 ug/m3
Trichloroethylene (TCE)	0.75 ug/m3

PH-SV-4

Sample	PH-SV-4 20140722
Analyte	
1,1,1-Trichloroethane	ND< 0.82 ug/m3
Carbon Tetrachloride	ND< 0.94 ug/m3
Tetrachloroethylene (PCE)	0.88 ug/m3
Trichloroethylene (TCE)	ND< 0.81 ug/m3

PH-SV-5

Sample	PH-SV-5 20140722
Analyte	
1,1,1-Trichloroethane	ND< 0.82 ug/m3
Carbon Tetrachloride	ND< 0.94 ug/m3
Tetrachloroethylene (PCE)	0.75 ug/m3
Trichloroethylene (TCE)	ND< 0.81 ug/m3

PH-SV-1B

Sample	PH-SV-1B 20140710
Analyte	
1,1,1-Trichloroethane	33 ug/m3
Carbon Tetrachloride	ND< 0.94 ug/m3
Tetrachloroethylene (PCE)	2.3 ug/m3
Trichloroethylene (TCE)	0.70 ug/m3

SOIL VAPOR SAMPLE LOCATIONS - NYSDOH CONSTITUENTS OF CONCERN

HUDSON RIVER PSYCHIATRIC CENTER - NORTH BCP SITE, REMEDIAL INVESTIGATION REPORT
TOWN OF POUGHKEEPSIE
DUTCHESS COUNTY, NEW YORK

PVE Sheffler

Aerial Image: NYSGIS Clearinghouse
Dutchess County 2013

48 Springside Avenue
Poughkeepsie, New York 12603
Phone: (845) 454-2544
Fax: (845) 454-2655

FIGURE 12

DATE:	1/20/2015
SCALE:	As Indicated
PROJECT NUMBER:	560909

ALL LOCATIONS APPROXIMATE

Legend

SAMPLE LOCATION TYPE
- Soil Vapor
- BCP Boundary
- Area of Concern Boundary

Figure 13 – Lithology Cross Section Locations

LITHOLOGY CROSS SECTIONS

AOC-1 - POWER HOUSE, HUDSON RIVER PSYCHIATRIC CENTER
POUGHKEEPSIE, NEW YORK

FIGURE 13

DATE:	4/20/2015
SCALE:	As Indicated
PROJECT NUMBER:	560909

ALL LOCATIONS APPROXIMATE

PVE Sheffler
Engineering • Survey • Environmental

48 Springside Avenue
Poughkeepsie, New York 12603
Phone: (845) 454-2544
Fax: (845) 454-2655

Figure 14 – East-West Lithology Cross Section (B-B^1)

East-West Cross-Section (B-B')

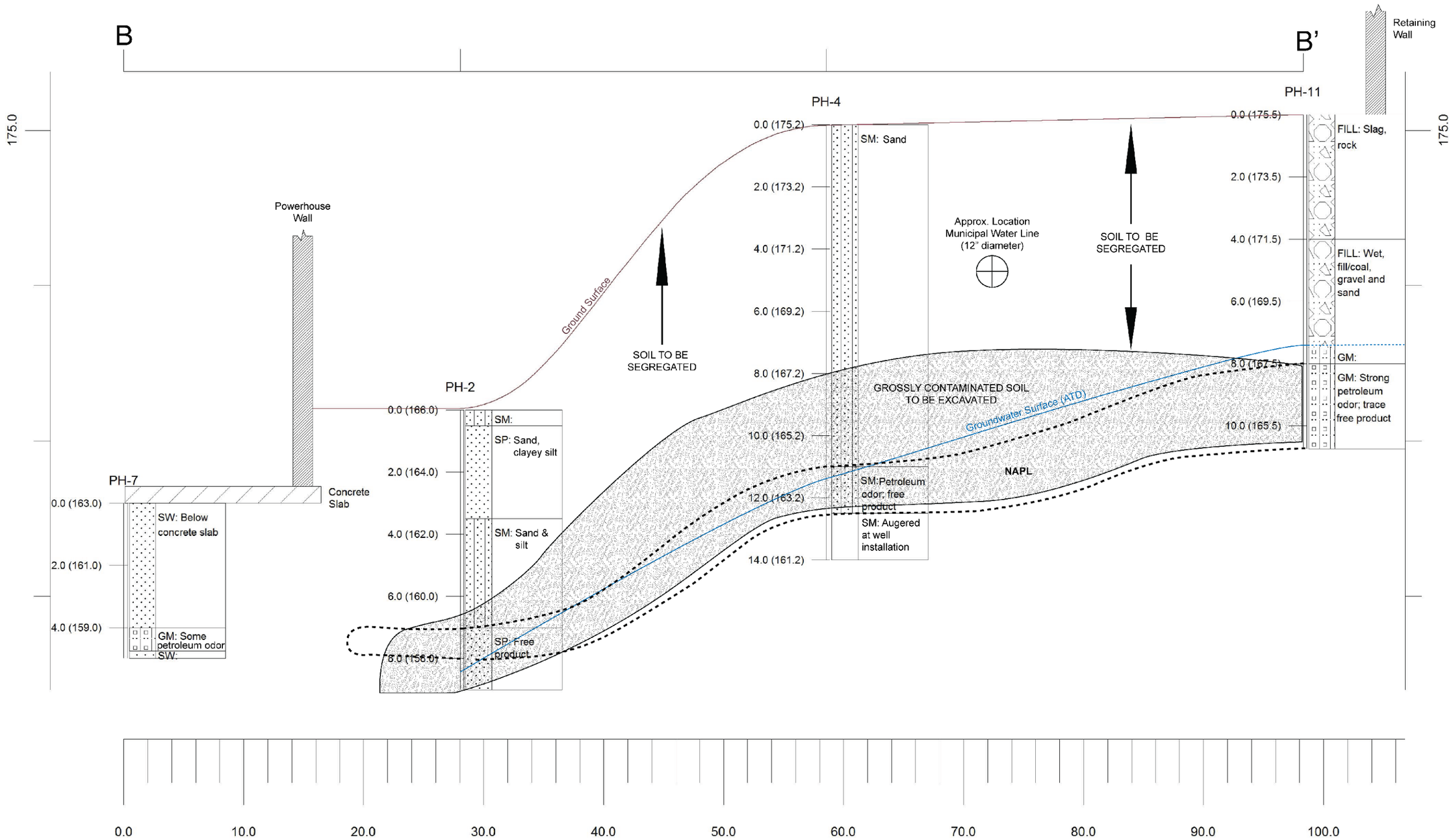

Legend

- NAPL
- Estimated NAPL
- Groundwater Level
- Estimated Groundwater Level (ATD = At Time of Drilling)

EAST-WEST LITHOLOGY CROSS-SECTION (B-B')

HUDSON RIVER PSYCHIATRIC CENTER - POWERHOUSE AREA
TOWN OF POUGHKEEPSIE
DUTCHESS COUNTY, NEW YORK

ALL UNITS IN FEET

PVE Sheffler
Engineering • Survey • Environmental
48 Springside Avenue
Poughkeepsie, New York 12603
Phone: (845) 454-2544
Fax: (845) 454-2655

FIGURE 14	
DATE:	5/11/2015
SCALE:	As Indicated
PROJECT NUMBER:	560909

ALL LOCATIONS APPROXIMATE

Figure 15 – North-South Lithology Cross Section (A-A^{1})

North-South Cross-Section (A-A')

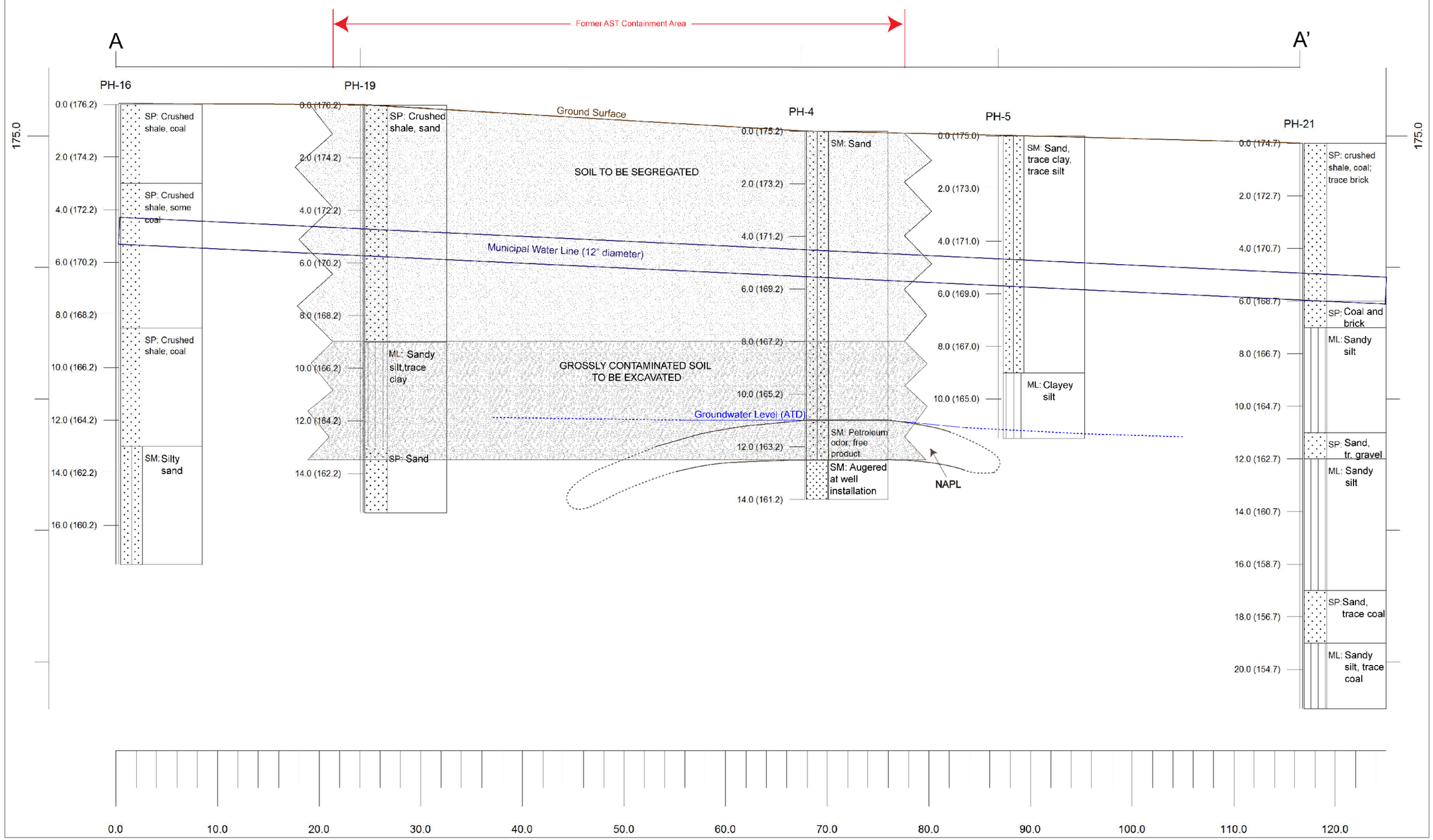

Legend

- NAPL
- Estimated NAPL
- Groundwater Level
- Estimated Groundwater Level (ATD = At Time of Drilling)

NORTH-SOUTH LITHOLOGY CROSS-SECTION (A-A')

HUDSON RIVER PSYCHIATRIC CENTER - POWERHOUSE AREA
TOWN OF POUGHKEEPSIE
DUTCHESS COUNTY, NEW YORK

ALL UNITS IN FEET

PVE Sheffler
Engineering • Survey • Environmental
48 Springside Avenue
Poughkeepsie, New York 12603
Phone: (845) 454-2544
Fax: (845) 454-2655

FIGURE 15	
DATE:	5/11/2015
SCALE:	As Indicated
PROJECT NUMBER:	560909

ALL LOCATIONS APPROXIMATE

Figure 16 – Surface Soil Exceedances and Draft Cover Soil Area

SHALLOW SOIL SAMPLING LOCATIONS AND DRAFT COVER SOIL AREA

HUDSON RIVER PSYCHIATRIC CENTER - NORTH BCP SITE, REMEDIAL ACTION WORK PLAN
TOWN OF POUGHKEEPSIE
DUTCHESS COUNTY, NEW YORK

FIGURE 16

DATE:	2/17/2015
SCALE:	As Indicated
PROJECT NUMBER:	560909

ALL LOCATIONS APPROXIMATE

Legend

- Surface Soil: Exceedence
- Surface Soil: No Exceedence
- BCP Boundary
- Area of Concern Boundary
- Proposed Cover Area
- Developed Area

PVE Sheffler

Aerial Image: NYSGIS Clearinghouse
Dutchess County 2013

48 Springside Avenue
Poughkeepsie, New York 12603
Phone: (845) 454-2544
Fax: (845) 454-2655

LIST OF TABLES

Table 1A – VOCs in Soil – AOC–1

TABLE 1A: Volatile Organic Compounds (VOCs) in Soil
AOC-1 - Power House and Former Coal Storage Area
Soil Sample Results (non-QA/QC)
Hudson River Psychiatric Center - North BCP Site, Poughkeepsie, NY
PVE Sheffler File #560909

	Date Sampled	5/7/2014		5/7/2014		5/7/2014		5/7/2014		5/7/2014		5/13/2014		5/7/2014		5/8/2014		5/8/2014		5/7/2014		5/8/2014		5/8/2014	
	Location	PH-1		PH-1		PH-1		PH-2		PH-2		PH-2		PH-3		PH-3		PH-3		PH-4		PH-4		PH-4	
	Sample ID	PH-1 0-2"		PH-1 1-2'		PH-1 2-3.25'		PH-2 0-2"		PH-2 1-2'		PH-2 7.5-8		PH-3 0-2"		PH-3 1-2		PH-3 2-3'		PH-4 0-2"		PH-4 1-2'		PH-4 11-12'	
Analyte	RRSCOs	Result	Q	Result	Q	Result	Q	Result	Q	Result	Q	Result	Q	Result	Q	Result	Q	Result	Q	Result	Q	Result	Q	Result	Q
VOCs (µg/kg)																									
1,1,1-Trichloroethane	100000	ND< 2.03	U	ND< 1.86	U	ND< 1.63	U	ND< 2.23	U	ND< 2.04	U	ND< 1.60	U	ND< 2.37	U	ND< 2.06	U	ND< 2.15	U	ND< 2.35	U	ND< 2.48	U	ND< 174	U
1,1,2,2-Tetrachloroethane		ND< 2.03	U	ND< 1.86	U	ND< 1.63	U	ND< 2.23	U	ND< 2.04	U	ND< 1.60	U	ND< 2.37	U	ND< 2.06	U	ND< 2.15	U	ND< 2.35	U	ND< 2.48	U	ND< 174	U
1,1,2-Trichloro-1,2,2-Trifluoroethane		ND< 2.03	U	ND< 1.86	U	ND< 1.63	U	ND< 2.23	U	ND< 2.04	U	ND< 1.60	U	ND< 2.37	U	ND< 2.06	U	ND< 2.15	U	ND< 2.35	U	ND< 2.48	U	ND< 174	U
1,1,2-Trichloroethane		ND< 2.03	U	ND< 1.86	U	ND< 1.63	U	ND< 2.23	U	ND< 2.04	U	ND< 1.60	U	ND< 2.37	U	ND< 2.06	U	ND< 2.15	U	ND< 2.35	U	ND< 2.48	U	ND< 174	U
1,1-Dichloroethane	26000	ND< 2.03	U	ND< 1.86	U	ND< 1.63	U	ND< 2.23	U	ND< 2.04	U	ND< 1.60	U	ND< 2.37	U	ND< 2.06	U	ND< 2.15	U	ND< 2.35	U	ND< 2.48	U	ND< 174	U
1,1-Dichloroethene	100000	ND< 2.03	U	ND< 1.86	U	ND< 1.63	U	ND< 2.23	U	ND< 2.04	U	ND< 1.60	U	ND< 2.37	U	ND< 2.06	U	ND< 2.15	U	ND< 2.35	U	ND< 2.48	U	ND< 174	U
1,2,3-Trichlorobenzene		ND< 5.06	U	ND< 4.65	U	ND< 4.07	U	ND< 5.58	U	ND< 5.09	U	ND< 4.00	U	ND< 5.93	U	ND< 5.15	U	ND< 5.38	U	ND< 5.86	U	ND< 6.19	U	ND< 436	U
1,2,4-Trichlorobenzene		ND< 5.06	U	ND< 4.65	U	ND< 4.07	U	ND< 5.58	U	ND< 5.09	U	ND< 4.00	U	ND< 5.93	U	ND< 5.15	U	ND< 5.38	U	ND< 5.86	U	ND< 6.19	U	ND< 436	U
1,2,4-Trimethylbenzene	52000	ND< 2.03	U	ND< 1.86	U	ND< 1.63	U	ND< 2.23	U	ND< 2.04	U	ND< 1.60	U	ND< 2.37	U	ND< 2.06	U	ND< 2.15	U	ND< 2.35	U	ND< 2.48	U	ND< 174	U
1,2-Dibromo-3-Chloropropane		ND< 10.1	U	ND< 9.29	U	ND< 8.13	U	ND< 11.2	U	ND< 10.2	U	ND< 7.99	U	ND< 11.9	U	ND< 10.3	U	ND< 10.8	U	ND< 11.7	U	ND< 12.4	U	ND< 872	U
1,2-Dibromoethane (Ethylene Dibromide)		ND< 2.03	U	ND< 1.86	U	ND< 1.63	U	ND< 2.23	U	ND< 2.04	U	ND< 1.60	U	ND< 2.37	U	ND< 2.06	U	ND< 2.15	U	ND< 2.35	U	ND< 2.48	U	ND< 174	U
1,2-Dichlorobenzene	100000	ND< 2.03	U	ND< 1.86	U	ND< 1.63	U	ND< 2.23	U	ND< 2.04	U	ND< 1.60	U	ND< 2.37	U	ND< 2.06	U	ND< 2.15	U	ND< 2.35	U	ND< 2.48	U	ND< 174	U
1,2-Dichloroethane	3100	ND< 2.03	U	ND< 1.86	U	ND< 1.63	U	ND< 2.23	U	ND< 2.04	U	ND< 1.60	U	ND< 2.37	U	ND< 2.06	U	ND< 2.15	U	ND< 2.35	U	ND< 2.48	U	ND< 174	U
1,2-Dichloropropane		ND< 2.03	U	ND< 1.86	U	ND< 1.63	U	ND< 2.23	U	ND< 2.04	U	ND< 1.60	U	ND< 2.37	U	ND< 2.06	U	ND< 2.15	U	ND< 2.35	U	ND< 2.48	U	ND< 174	U
1,3,5-Trimethylbenzene (Mesitylene)	52000	ND< 2.03	U	ND< 1.86	U	ND< 1.63	U	ND< 2.23	U	ND< 2.04	U	ND< 1.60	U	ND< 2.37	U	ND< 2.06	U	ND< 2.15	U	ND< 2.35	U	ND< 2.48	U	ND< 174	U
1,3-Dichlorobenzene	49000	ND< 2.03	U	ND< 1.86	U	ND< 1.63	U	ND< 2.23	U	ND< 2.04	U	ND< 1.60	U	ND< 2.37	U	ND< 2.06	U	ND< 2.15	U	ND< 2.35	U	ND< 2.48	U	ND< 174	U
1,4-Dichlorobenzene	13000	ND< 2.03	U	ND< 1.86	U	ND< 1.63	U	ND< 2.23	U	ND< 2.04	U	ND< 1.60	U	ND< 2.37	U	ND< 2.06	U	ND< 2.15	U	ND< 2.35	U	ND< 2.48	U	ND< 174	U
1,4-Dioxane (P-Dioxane)	13000	ND< 20.3	U	ND< 18.6	U	ND< 16.3	U	ND< 22.3	U	ND< 20.4	U	ND< 16.0	U	ND< 23.7	U	ND< 20.6	U	ND< 21.5	U	ND< 23.5	U	ND< 24.8	U	ND< 1740	U
2-Hexanone		ND< 5.06	U	ND< 4.65	U	ND< 4.07	U	ND< 5.58	U	ND< 5.09	U	ND< 4.00	U	ND< 5.93	U	ND< 5.15	U	ND< 5.38	U	ND< 5.86	U	ND< 6.19	U	ND< 436	U
Acetone	100000	ND< 10.1	U	ND< 9.29	U	ND< 8.13	U	ND< 11.2	U	14.5		79.7		ND< 11.9	U	81.3		40.8		ND< 11.7	U	50.5		ND< 872	U
Benzene	4800	ND< 2.03	U	ND< 1.86	U	ND< 1.63	U	ND< 2.23	U	ND< 2.04	U	ND< 1.60	U	ND< 2.37	U	ND< 2.06	U	ND< 2.15	U	ND< 2.35	U	ND< 2.48	U	ND< 174	U
Bromochloromethane		ND< 5.06	U	ND< 4.65	U	ND< 4.07	U	ND< 5.58	U	ND< 5.09	U	ND< 4.00	U	ND< 5.93	U	ND< 5.15	U	ND< 5.38	U	ND< 5.86	U	ND< 6.19	U	ND< 436	U
Bromodichloromethane		ND< 2.03	U	ND< 1.86	U	ND< 1.63	U	ND< 2.23	U	ND< 2.04	U	ND< 1.60	U	ND< 2.37	U	ND< 2.06	U	ND< 2.15	U	ND< 2.35	U	ND< 2.48	U	ND< 174	U
Bromoform		ND< 5.06	U	ND< 4.65	U	ND< 4.07	U	ND< 5.58	U	ND< 5.09	U	ND< 4.00	U	ND< 5.93	U	ND< 5.15	U	ND< 5.38	U	ND< 5.86	U	ND< 6.19	U	ND< 436	U
Bromomethane		ND< 2.03	U	ND< 1.86	U	ND< 1.63	U	ND< 2.23	U	ND< 2.04	U	ND< 1.60	U	ND< 2.37	U	ND< 2.06	U	ND< 2.15	U	ND< 2.35	U	ND< 2.48	U	ND< 174	U
Carbon Disulfide		ND< 2.03	U	ND< 1.86	U	ND< 1.63	U	ND< 2.23	U	ND< 2.04	U	3.51		ND< 2.37	U	1.21		ND< 2.15	U	ND< 2.35	U	5.61		ND< 174	U
Carbon Tetrachloride	2400	ND< 2.03	U	ND< 1.86	U	ND< 1.63	U	ND< 2.23	U	ND< 2.04	U	ND< 1.60	U	ND< 2.37	U	ND< 2.06	U	ND< 2.15	U	ND< 2.35	U	ND< 2.48	U	ND< 174	U
Chlorobenzene	100000	ND< 2.03	U	ND< 1.86	U	ND< 1.63	U	ND< 2.23	U	ND< 2.04	U	ND< 1.60	U	ND< 2.37	U	ND< 2.06	U	ND< 2.15	U	ND< 2.35	U	ND< 2.48	U	ND< 174	U
Chloroethane		ND< 2.03	U	ND< 1.86	U	ND< 1.63	U	ND< 2.23	U	ND< 2.04	U	ND< 1.60	U	ND< 2.37	U	ND< 2.06	U	ND< 2.15	U	ND< 2.35	U	ND< 2.48	U	ND< 174	U
Chloroform	49000	ND< 2.03	U	ND< 1.86	U	ND< 1.63	U	ND< 2.23	U	ND< 2.04	U	ND< 1.60	U	ND< 2.37	U	ND< 2.06	U	ND< 2.15	U	ND< 2.35	U	ND< 2.48	U	ND< 174	U
Chloromethane		ND< 2.03	U	ND< 1.86	U	ND< 1.63	U	ND< 2.23	U	ND< 2.04	U	ND< 1.60	U	ND< 2.37	U	ND< 2.06	U	ND< 2.15	U	ND< 2.35	U	ND< 2.48	U	ND< 174	U
Cis-1,2-Dichloroethylene	100000	ND< 2.03	U	ND< 1.86	U	ND< 1.63	U	ND< 2.23	U	ND< 2.04	U	ND< 1.60	U	ND< 2.37	U	ND< 2.06	U	ND< 2.15	U	ND< 2.35	U	ND< 2.48	U	ND< 174	U
Cis-1,3-Dichloropropene		ND< 2.03	U	ND< 1.86	U	ND< 1.63	U	ND< 2.23	U	ND< 2.04	U	ND< 1.60	U	ND< 2.37	U	ND< 2.06	U	ND< 2.15	U	ND< 2.35	U	ND< 2.48	U	ND< 174	U
Cyclohexane		ND< 10.1	U	ND< 9.29	U	ND< 8.13	U	ND< 11.2	U	ND< 10.2	U	ND< 7.99	U	ND< 11.9	U	ND< 10.3	U	ND< 10.8	U	ND< 11.7	U	ND< 12.4	U	ND< 872	U
Cymene		ND< 2.03	U	ND< 1.86	U	ND< 1.63	U	63.3		ND< 2.04	U	ND< 1.60	U	ND< 2.37	U	ND< 2.06	U	ND< 2.15	U	ND< 2.35	U	ND< 2.48	U	ND< 174	U
Dibromochloromethane		ND< 2.03	U	ND< 1.86	U	ND< 1.63	U	ND< 2.23	U	ND< 2.04	U	ND< 1.60	U	ND< 2.37	U	ND< 2.06	U	ND< 2.15	U	ND< 2.35	U	ND< 2.48	U	ND< 174	U
Dichlorodifluoromethane		ND< 2.03	U	ND< 1.86	U	ND< 1.63	U	ND< 2.23	U	ND< 2.04	U	ND< 1.60	U	ND< 2.37	U	ND< 2.06	U	ND< 2.15	U	ND< 2.35	U	ND< 2.48	U	ND< 174	U
Ethylbenzene	41000	ND< 2.03	U	ND< 1.86	U	ND< 1.63	U	ND< 2.23	U	ND< 2.04	U	ND< 1.60	U	ND< 2.37	U	ND< 2.06	U	ND< 2.15	U	ND< 2.35	U	ND< 2.48	U	ND< 174	U
Isopropylbenzene (Cumene)		ND< 2.03	U	ND< 1.86	U	ND< 1.63	U	ND< 2.23	U	ND< 2.04	U	7.91		ND< 2.37	U	ND< 2.06	U	ND< 2.15	U	ND< 2.35	U	ND< 2.48	U	120	
Methyl Acetate		ND< 2.03	U	ND< 1.86	U	ND< 1.63	U	ND< 2.23	U	ND< 2.04	U	ND< 1.60	U	ND< 2.37	U	25.6		3.19		ND< 2.35	U	538	E	ND< 174	U
Methyl Ethyl Ketone (2-Butanone)	100000	ND< 10.1	U	ND< 9.29	U	ND< 8.13	U	ND< 11.2	U	ND< 10.2	U	15.4		ND< 11.9	U	5.84		ND< 10.8	U	ND< 11.7	U	7.59		ND< 872	U
Methyl Isobutyl Ketone (4-Methyl-2-Pentanone)		ND< 5.06	U	ND< 4.65	U	ND< 4.07	U	ND< 5.58	U	ND< 5.09	U	ND< 4.00	U	ND< 5.93	U	ND< 5.15	U	ND< 5.38	U	ND< 5.86	U	ND< 6.19	U	ND< 436	U
Methyl Tert-Butyl Ether (MTBE)	100000	ND< 2.03	U	ND< 1.86	U	ND< 1.63	U	ND< 2.23	U	ND< 2.04	U	ND< 1.60	U	ND< 2.37	U	ND< 2.06	U	ND< 2.15	U	ND< 2.35	U	ND< 2.48	U	ND< 174	U
Methylcyclohexane		ND< 2.03	U	ND< 1.86	U	ND< 1.63	U	ND< 2.23	U	ND< 2.04	U	78.4		ND< 2.37	U	ND< 2.06	U	ND< 2.15	U	ND< 2.35	U	ND< 2.48	U	266	
Methylene Chloride	100000	ND< 5.06	U	ND< 4.65	U	ND< 4.07	U	ND< 5.58	U	ND< 5.09	U	ND< 4.00	U	ND< 5.93	U	ND< 5.15	U	ND< 5.38	U	ND< 5.86	U	ND< 6.19	U	ND< 436	U
M-P-Xylene		ND< 2.03	U	ND< 1.86	U	ND< 1.63	U	ND< 2.23	U	ND< 2.04	U	ND< 1.60	U	ND< 2.37	U	ND< 2.06	U	ND< 2.15	U	ND< 2.35	U	ND< 2.48	U	ND< 174	U
Naphthalene	100000	ND< 5.06	U	ND< 4.65	U	ND< 4.07	U	ND< 5.58	U	ND< 5.09	U	ND< 4.00	U	ND< 5.93	U	ND< 5.15	U	ND< 5.38	U	ND< 5.86	U	ND< 6.19	U	ND< 436	U
N-Butylbenzene	100000	ND< 2.03	U	ND< 1.86	U	ND< 1.63	U	ND< 2.23	U	ND< 2.04	U	30.9		ND< 2.37	U	ND< 2.06	U	ND< 2.15	U	ND< 2.35	U	ND< 2.48	U	957	
N-Propylbenzene	100000	ND< 2.03	U	ND< 1.86	U	ND< 1.63	U	ND< 2.23	U	ND< 2.04	U	3.54		ND< 2.37	U	ND< 2.06	U	ND< 2.15	U	ND< 2.35	U	ND< 2.48	U	220	
O-Xylene (1,2-Dimethylbenzene)		ND< 2.03	U	ND< 1.86	U	ND< 1.63	U	ND< 2.23	U	ND< 2.04	U	0.807	J	ND< 2.37	U	ND< 2.06	U	ND< 2.15	U	ND< 2.35	U	ND< 2.48	U	ND< 174	U
Sec-Butylbenzene	100000	ND< 2.03	U	ND< 1.86	U	ND< 1.63	U	ND< 2.23	U	ND< 2.04	U	43.7		ND< 2.37	U	ND< 2.06	U	ND< 2.15	U	ND< 2.35	U	ND< 2.48	U	349	
Styrene		ND< 5.06	U	ND< 4.65	U	ND< 4.07	U	ND< 5.58	U	ND< 5.09	U	ND< 4.00	U	ND< 5.93	U	ND< 5.15	U	ND< 5.38	U	ND< 5.86	U	ND< 6.19	U	ND< 436	U
T-Butylbenzene	100000	ND< 2.03	U	ND< 1.86	U	ND< 1.63	U	ND< 2.23	U	ND< 2.04	U	ND< 1.60	U	ND< 2.37	U	ND< 2.06	U	ND< 2.15	U	ND< 2.35	U	ND< 2.48	U	ND< 174	U
Tetrachloroethylene (PCE)	19000	ND< 2.03	U	ND< 1.86	U	ND< 1.63	U	ND< 2.23	U	ND< 2.04	U	ND< 1.60	U	ND< 2.37	U	ND< 2.06	U	ND< 2.15	U	ND< 2.35	U	ND< 2.48	U	ND< 174	U
Toluene	100000	ND< 2.03	U	ND< 1.86	U	ND< 1.63	U	ND< 2.23	U	ND< 2.04	U	ND< 1.60	U	ND< 2.37	U	ND< 2.06	U	ND< 2.15	U	ND< 2.35	U	ND< 2.48	U	ND< 174	U
Trans-1,2-Dichloroethene	100000	ND< 2.03	U	ND< 1.86	U	ND< 1.63	U	ND< 2.23	U	ND< 2.04	U	ND< 1.60	U	ND< 2.37	U	ND< 2.06	U	ND< 2.15	U	ND< 2.35	U	ND< 2.48	U	ND< 174	U
Trans-1,3-Dichloropropene		ND< 2.03	U	ND< 1.86	U	ND< 1.63	U	ND< 2.23	U	ND< 2.04	U	ND< 1.60	U	ND< 2.37	U	ND< 2.06	U	ND< 2.15	U	ND< 2.35	U	ND< 2.48	U	ND< 174	U
Trichloroethylene (TCE)	21000	ND< 2.03	U	ND< 1.86	U	ND< 1.63	U	ND< 2.23	U	ND< 2.04	U	ND< 1.60	U	ND< 2.37	U	ND< 2.06	U	ND< 2.15	U	ND< 2.35	U	ND< 2.48	U	ND< 174	U
Trichlorofluoromethane		ND< 2.03	U	ND< 1.86	U	ND< 1.63	U	ND< 2.23	U	ND< 2.04	U	ND< 1.60	U	ND< 2.37	U	ND< 2.06	U	ND< 2.15	U	ND< 2.35	U	ND< 2.48	U	ND< 174	U
Vinyl Chloride	900	ND< 2.03	U	ND< 1.86	U	ND< 1.63	U	ND< 2.23	U	ND< 2.04	U	ND< 1.60	U	ND< 2.37	U	ND< 2.06	U	ND< 2.15	U	ND< 2.35	U	ND< 2.48	U	ND< 174	U

NOTES:

1. Soil sample analytical results are compared to the New York State Department of Environmental Conservation (NYSDEC) Title 6 of the official compilation of New York Codes, Rules, and Regulations (NYCRR) Part 375 Restricted Residential Soil Cleanup Objectives (RRSCOs).
2. RRSCO exceedances are in bold and highlighted yellow.
3. ND = Not Detected
4. Results shown as "ND" with Reporting Limits exceeding RRSCOs are in bold.
5. VOCs = Volatile Organic Compounds
6. µg/kg = micrograms per kilogram.
7. Qualifier (Q) definitions are provided in the official lab reports.

TABLE 1A: Volatile Organic Compounds (VOCs) in Soil
AOC-1 - Power House and Former Coal Storage Area
Soil Sample Results (non-QA/QC)
Hudson River Psychiatric Center - North BCP Site, Poughkeepsie, NY
PVE Sheffler File #560909

	Date Sampled	5/7/2014		5/8/2014		5/8/2014		5/8/2014		5/8/2014		7/17/2014		7/17/2014		7/17/2014		7/17/2014		7/17/2014		7/17/2014		5/7/2014	
	Location	PH-5		PH-5		PH-5		PH-6		PH-6		PH-7		PH-7		PH-7		PH-8		PH-8		PH-8		PH-9	
	Sample ID	PH-5 0-2"		PH-5 1-2'		PH-5 6-7'		PH-6 1-2'		PH-6 4.5-5.5'		PH-7 0-2"		PH-7 1-2'		PH-7 4-4.75		PH-8 0-2"		PH-8 1-2'		PH-8 2.5-3.5'		PH-9 0-2"	
Analyte	RRSCOs	Result	Q	Result	Q	Result	Q	Result	Q	Result	Q	Result	Q	Result	Q	Result	Q	Result	Q	Result	Q	Result	Q	Result	Q
VOCs (µg/kg)																									
1,1,1-Trichloroethane	100000	ND< 2.22	U	ND< 2.22	U	ND< 2.27	U	ND< 2.05	U	ND< 1.96	U	ND< 225	U	ND< 2.30	U	ND< 162	U	ND< 2.05	U	ND< 2.36	U	ND< 1.91	U	ND< 2.24	U
1,1,2,2-Tetrachloroethane		ND< 2.22	U	ND< 2.22	U	ND< 2.27	U	ND< 2.05	U	ND< 1.96	U	ND< 225	U	ND< 2.30	U	ND< 162	U	ND< 2.05	U	ND< 2.36	U	ND< 1.91	U	ND< 2.24	U
1,1,2-Trichloro-1,2,2-Trifluoroethane		ND< 2.22	U	ND< 2.22	U	ND< 2.27	U	ND< 2.05	U	ND< 1.96	U	ND< 225	U	ND< 2.30	U	ND< 162	U	ND< 2.05	U	ND< 2.36	U	ND< 1.91	U	ND< 2.24	U
1,1,2-Trichloroethane		ND< 2.22	U	ND< 2.22	U	ND< 2.27	U	ND< 2.05	U	ND< 1.96	U	ND< 225	U	ND< 2.30	U	ND< 162	U	ND< 2.05	U	ND< 2.36	U	ND< 1.91	U	ND< 2.24	U
1,1-Dichloroethane	26000	ND< 2.22	U	ND< 2.22	U	ND< 2.27	U	ND< 2.05	U	ND< 1.96	U	ND< 225	U	ND< 2.30	U	ND< 162	U	ND< 2.05	U	ND< 2.36	U	ND< 1.91	U	ND< 2.24	U
1,1-Dichloroethene	100000	ND< 2.22	U	ND< 2.22	U	ND< 2.27	U	ND< 2.05	U	ND< 1.96	U	ND< 225	U	ND< 2.30	U	ND< 162	U	ND< 2.05	U	ND< 2.36	U	ND< 1.91	U	ND< 2.24	U
1,2,3-Trichlorobenzene		ND< 5.55	U	ND< 5.54	U	ND< 5.68	U	ND< 5.12	U	ND< 4.90	U	ND< 562	U	ND< 5.75	U	ND< 406	U	ND< 5.13	U	ND< 5.90	U	ND< 4.78	U	ND< 5.59	U
1,2,4-Trichlorobenzene		ND< 5.55	U	ND< 5.54	U	ND< 5.68	U	ND< 5.12	U	ND< 4.90	U	ND< 562	U	ND< 5.75	U	ND< 406	U	ND< 5.13	U	ND< 5.90	U	ND< 4.78	U	ND< 5.59	U
1,2,4-Trimethylbenzene	52000	ND< 2.22	U	ND< 2.22	U	ND< 2.27	U	ND< 2.05	U	ND< 1.96	U	ND< 225	U	ND< 2.30	U	ND< 162	U	ND< 2.05	U	ND< 2.36	U	ND< 1.91	U	ND< 2.24	U
1,2-Dibromo-3-Chloropropane		ND< 11.1	U	ND< 11.1	U	ND< 11.4	U	ND< 10.2	U	ND< 9.80	U	ND< 1120	U	ND< 11.5	U	ND< 812	U	ND< 10.3	U	ND< 11.8	U	ND< 9.56	U	ND< 11.2	U
1,2-Dibromoethane (Ethylene Dibromide)		ND< 2.22	U	ND< 2.22	U	ND< 2.27	U	ND< 2.05	U	ND< 1.96	U	ND< 225	U	ND< 2.30	U	ND< 162	U	ND< 2.05	U	ND< 2.36	U	ND< 1.91	U	ND< 2.24	U
1,2-Dichlorobenzene	100000	ND< 2.22	U	ND< 2.22	U	ND< 2.27	U	ND< 2.05	U	ND< 1.96	U	ND< 225	U	ND< 2.30	U	ND< 162	U	ND< 2.05	U	ND< 2.36	U	ND< 1.91	U	ND< 2.24	U
1,2-Dichloroethane	3100	ND< 2.22	U	ND< 2.22	U	ND< 2.27	U	ND< 2.05	U	ND< 1.96	U	ND< 225	U	ND< 2.30	U	ND< 162	U	ND< 2.05	U	ND< 2.36	U	ND< 1.91	U	ND< 2.24	U
1,2-Dichloropropane		ND< 2.22	U	ND< 2.22	U	ND< 2.27	U	ND< 2.05	U	ND< 1.96	U	ND< 225	U	ND< 2.30	U	ND< 162	U	ND< 2.05	U	ND< 2.36	U	ND< 1.91	U	ND< 2.24	U
1,3,5-Trimethylbenzene (Mesitylene)	52000	ND< 2.22	U	ND< 2.22	U	ND< 2.27	U	ND< 2.05	U	ND< 1.96	U	ND< 225	U	ND< 2.30	U	ND< 162	U	ND< 2.05	U	ND< 2.36	U	ND< 1.91	U	ND< 2.24	U
1,3-Dichlorobenzene	49000	ND< 2.22	U	ND< 2.22	U	ND< 2.27	U	ND< 2.05	U	ND< 1.96	U	ND< 225	U	ND< 2.30	U	ND< 162	U	ND< 2.05	U	ND< 2.36	U	ND< 1.91	U	ND< 2.24	U
1,4-Dichlorobenzene	13000	ND< 2.22	U	ND< 2.22	U	ND< 2.27	U	ND< 2.05	U	ND< 1.96	U	ND< 225	U	ND< 2.30	U	ND< 162	U	ND< 2.05	U	ND< 2.36	U	ND< 1.91	U	ND< 2.24	U
1,4-Dioxane (P-Dioxane)	13000	ND< 22.2	U	ND< 22.2	U	ND< 22.7	U	ND< 20.5	U	ND< 19.6	U	ND< 2250	U	ND< 23.0	U	ND< 1620	U	ND< 20.5	U	ND< 23.6	U	ND< 19.1	U	ND< 22.4	U
2-Hexanone		ND< 5.55	U	ND< 5.54	U	ND< 5.68	U	ND< 5.12	U	ND< 4.90	U	ND< 562	U	ND< 5.75	U	ND< 406	U	ND< 5.13	U	ND< 5.90	U	ND< 4.78	U	ND< 5.59	U
Acetone	100000	ND< 11.1	U	49.4		37.7		39.6		21.9		ND< 1120	U	ND< 11.5	U	ND< 812	U	ND< 10.3	U	ND< 11.8	U	ND< 9.56	U	30.1	
Benzene	4800	ND< 2.22	U	2.12		1.22		ND< 2.05	U	ND< 1.96	U	ND< 225	U	ND< 2.30	U	ND< 162	U	ND< 2.05	U	ND< 2.36	U	ND< 1.91	U	ND< 2.24	U
Bromochloromethane		ND< 5.55	U	ND< 5.54	U	ND< 5.68	U	ND< 5.12	U	ND< 4.90	U	ND< 562	U	ND< 5.75	U	ND< 406	U	ND< 5.13	U	ND< 5.90	U	ND< 4.78	U	ND< 5.59	U
Bromodichloromethane		ND< 2.22	U	ND< 2.22	U	ND< 2.27	U	ND< 2.05	U	ND< 1.96	U	ND< 225	U	ND< 2.30	U	ND< 162	U	ND< 2.05	U	ND< 2.36	U	ND< 1.91	U	ND< 2.24	U
Bromoform		ND< 5.55	U	ND< 5.54	U	ND< 5.68	U	ND< 5.12	U	ND< 4.90	U	ND< 562	U	ND< 5.75	U	ND< 406	U	ND< 5.13	U	ND< 5.90	U	ND< 4.78	U	ND< 5.59	U
Bromomethane		ND< 2.22	U	ND< 2.22	U	ND< 2.27	U	ND< 2.05	U	ND< 1.96	U	ND< 225	U	ND< 2.30	U	ND< 162	U	ND< 2.05	U	ND< 2.36	U	ND< 1.91	U	ND< 2.24	U
Carbon Disulfide		ND< 2.22	U	2.72		2.36		1.87		1.55		ND< 225	U	ND< 2.30	U	ND< 162	U	ND< 2.05	U	ND< 2.36	U	ND< 1.91	U	ND< 2.24	U
Carbon Tetrachloride	2400	ND< 2.22	U	ND< 2.22	U	ND< 2.27	U	ND< 2.05	U	ND< 1.96	U	ND< 225	U	ND< 2.30	U	ND< 162	U	ND< 2.05	U	ND< 2.36	U	ND< 1.91	U	ND< 2.24	U
Chlorobenzene	100000	ND< 2.22	U	ND< 2.22	U	ND< 2.27	U	ND< 2.05	U	ND< 1.96	U	ND< 225	U	ND< 2.30	U	ND< 162	U	ND< 2.05	U	ND< 2.36	U	ND< 1.91	U	ND< 2.24	U
Chloroethane		ND< 2.22	U	ND< 2.22	U	ND< 2.27	U	ND< 2.05	U	ND< 1.96	U	ND< 225	U	ND< 2.30	U	ND< 162	U	ND< 2.05	U	ND< 2.36	U	ND< 1.91	U	ND< 2.24	U
Chloroform	49000	ND< 2.22	U	ND< 2.22	U	ND< 2.27	U	ND< 2.05	U	ND< 1.96	U	ND< 225	U	ND< 2.30	U	ND< 162	U	ND< 2.05	U	ND< 2.36	U	ND< 1.91	U	ND< 2.24	U
Chloromethane		ND< 2.22	U	1.39		ND< 2.27	U	ND< 2.05	U	ND< 1.96	U	ND< 225	U	ND< 2.30	U	ND< 162	U	ND< 2.05	U	ND< 2.36	U	ND< 1.91	U	ND< 2.24	U
Cis-1,2-Dichloroethylene	100000	ND< 2.22	U	ND< 2.22	U	ND< 2.27	U	ND< 2.05	U	ND< 1.96	U	ND< 225	U	ND< 2.30	U	ND< 162	U	ND< 2.05	U	ND< 2.36	U	ND< 1.91	U	ND< 2.24	U
Cis-1,3-Dichloropropene		ND< 2.22	U	ND< 2.22	U	ND< 2.27	U	ND< 2.05	U	ND< 1.96	U	ND< 225	U	ND< 2.30	U	ND< 162	U	ND< 2.05	U	ND< 2.36	U	ND< 1.91	U	ND< 2.24	U
Cyclohexane		ND< 11.1	U	ND< 11.1	U	ND< 11.4	U	ND< 10.2	U	ND< 9.80	U	ND< 1120	U	ND< 11.5	U	ND< 812	U	ND< 10.3	U	ND< 11.8	U	ND< 9.56	U	ND< 11.2	U
Cymene		ND< 2.22	U	ND< 2.22	U	ND< 2.27	U	ND< 2.05	U	ND< 1.96	U	ND< 225	U	ND< 2.30	U	ND< 162	U	ND< 2.05	U	ND< 2.36	U	ND< 1.91	U	ND< 2.24	U
Dibromochloromethane		ND< 2.22	U	ND< 2.22	U	ND< 2.27	U	ND< 2.05	U	ND< 1.96	U	ND< 225	U	ND< 2.30	U	ND< 162	U	ND< 2.05	U	ND< 2.36	U	ND< 1.91	U	ND< 2.24	U
Dichlorodifluoromethane		ND< 2.22	U	ND< 2.22	U	ND< 2.27	U	ND< 2.05	U	ND< 1.96	U	ND< 225	U	ND< 2.30	U	ND< 162	U	ND< 2.05	U	ND< 2.36	U	ND< 1.91	U	ND< 2.24	U
Ethylbenzene	41000	ND< 2.22	U	ND< 2.22	U	ND< 2.27	U	ND< 2.05	U	ND< 1.96	U	ND< 225	U	ND< 2.30	U	ND< 162	U	ND< 2.05	U	ND< 2.36	U	ND< 1.91	U	ND< 2.24	U
Isopropylbenzene (Cumene)		ND< 2.22	U	ND< 2.22	U	ND< 2.27	U	ND< 2.05	U	ND< 1.96	U	ND< 225	U	ND< 2.30	U	ND< 162	U	ND< 2.05	U	ND< 2.36	U	ND< 1.91	U	ND< 2.24	U
Methyl Acetate		ND< 2.22	U	274	E	2.39		1.38		5.57		ND< 225	U	ND< 2.30	U	ND< 162	U	ND< 2.05	U	ND< 2.36	U	ND< 1.91	U	3.72	
Methyl Ethyl Ketone (2-Butanone)	100000	ND< 11.1	U	6.79		ND< 11.4	U	ND< 10.2	U	ND< 9.80	U	ND< 1120	U	ND< 11.5	U	ND< 812	U	ND< 10.3	U	ND< 11.8	U	ND< 9.56	U	ND< 11.2	U
Methyl Isobutyl Ketone (4-Methyl-2-Pentanone)		ND< 5.55	U	ND< 5.54	U	ND< 5.68	U	ND< 5.12	U	ND< 4.90	U	ND< 562	U	ND< 5.75	U	ND< 406	U	ND< 5.13	U	ND< 5.90	U	ND< 4.78	U	ND< 5.59	U
Methyl Tert-Butyl Ether (MTBE)	100000	ND< 2.22	U	ND< 2.22	U	ND< 2.27	U	ND< 2.05	U	ND< 1.96	U	ND< 225	U	ND< 2.30	U	ND< 162	U	ND< 2.05	U	ND< 2.36	U	ND< 1.91	U	ND< 2.24	U
Methylcyclohexane		ND< 2.22	U	ND< 2.22	U	2.48		ND< 2.05	U	ND< 1.96	U	ND< 225	U	ND< 2.30	U	ND< 162	U	ND< 2.05	U	ND< 2.36	U	ND< 1.91	U	ND< 2.24	U
Methylene Chloride	100000	ND< 5.55	U	ND< 5.54	U	ND< 5.68	U	ND< 5.12	U	ND< 4.90	U	ND< 562	U	ND< 5.75	U	ND< 406	U	ND< 5.13	U	ND< 5.90	U	ND< 4.78	U	ND< 5.59	U
M-P-Xylene		ND< 2.22	U	ND< 2.22	U	ND< 2.27	U	ND< 2.05	U	ND< 1.96	U	ND< 225	U	ND< 2.30	U	ND< 162	U	ND< 2.05	U	ND< 2.36	U	ND< 1.91	U	ND< 2.24	U
Naphthalene	100000	ND< 5.55	U	ND< 5.54	U	ND< 5.68	U	ND< 5.12	U	ND< 4.90	U	18900		50.0	X	10500		4.83	J	ND< 5.90	U	3.30	J	ND< 5.59	U
N-Butylbenzene	100000	ND< 2.22	U	ND< 2.22	U	ND< 2.27	U	ND< 2.05	U	ND< 1.96	U	ND< 225	U	ND< 2.30	U	ND< 162	U	ND< 2.05	U	ND< 2.36	U	ND< 1.91	U	ND< 2.24	U
N-Propylbenzene	100000	ND< 2.22	U	ND< 2.22	U	ND< 2.27	U	ND< 2.05	U	ND< 1.96	U	ND< 225	U	ND< 2.30	U	ND< 162	U	ND< 2.05	U	ND< 2.36	U	ND< 1.91	U	ND< 2.24	U
O-Xylene (1,2-Dimethylbenzene)		ND< 2.22	U	ND< 2.22	U	ND< 2.27	U	ND< 2.05	U	ND< 1.96	U	ND< 225	U	ND< 2.30	U	ND< 162	U	ND< 2.05	U	ND< 2.36	U	ND< 1.91	U	ND< 2.24	U
Sec-Butylbenzene	100000	ND< 2.22	U	ND< 2.22	U	ND< 2.27	U	ND< 2.05	U	ND< 1.96	U	ND< 225	U	ND< 2.30	U	ND< 162	U	ND< 2.05	U	ND< 2.36	U	ND< 1.91	U	ND< 2.24	U
Styrene		ND< 5.55	U	ND< 5.54	U	ND< 5.68	U	ND< 5.12	U	ND< 4.90	U	ND< 562	U	ND< 5.75	U	ND< 406	U	ND< 5.13	U	ND< 5.90	U	ND< 4.78	U	ND< 5.59	U
T-Butylbenzene	100000	ND< 2.22	U	ND< 2.22	U	ND< 2.27	U	ND< 2.05	U	ND< 1.96	U	ND< 225	U	ND< 2.30	U	ND< 162	U	ND< 2.05	U	ND< 2.36	U	ND< 1.91	U	ND< 2.24	U
Tetrachloroethylene (PCE)	19000	ND< 2.22	U	ND< 2.22	U	ND< 2.27	U	ND< 2.05	U	ND< 1.96	U	ND< 225	U	ND< 2.30	U	ND< 162	U	ND< 2.05	U	ND< 2.36	U	ND< 1.91	U	ND< 2.24	U
Toluene	100000	ND< 2.22	U	2.98		1.82		ND< 2.05	U	ND< 1.96	U	ND< 225	U	ND< 2.30	U	ND< 162	U	ND< 2.05	U	ND< 2.36	U	ND< 1.91	U	ND< 2.24	U
Trans-1,2-Dichloroethene	100000	ND< 2.22	U	ND< 2.22	U	ND< 2.27	U	ND< 2.05	U	ND< 1.96	U	ND< 225	U	ND< 2.30	U	ND< 162	U	ND< 2.05	U	ND< 2.36	U	ND< 1.91	U	ND< 2.24	U
Trans-1,3-Dichloropropene		ND< 2.22	U	ND< 2.22	U	ND< 2.27	U	ND< 2.05	U	ND< 1.96	U	ND< 225	U	ND< 2.30	U	ND< 162	U	ND< 2.05	U	ND< 2.36	U	ND< 1.91	U	ND< 2.24	U
Trichloroethylene (TCE)	21000	ND< 2.22	U	ND< 2.22	U	ND< 2.27	U	ND< 2.05	U	ND< 1.96	U	ND< 225	U	ND< 2.30	U	ND< 162	U	ND< 2.05	U	ND< 2.36	U	ND< 1.91	U	ND< 2.24	U
Trichlorofluoromethane		ND< 2.22	U	ND< 2.22	U	ND< 2.27	U	ND< 2.05	U	ND< 1.96	U	ND< 225	U	ND< 2.30	U	ND< 162	U	ND< 2.05	U	ND< 2.36	U	ND< 1.91	U	ND< 2.24	U
Vinyl Chloride	900	ND< 2.22	U	ND< 2.22	U	ND< 2.27	U	ND< 2.05	U	ND< 1.96	U	ND< 225	U	ND< 2.30	U	ND< 162	U	ND< 2.05	U	ND< 2.36	U	ND< 1.91	U	ND< 2.24	U

NOTES:

1. Soil sample analytical results are compared to the New York State Department of Environmental Conservation (NYSDEC) Title 6 of the official compilation of New York Codes, Rules, and Regulations (NYCRR) Part 375 Restricted Residential Soil Cleanup Objectives (RRSCOs).
2. RRSCO exceedances are in bold and highlighted yellow.
3. ND = Not Detected
4. Results shown as "ND" with Reporting Limits exceeding RRSCOs are in bold.
5. VOCs = Volatile Organic Compounds
6. µg/kg = micrograms per kilogram.
7. Qualifier (Q) definitions are provided in the official lab reports.

TABLE 1A: Volatile Organic Compounds (VOCs) in Soil
AOC-1 - Power House and Former Coal Storage Area
Soil Sample Results (non-QA/QC)
Hudson River Psychiatric Center - North BCP Site, Poughkeepsie, NY
PVE Sheffler File #560909

	Date Sampled	5/8/2014		5/8/2014		5/7/2014		7/15/2014		7/15/2014		7/15/2014		5/7/2014		5/12/2014		5/12/2014		5/7/2014		5/12/2014		7/15/2014	
	Location	PH-9		PH-9		PH-10		PH-10		PH-10		PH-10		PH-11		PH-11		PH-11		PH-12		PH-12		PH-14	
	Sample ID	PH-9 1-2'		PH-9 7-9'		PH-10 0-2"		PH-10 0-2"		PH-10 1-2'		PH-10 12.5-14'		PH-11 0-2"		PH-11 1-2'		PH-11 9-10.75'		PH-12 0-2"		PH-12 1-2'		PH-14 0-2"	
Analyte	RRSCOs	Result	Q	Result	Q	Result	Q	Result	Q	Result	Q	Result	Q	Result	Q	Result	Q	Result	Q	Result	Q	Result	Q	Result	Q
VOCs (µg/kg)																									
1,1,1-Trichloroethane	100000	ND< 2.30	U	ND< 1.96	U	ND< 1.89	U	ND< 2.17	U	ND< 2.00	U	ND< 1.90	U	ND< 2.13	U	ND< 2.00	U	ND< 1.90	U	ND< 1.79	U	ND< 2.57	U	ND< 2.37	U
1,1,2,2-Tetrachloroethane		ND< 2.30	U	ND< 1.96	U	ND< 1.89	U	ND< 2.17	U	ND< 2.00	U	ND< 1.90	U	ND< 2.13	U	ND< 2.00	U	ND< 1.90	U	ND< 1.79	U	ND< 2.57	U	ND< 2.37	U
1,1,2-Trichloro-1,2,2-Trifluoroethane		ND< 2.30	U	ND< 1.96	U	ND< 1.89	U	ND< 2.17	U	ND< 2.00	U	ND< 1.90	U	ND< 2.13	U	ND< 2.00	U	ND< 1.90	U	ND< 1.79	U	ND< 2.57	U	ND< 2.37	U
1,1,2-Trichloroethane		ND< 2.30	U	ND< 1.96	U	ND< 1.89	U	ND< 2.17	U	ND< 2.00	U	ND< 1.90	U	ND< 2.13	U	ND< 2.00	U	ND< 1.90	U	ND< 1.79	U	ND< 2.57	U	ND< 2.37	U
1,1-Dichloroethane	26000	ND< 2.30	U	ND< 1.96	U	ND< 1.89	U	ND< 2.17	U	ND< 2.00	U	ND< 1.90	U	ND< 2.13	U	ND< 2.00	U	ND< 1.90	U	ND< 1.79	U	ND< 2.57	U	ND< 2.37	U
1,1-Dichloroethene	100000	ND< 2.30	U	ND< 1.96	U	ND< 1.89	U	ND< 2.17	U	ND< 2.00	U	ND< 1.90	U	ND< 2.13	U	ND< 2.00	U	ND< 1.90	U	ND< 1.79	U	ND< 2.57	U	ND< 2.37	U
1,2,3-Trichlorobenzene		ND< 5.76	U	ND< 4.90	U	ND< 4.73	U	ND< 5.42	U	ND< 5.01	U	ND< 4.75	U	ND< 5.34	U	ND< 4.99	U	ND< 4.74	U	ND< 4.47	U	ND< 6.43	U	ND< 5.94	U
1,2,4-Trichlorobenzene		ND< 5.76	U	ND< 4.90	U	ND< 4.73	U	ND< 5.42	U	ND< 5.01	U	ND< 4.75	U	ND< 5.34	U	ND< 4.99	U	ND< 4.74	U	ND< 4.47	U	ND< 6.43	U	ND< 5.94	U
1,2,4-Trimethylbenzene	52000	ND< 2.30	U	ND< 1.96	U	ND< 1.89	U	ND< 2.17	U	ND< 2.00	U	ND< 1.90	U	ND< 2.13	U	ND< 2.00	U	19.0		ND< 1.79	U	ND< 2.57	U	ND< 2.37	U
1,2-Dibromo-3-Chloropropane		ND< 11.5	U	ND< 9.80	U	ND< 9.45	U	ND< 10.8	U	ND< 10.0	U	ND< 9.49	U	ND< 10.7	U	ND< 9.98	U	ND< 9.48	U	ND< 8.93	U	ND< 12.9	U	ND< 11.9	U
1,2-Dibromoethane (Ethylene Dibromide)		ND< 2.30	U	ND< 1.96	U	ND< 1.89	U	ND< 2.17	U	ND< 2.00	U	ND< 1.90	U	ND< 2.13	U	ND< 2.00	U	ND< 1.90	U	ND< 1.79	U	ND< 2.57	U	ND< 2.37	U
1,2-Dichlorobenzene	100000	ND< 2.30	U	ND< 1.96	U	ND< 1.89	U	ND< 2.17	U	ND< 2.00	U	ND< 1.90	U	ND< 2.13	U	ND< 2.00	U	ND< 1.90	U	ND< 1.79	U	ND< 2.57	U	ND< 2.37	U
1,2-Dichloroethane	3100	ND< 2.30	U	ND< 1.96	U	ND< 1.89	U	ND< 2.17	U	ND< 2.00	U	ND< 1.90	U	ND< 2.13	U	ND< 2.00	U	ND< 1.90	U	ND< 1.79	U	ND< 2.57	U	ND< 2.37	U
1,2-Dichloropropane		ND< 2.30	U	ND< 1.96	U	ND< 1.89	U	ND< 2.17	U	ND< 2.00	U	ND< 1.90	U	ND< 2.13	U	ND< 2.00	U	ND< 1.90	U	ND< 1.79	U	ND< 2.57	U	ND< 2.37	U
1,3,5-Trimethylbenzene (Mesitylene)	52000	ND< 2.30	U	ND< 1.96	U	ND< 1.89	U	ND< 2.17	U	ND< 2.00	U	ND< 1.90	U	ND< 2.13	U	ND< 2.00	U	3.22		ND< 1.79	U	ND< 2.57	U	ND< 2.37	U
1,3-Dichlorobenzene	49000	ND< 2.30	U	ND< 1.96	U	ND< 1.89	U	ND< 2.17	U	ND< 2.00	U	ND< 1.90	U	ND< 2.13	U	ND< 2.00	U	ND< 1.90	U	ND< 1.79	U	ND< 2.57	U	ND< 2.37	U
1,4-Dichlorobenzene	13000	ND< 2.30	U	ND< 1.96	U	ND< 1.89	U	ND< 2.17	U	ND< 2.00	U	ND< 1.90	U	ND< 2.13	U	ND< 2.00	U	ND< 1.90	U	ND< 1.79	U	ND< 2.57	U	ND< 2.37	U
1,4-Dioxane (P-Dioxane)	13000	ND< 23.0	U	ND< 19.6	U	ND< 18.9	U	ND< 21.7	U	ND< 20.0	U	ND< 19.0	U	ND< 21.3	U	ND< 20.0	U	ND< 19.0	U	ND< 17.9	U	ND< 25.7	U	ND< 23.7	U
2-Hexanone		ND< 5.76	U	ND< 4.90	U	ND< 4.73	U	ND< 5.42	U	ND< 5.01	U	ND< 4.75	U	ND< 5.34	U	ND< 4.99	U	ND< 4.74	U	ND< 4.47	U	ND< 6.43	U	ND< 5.94	U
Acetone	100000	84.3		11.0		164		ND< 10.8	U	ND< 10.0	U	ND< 9.49	U	137		56.8		12.0		61.5		46.2		ND< 11.9	U
Benzene	4800	ND< 2.30	U	ND< 1.96	U	ND< 1.89	U	ND< 2.17	U	ND< 2.00	U	ND< 1.90	U	ND< 2.13	U	ND< 2.00	U	ND< 1.90	U	ND< 1.79	U	ND< 2.57	U	ND< 2.37	U
Bromochloromethane		ND< 5.76	U	ND< 4.90	U	ND< 4.73	U	ND< 5.42	U	ND< 5.01	U	ND< 4.75	U	ND< 5.34	U	ND< 4.99	U	ND< 4.74	U	ND< 4.47	U	ND< 6.43	U	ND< 5.94	U
Bromodichloromethane		ND< 2.30	U	ND< 1.96	U	ND< 1.89	U	ND< 2.17	U	ND< 2.00	U	ND< 1.90	U	ND< 2.13	U	ND< 2.00	U	ND< 1.90	U	ND< 1.79	U	ND< 2.57	U	ND< 2.37	U
Bromoform		ND< 5.76	U	ND< 4.90	U	ND< 4.73	U	ND< 5.42	U	ND< 5.01	U	ND< 4.75	U	ND< 5.34	U	ND< 4.99	U	ND< 4.74	U	ND< 4.47	U	ND< 6.43	U	ND< 5.94	U
Bromomethane		1.72		ND< 1.96	U	ND< 1.89	U	ND< 2.17	U	ND< 2.00	U	ND< 1.90	U	ND< 2.13	U	ND< 2.00	U	ND< 1.90	U	ND< 1.79	U	ND< 2.57	U	ND< 2.37	U
Carbon Disulfide		ND< 2.30	U	ND< 1.96	U	4.60		ND< 2.17	U	ND< 2.00	U	ND< 1.90	U	3.16		3.58		ND< 1.90	U	3.10		ND< 2.57	U	ND< 2.37	U
Carbon Tetrachloride	2400	ND< 2.30	U	ND< 1.96	U	ND< 1.89	U	ND< 2.17	U	ND< 2.00	U	ND< 1.90	U	ND< 2.13	U	ND< 2.00	U	ND< 1.90	U	ND< 1.79	U	ND< 2.57	U	ND< 2.37	U
Chlorobenzene	100000	ND< 2.30	U	ND< 1.96	U	ND< 1.89	U	ND< 2.17	U	ND< 2.00	U	ND< 1.90	U	ND< 2.13	U	ND< 2.00	U	ND< 1.90	U	ND< 1.79	U	ND< 2.57	U	ND< 2.37	U
Chloroethane		ND< 2.30	U	ND< 1.96	U	ND< 1.89	U	ND< 2.17	U	ND< 2.00	U	ND< 1.90	U	ND< 2.13	U	ND< 2.00	U	ND< 1.90	U	ND< 1.79	U	ND< 2.57	U	ND< 2.37	U
Chloroform	49000	ND< 2.30	U	ND< 1.96	U	ND< 1.89	U	ND< 2.17	U	ND< 2.00	U	ND< 1.90	U	ND< 2.13	U	ND< 2.00	U	ND< 1.90	U	ND< 1.79	U	ND< 2.57	U	ND< 2.37	U
Chloromethane		10.9		ND< 1.96	U	2.48		ND< 2.17	U	ND< 2.00	U	ND< 1.90	U	ND< 2.13	U	ND< 2.00	U	ND< 1.90	U	ND< 1.79	U	ND< 2.57	U	ND< 2.37	U
Cis-1,2-Dichloroethylene	100000	ND< 2.30	U	ND< 1.96	U	ND< 1.89	U	ND< 2.17	U	ND< 2.00	U	ND< 1.90	U	ND< 2.13	U	ND< 2.00	U	ND< 1.90	U	ND< 1.79	U	ND< 2.57	U	ND< 2.37	U
Cis-1,3-Dichloropropene		ND< 2.30	U	ND< 1.96	U	ND< 1.89	U	ND< 2.17	U	ND< 2.00	U	ND< 1.90	U	ND< 2.13	U	ND< 2.00	U	ND< 1.90	U	ND< 1.79	U	ND< 2.57	U	ND< 2.37	U
Cyclohexane		ND< 11.5	U	ND< 9.80	U	ND< 9.45	U	ND< 10.8	U	ND< 10.0	U	ND< 9.49	U	ND< 10.7	U	ND< 9.98	U	ND< 9.48	U	ND< 8.93	U	ND< 12.9	U	ND< 11.9	U
Cymene		ND< 2.30	U	ND< 1.96	U	ND< 1.89	U	ND< 2.17	U	ND< 2.00	U	ND< 1.90	U	ND< 2.13	U	ND< 2.00	U	10.2		ND< 1.79	U	ND< 2.57	U	ND< 2.37	U
Dibromochloromethane		ND< 2.30	U	ND< 1.96	U	ND< 1.89	U	ND< 2.17	U	ND< 2.00	U	ND< 1.90	U	ND< 2.13	U	ND< 2.00	U	ND< 1.90	U	ND< 1.79	U	ND< 2.57	U	ND< 2.37	U
Dichlorodifluoromethane		ND< 2.30	U	ND< 1.96	U	ND< 1.89	U	ND< 2.17	U	ND< 2.00	U	ND< 1.90	U	ND< 2.13	U	ND< 2.00	U	ND< 1.90	U	ND< 1.79	U	ND< 2.57	U	ND< 2.37	U
Ethylbenzene	41000	ND< 2.30	U	ND< 1.96	U	ND< 1.89	U	ND< 2.17	U	ND< 2.00	U	ND< 1.90	U	ND< 2.13	U	ND< 2.00	U	1.99		ND< 1.79	U	ND< 2.57	U	ND< 2.37	U
Isopropylbenzene (Cumene)		ND< 2.30	U	ND< 1.96	U	ND< 1.89	U	ND< 2.17	U	ND< 2.00	U	ND< 1.90	U	ND< 2.13	U	ND< 2.00	U	8.75		ND< 1.79	U	ND< 2.57	U	ND< 2.37	U
Methyl Acetate		682	E	ND< 1.96	U	609	E	1.77	J	ND< 2.00	U	ND< 1.90	U	3.23		302	E	6.51		1.56	J	1.48	J	9.40	
Methyl Ethyl Ketone (2-Butanone)	100000	9.99		ND< 9.80	U	13.2		ND< 10.8	U	ND< 10.0	U	ND< 9.49	U	12.1		7.67	J	ND< 9.48	U	7.05	J	ND< 12.9	U	ND< 11.9	U
Methyl Isobutyl Ketone (4-Methyl-2-Pentanone)		ND< 5.76	U	ND< 4.90	U	ND< 4.73	U	ND< 5.42	U	ND< 5.01	U	ND< 4.75	U	ND< 5.34	U	ND< 4.99	U	ND< 4.74	U	ND< 4.47	U	ND< 6.43	U	ND< 5.94	U
Methyl Tert-Butyl Ether (MTBE)	100000	ND< 2.30	U	ND< 1.96	U	ND< 1.89	U	ND< 2.17	U	ND< 2.00	U	ND< 1.90	U	ND< 2.13	U	ND< 2.00	U	ND< 1.90	U	ND< 1.79	U	ND< 2.57	U	ND< 2.37	U
Methylcyclohexane		ND< 2.30	U	ND< 1.96	U	ND< 1.89	U	ND< 2.17	U	ND< 2.00	U	ND< 1.90	U	ND< 2.13	U	ND< 2.00	U	5.11		ND< 1.79	U	2.42	J	ND< 2.37	U
Methylene Chloride	100000	ND< 5.76	U	ND< 4.90	U	ND< 4.73	U	ND< 5.42	U	ND< 5.01	U	ND< 4.75	U	ND< 5.34	U	ND< 4.99	U	ND< 4.74	U	ND< 4.47	U	ND< 6.43	U	ND< 5.94	U
M-P-Xylene		ND< 2.30	U	ND< 1.96	U	ND< 1.89	U	ND< 2.17	U	ND< 2.00	U	ND< 1.90	U	ND< 2.13	U	ND< 2.00	U	ND< 1.90	U	ND< 1.79	U	ND< 2.57	U	ND< 2.37	U
Naphthalene	100000	ND< 5.76	U	ND< 4.90	U	ND< 4.73	U	ND< 5.42	U	ND< 5.01	U	ND< 4.75	U	ND< 5.34	U	ND< 4.99	U	18.7		ND< 4.47	U	ND< 6.43	U	ND< 5.94	U
N-Butylbenzene	100000	ND< 2.30	U	ND< 1.96	U	ND< 1.89	U	ND< 2.17	U	ND< 2.00	U	ND< 1.90	U	ND< 2.13	U	ND< 2.00	U	ND< 1.90	U	ND< 1.79	U	ND< 2.57	U	ND< 2.37	U
N-Propylbenzene	100000	ND< 2.30	U	ND< 1.96	U	ND< 1.89	U	ND< 2.17	U	ND< 2.00	U	ND< 1.90	U	ND< 2.13	U	ND< 2.00	U	17.0		ND< 1.79	U	ND< 2.57	U	ND< 2.37	U
O-Xylene (1,2-Dimethylbenzene)		ND< 2.30	U	ND< 1.96	U	ND< 1.89	U	ND< 2.17	U	ND< 2.00	U	ND< 1.90	U	ND< 2.13	U	ND< 2.00	U	2.71		ND< 1.79	U	ND< 2.57	U	ND< 2.37	U
Sec-Butylbenzene	100000	ND< 2.30	U	ND< 1.96	U	ND< 1.89	U	ND< 2.17	U	ND< 2.00	U	ND< 1.90	U	ND< 2.13	U	ND< 2.00	U	26.8		ND< 1.79	U	ND< 2.57	U	ND< 2.37	U
Styrene		ND< 5.76	U	ND< 4.90	U	ND< 4.73	U	ND< 5.42	U	ND< 5.01	U	ND< 4.75	U	ND< 5.34	U	ND< 4.99	U	ND< 4.74	U	ND< 4.47	U	ND< 6.43	U	ND< 5.94	U
T-Butylbenzene	100000	ND< 2.30	U	ND< 1.96	U	ND< 1.89	U	ND< 2.17	U	ND< 2.00	U	ND< 1.90	U	ND< 2.13	U	ND< 2.00	U	ND< 1.90	U	ND< 1.79	U	ND< 2.57	U	ND< 2.37	U
Tetrachloroethylene (PCE)	19000	ND< 2.30	U	ND< 1.96	U	ND< 1.89	U	ND< 2.17	U	ND< 2.00	U	ND< 1.90	U	ND< 2.13	U	ND< 2.00	U	ND< 1.90	U	ND< 1.79	U	ND< 2.57	U	ND< 2.37	U
Toluene	100000	ND< 2.30	U	ND< 1.96	U	ND< 1.89	U	ND< 2.17	U	ND< 2.00	U	ND< 1.90	U	ND< 2.13	U	ND< 2.00	U	ND< 1.90	U	ND< 1.79	U	1.34	J	ND< 2.37	U
Trans-1,2-Dichloroethene	100000	ND< 2.30	U	ND< 1.96	U	ND< 1.89	U	ND< 2.17	U	ND< 2.00	U	ND< 1.90	U	ND< 2.13	U	ND< 2.00	U	ND< 1.90	U	ND< 1.79	U	ND< 2.57	U	ND< 2.37	U
Trans-1,3-Dichloropropene		ND< 2.30	U	ND< 1.96	U	ND< 1.89	U	ND< 2.17	U	ND< 2.00	U	ND< 1.90	U	ND< 2.13	U	ND< 2.00	U	ND< 1.90	U	ND< 1.79	U	ND< 2.57	U	ND< 2.37	U
Trichloroethylene (TCE)	21000	ND< 2.30	U	ND< 1.96	U	ND< 1.89	U	ND< 2.17	U	ND< 2.00	U	ND< 1.90	U	ND< 2.13	U	ND< 2.00	U	ND< 1.90	U	ND< 1.79	U	ND< 2.57	U	ND< 2.37	U
Trichlorofluoromethane		ND< 2.30	U	ND< 1.96	U	ND< 1.89	U	ND< 2.17	U	ND< 2.00	U	ND< 1.90	U	ND< 2.13	U	ND< 2.00	U	ND< 1.90	U	ND< 1.79	U	ND< 2.57	U	ND< 2.37	U
Vinyl Chloride	900	ND< 2.30	U	ND< 1.96	U	ND< 1.89	U	ND< 2.17	U	ND< 2.00	U	ND< 1.90	U	ND< 2.13	U	ND< 2.00	U	ND< 1.90	U	ND< 1.79	U	ND< 2.57	U	ND< 2.37	U

NOTES:

1. Soil sample analytical results are compared to the New York State Department of Environmental Conservation (NYSDEC) Title 6 of the official compilation of New York Codes, Rules, and Regulations (NYCRR) Part 375 Restricted Residential Soil Cleanup Objectives (RRSCOs).
2. RRSCO exceedances are in bold and highlighted yellow.
3. ND = Not Detected
4. Results shown as "ND" with Reporting Limits exceeding RRSCOs are in bold.
5. VOCs = Volatile Organic Compounds
6. µg/kg = micrograms per kilogram.
7. Qualifier (Q) definitions are provided in the official lab reports.

TABLE 1A: Volatile Organic Compounds (VOCs) in Soil
AOC-1 - Power House and Former Coal Storage Area
Soil Sample Results (non-QA/QC)
Hudson River Psychiatric Center - North BCP Site, Poughkeepsie, NY
PVE Sheffler File #560909

	Date Sampled	7/15/2014		7/15/2014		7/15/2014		7/15/2014		7/15/2014		7/15/2014		7/16/2014		7/16/2014		7/16/2014		7/16/2014		7/16/2014		7/16/2014		7/16/2014	
	Location	PH-14		PH-14		PH-15		PH-15		PH-15		PH-16		PH-16		PH-16		PH-17		PH-17		PH-17		PH-17		PH-18	
	Sample ID	PH-14 1-2'		PH-14 9-11		PH-15 0-2"		PH-15 1-2'		PH-15 10-12		PH-16 0-2"		PH-16 1-2'		PH-16 12-13'		PH-17 0-2"		PH-17 1-2'		PH-17 2-4'		PH-18 0-2"	
Analyte	RRSCOs	Result	Q	Result	Q	Result	Q	Result	Q	Result	Q	Result	Q	Result	Q	Result	Q	Result	Q	Result	Q	Result	Q	Result	Q	Result	Q
VOCs (µg/kg)																											
1,1,1-Trichloroethane	100000	ND< 1.86	U	ND< 2.02	U	ND< 2.05	U	ND< 2.12	U	ND< 1.88	U	ND< 1.93	U	ND< 1.90	U	ND< 1.70	U	ND< 1.89	U	ND< 1.84	U	ND< 1.64	U	ND< 2.01	U
1,1,2,2-Tetrachloroethane		ND< 1.86	U	ND< 2.02	U	ND< 2.05	U	ND< 2.12	U	ND< 1.88	U	ND< 1.93	U	ND< 1.90	U	ND< 1.70	U	ND< 1.89	U	ND< 1.84	U	ND< 1.64	U	ND< 2.01	U
1,1,2-Trichloro-1,2,2-Trifluoroethane		ND< 1.86	U	ND< 2.02	U	ND< 2.05	U	ND< 2.12	U	ND< 1.88	U	ND< 1.93	U	ND< 1.90	U	ND< 1.70	U	ND< 1.89	U	ND< 1.84	U	ND< 1.64	U	ND< 2.01	U
1,1,2-Trichloroethane		ND< 1.86	U	ND< 2.02	U	ND< 2.05	U	ND< 2.12	U	ND< 1.88	U	ND< 1.93	U	ND< 1.90	U	ND< 1.70	U	ND< 1.89	U	ND< 1.84	U	ND< 1.64	U	ND< 2.01	U
1,1-Dichloroethane	26000	ND< 1.86	U	ND< 2.02	U	ND< 2.05	U	ND< 2.12	U	ND< 1.88	U	ND< 1.93	U	ND< 1.90	U	ND< 1.70	U	ND< 1.89	U	ND< 1.84	U	ND< 1.64	U	ND< 2.01	U
1,1-Dichloroethene	100000	ND< 1.86	U	ND< 2.02	U	ND< 2.05	U	ND< 2.12	U	ND< 1.88	U	ND< 1.93	U	ND< 1.90	U	ND< 1.70	U	ND< 1.89	U	ND< 1.84	U	ND< 1.64	U	ND< 2.01	U
1,2,3-Trichlorobenzene		ND< 4.66	U	ND< 5.04	U	ND< 5.14	U	ND< 5.31	U	ND< 4.71	U	ND< 4.82	U	ND< 4.75	U	ND< 4.25	U	ND< 4.72	U	ND< 4.61	U	ND< 4.09	U	ND< 5.03	U
1,2,4-Trichlorobenzene		ND< 4.66	U	ND< 5.04	U	ND< 5.14	U	ND< 5.31	U	ND< 4.71	U	ND< 4.82	U	ND< 4.75	U	ND< 4.25	U	ND< 4.72	U	ND< 4.61	U	ND< 4.09	U	ND< 5.03	U
1,2,4-Trimethylbenzene	52000	ND< 1.86	U	ND< 2.02	U	ND< 2.05	U	ND< 2.12	U	ND< 1.88	U	ND< 1.93	U	ND< 1.90	U	ND< 1.70	U	ND< 1.89	U	ND< 1.84	U	ND< 1.64	U	ND< 2.01	U
1,2-Dibromo-3-Chloropropane		ND< 9.31	U	ND< 10.1	U	ND< 10.3	U	ND< 10.6	U	ND< 9.41	U	ND< 9.63	U	ND< 9.49	U	ND< 8.51	U	ND< 9.45	U	ND< 9.21	U	ND< 8.18	U	ND< 10.1	U
1,2-Dibromoethane (Ethylene Dibromide)		ND< 1.86	U	ND< 2.02	U	ND< 2.05	U	ND< 2.12	U	ND< 1.88	U	ND< 1.93	U	ND< 1.90	U	ND< 1.70	U	ND< 1.89	U	ND< 1.84	U	ND< 1.64	U	ND< 2.01	U
1,2-Dichlorobenzene	100000	ND< 1.86	U	ND< 2.02	U	ND< 2.05	U	ND< 2.12	U	ND< 1.88	U	ND< 1.93	U	ND< 1.90	U	ND< 1.70	U	ND< 1.89	U	ND< 1.84	U	ND< 1.64	U	ND< 2.01	U
1,2-Dichloroethane	3100	ND< 1.86	U	ND< 2.02	U	ND< 2.05	U	ND< 2.12	U	ND< 1.88	U	ND< 1.93	U	ND< 1.90	U	ND< 1.70	U	ND< 1.89	U	ND< 1.84	U	ND< 1.64	U	ND< 2.01	U
1,2-Dichloropropane		ND< 1.86	U	ND< 2.02	U	ND< 2.05	U	ND< 2.12	U	ND< 1.88	U	ND< 1.93	U	ND< 1.90	U	ND< 1.70	U	ND< 1.89	U	ND< 1.84	U	ND< 1.64	U	ND< 2.01	U
1,3,5-Trimethylbenzene (Mesitylene)	52000	ND< 1.86	U	ND< 2.02	U	ND< 2.05	U	ND< 2.12	U	ND< 1.88	U	ND< 1.93	U	ND< 1.90	U	ND< 1.70	U	ND< 1.89	U	ND< 1.84	U	ND< 1.64	U	ND< 2.01	U
1,3-Dichlorobenzene	49000	ND< 1.86	U	ND< 2.02	U	ND< 2.05	U	ND< 2.12	U	ND< 1.88	U	ND< 1.93	U	ND< 1.90	U	ND< 1.70	U	ND< 1.89	U	ND< 1.84	U	ND< 1.64	U	ND< 2.01	U
1,4-Dichlorobenzene	13000	ND< 1.86	U	ND< 2.02	U	ND< 2.05	U	ND< 2.12	U	ND< 1.88	U	ND< 1.93	U	ND< 1.90	U	ND< 1.70	U	ND< 1.89	U	ND< 1.84	U	ND< 1.64	U	ND< 2.01	U
1,4-Dioxane (P-Dioxane)	13000	ND< 18.6	U	ND< 20.2	U	ND< 20.5	U	ND< 21.2	U	ND< 18.8	U	ND< 19.3	U	ND< 19.0	U	ND< 17.0	U	ND< 18.9	U	ND< 18.4	U	ND< 16.4	U	ND< 20.1	U
2-Hexanone		ND< 4.66	U	ND< 5.04	U	ND< 5.14	U	ND< 5.31	U	ND< 4.71	U	ND< 4.82	U	ND< 4.75	U	ND< 4.25	U	ND< 4.72	U	ND< 4.61	U	ND< 4.09	U	ND< 5.03	U
Acetone	100000	ND< 9.31	U	ND< 10.1	U	ND< 10.3	U	ND< 10.6	U	ND< 9.41	U	ND< 9.63	U	ND< 9.49	U	ND< 8.51	U	12.6		ND< 9.21	U	ND< 8.18	U	ND< 10.1	U
Benzene	4800	ND< 1.86	U	ND< 2.02	U	ND< 2.05	U	ND< 2.12	U	ND< 1.88	U	ND< 1.93	U	ND< 1.90	U	ND< 1.70	U	ND< 1.89	U	ND< 1.84	U	ND< 1.64	U	ND< 2.01	U
Bromochloromethane		ND< 4.66	U	ND< 5.04	U	ND< 5.14	U	ND< 5.31	U	ND< 4.71	U	ND< 4.82	U	ND< 4.75	U	ND< 4.25	U	ND< 4.72	U	ND< 4.61	U	ND< 4.09	U	ND< 5.03	U
Bromodichloromethane		ND< 1.86	U	ND< 2.02	U	ND< 2.05	U	ND< 2.12	U	ND< 1.88	U	ND< 1.93	U	ND< 1.90	U	ND< 1.70	U	ND< 1.89	U	ND< 1.84	U	ND< 1.64	U	ND< 2.01	U
Bromoform		ND< 4.66	U	ND< 5.04	U	ND< 5.14	U	ND< 5.31	U	ND< 4.71	U	ND< 4.82	U	ND< 4.75	U	ND< 4.25	U	ND< 4.72	U	ND< 4.61	U	ND< 4.09	U	ND< 5.03	U
Bromomethane		ND< 1.86	U	ND< 2.02	U	ND< 2.05	U	ND< 2.12	U	ND< 1.88	U	ND< 1.93	U	ND< 1.90	U	ND< 1.70	U	ND< 1.89	U	ND< 1.84	U	ND< 1.64	U	ND< 2.01	U
Carbon Disulfide		ND< 1.86	U	ND< 2.02	U	ND< 2.05	U	1.52	J	ND< 1.88	U	ND< 1.93	U	ND< 1.90	U	ND< 1.70	U	ND< 1.89	U	ND< 1.84	U	ND< 1.64	U	ND< 2.01	U
Carbon Tetrachloride	2400	ND< 1.86	U	ND< 2.02	U	ND< 2.05	U	ND< 2.12	U	ND< 1.88	U	ND< 1.93	U	ND< 1.90	U	ND< 1.70	U	ND< 1.89	U	ND< 1.84	U	ND< 1.64	U	ND< 2.01	U
Chlorobenzene	100000	ND< 1.86	U	ND< 2.02	U	ND< 2.05	U	ND< 2.12	U	ND< 1.88	U	ND< 1.93	U	ND< 1.90	U	ND< 1.70	U	ND< 1.89	U	ND< 1.84	U	ND< 1.64	U	ND< 2.01	U
Chloroethane		ND< 1.86	U	ND< 2.02	U	ND< 2.05	U	ND< 2.12	U	ND< 1.88	U	ND< 1.93	U	ND< 1.90	U	ND< 1.70	U	ND< 1.89	U	ND< 1.84	U	ND< 1.64	U	ND< 2.01	U
Chloroform	49000	ND< 1.86	U	ND< 2.02	U	ND< 2.05	U	ND< 2.12	U	ND< 1.88	U	ND< 1.93	U	ND< 1.90	U	ND< 1.70	U	ND< 1.89	U	ND< 1.84	U	ND< 1.64	U	ND< 2.01	U
Chloromethane		ND< 1.86	U	ND< 2.02	U	ND< 2.05	U	ND< 2.12	U	ND< 1.88	U	ND< 1.93	U	ND< 1.90	U	ND< 1.70	U	ND< 1.89	U	ND< 1.84	U	ND< 1.64	U	ND< 2.01	U
Cis-1,2-Dichloroethylene	100000	ND< 1.86	U	ND< 2.02	U	ND< 2.05	U	ND< 2.12	U	ND< 1.88	U	ND< 1.93	U	ND< 1.90	U	ND< 1.70	U	ND< 1.89	U	ND< 1.84	U	ND< 1.64	U	ND< 2.01	U
Cis-1,3-Dichloropropene		ND< 1.86	U	ND< 2.02	U	ND< 2.05	U	ND< 2.12	U	ND< 1.88	U	ND< 1.93	U	ND< 1.90	U	ND< 1.70	U	ND< 1.89	U	ND< 1.84	U	ND< 1.64	U	ND< 2.01	U
Cyclohexane		ND< 9.31	U	ND< 10.1	U	ND< 10.3	U	ND< 10.6	U	ND< 9.41	U	ND< 9.63	U	ND< 9.49	U	ND< 8.51	U	ND< 9.45	U	ND< 9.21	U	ND< 8.18	U	ND< 10.1	U
Cymene		ND< 1.86	U	ND< 2.02	U	ND< 2.05	U	ND< 2.12	U	ND< 1.88	U	3.31		ND< 1.90	U	ND< 1.70	U	ND< 1.89	U	ND< 1.84	U	ND< 1.64	U	ND< 2.01	U
Dibromochloromethane		ND< 1.86	U	ND< 2.02	U	ND< 2.05	U	ND< 2.12	U	ND< 1.88	U	ND< 1.93	U	ND< 1.90	U	ND< 1.70	U	ND< 1.89	U	ND< 1.84	U	ND< 1.64	U	ND< 2.01	U
Dichlorodifluoromethane		ND< 1.86	U	ND< 2.02	U	ND< 2.05	U	ND< 2.12	U	ND< 1.88	U	ND< 1.93	U	ND< 1.90	U	ND< 1.70	U	ND< 1.89	U	ND< 1.84	U	ND< 1.64	U	ND< 2.01	U
Ethylbenzene	41000	ND< 1.86	U	ND< 2.02	U	ND< 2.05	U	ND< 2.12	U	ND< 1.88	U	ND< 1.93	U	ND< 1.90	U	ND< 1.70	U	ND< 1.89	U	ND< 1.84	U	ND< 1.64	U	ND< 2.01	U
Isopropylbenzene (Cumene)		ND< 1.86	U	ND< 2.02	U	ND< 2.05	U	ND< 2.12	U	ND< 1.88	U	ND< 1.93	U	ND< 1.90	U	ND< 1.70	U	ND< 1.89	U	ND< 1.84	U	ND< 1.64	U	ND< 2.01	U
Methyl Acetate		ND< 1.86	U	ND< 2.02	U	ND< 2.05	U	ND< 2.12	U	ND< 1.88	U	ND< 1.93	U	ND< 1.90	U	ND< 1.70	U	30.0		ND< 1.84	U	ND< 1.64	U	11.0	
Methyl Ethyl Ketone (2-Butanone)	100000	ND< 9.31	U	ND< 10.1	U	ND< 10.3	U	ND< 10.6	U	ND< 9.41	U	ND< 9.63	U	ND< 9.49	U	ND< 8.51	U	ND< 9.45	U	ND< 9.21	U	ND< 8.18	U	ND< 10.1	U
Methyl Isobutyl Ketone (4-Methyl-2-Pentanone)		ND< 4.66	U	ND< 5.04	U	ND< 5.14	U	ND< 5.31	U	ND< 4.71	U	ND< 4.82	U	ND< 4.75	U	ND< 4.25	U	ND< 4.72	U	ND< 4.61	U	ND< 4.09	U	ND< 5.03	U
Methyl Tert-Butyl Ether (MTBE)	100000	ND< 1.86	U	ND< 2.02	U	ND< 2.05	U	ND< 2.12	U	ND< 1.88	U	ND< 1.93	U	ND< 1.90	U	ND< 1.70	U	ND< 1.89	U	ND< 1.84	U	ND< 1.64	U	ND< 2.01	U
Methylcyclohexane		0.950	J	ND< 2.02	U	ND< 2.05	U	ND< 2.12	U	ND< 1.88	U	ND< 1.93	U	ND< 1.90	U	ND< 1.70	U	ND< 1.89	U	ND< 1.84	U	ND< 1.64	U	ND< 2.01	U
Methylene Chloride	100000	ND< 4.66	U	ND< 5.04	U	ND< 5.14	U	ND< 5.31	U	ND< 4.71	U	ND< 4.82	U	ND< 4.75	U	ND< 4.25	U	ND< 4.72	U	ND< 4.61	U	ND< 4.09	U	ND< 5.03	U
M-P-Xylene		ND< 1.86	U	ND< 2.02	U	ND< 2.05	U	ND< 2.12	U	ND< 1.88	U	ND< 1.93	U	ND< 1.90	U	ND< 1.70	U	ND< 1.89	U	ND< 1.84	U	ND< 1.64	U	ND< 2.01	U
Naphthalene	100000	ND< 4.66	U	ND< 5.04	U	ND< 5.14	U	ND< 5.31	U	ND< 4.71	U	ND< 4.82	U	ND< 4.75	U	ND< 4.25	U	ND< 4.72	U	ND< 4.61	U	ND< 4.09	U	ND< 5.03	U
N-Butylbenzene	100000	ND< 1.86	U	ND< 2.02	U	ND< 2.05	U	ND< 2.12	U	ND< 1.88	U	ND< 1.93	U	ND< 1.90	U	ND< 1.70	U	ND< 1.89	U	ND< 1.84	U	ND< 1.64	U	ND< 2.01	U
N-Propylbenzene	100000	ND< 1.86	U	ND< 2.02	U	ND< 2.05	U	ND< 2.12	U	ND< 1.88	U	ND< 1.93	U	ND< 1.90	U	ND< 1.70	U	ND< 1.89	U	ND< 1.84	U	ND< 1.64	U	ND< 2.01	U
O-Xylene (1,2-Dimethylbenzene)		ND< 1.86	U	ND< 2.02	U	ND< 2.05	U	ND< 2.12	U	ND< 1.88	U	ND< 1.93	U	ND< 1.90	U	ND< 1.70	U	ND< 1.89	U	ND< 1.84	U	ND< 1.64	U	ND< 2.01	U
Sec-Butylbenzene	100000	ND< 1.86	U	ND< 2.02	U	ND< 2.05	U	ND< 2.12	U	ND< 1.88	U	ND< 1.93	U	ND< 1.90	U	ND< 1.70	U	ND< 1.89	U	ND< 1.84	U	ND< 1.64	U	ND< 2.01	U
Styrene		ND< 4.66	U	ND< 5.04	U	ND< 5.14	U	ND< 5.31	U	ND< 4.71	U	ND< 4.82	U	ND< 4.75	U	ND< 4.25	U	ND< 4.72	U	ND< 4.61	U	ND< 4.09	U	ND< 5.03	U
T-Butylbenzene	100000	ND< 1.86	U	ND< 2.02	U	ND< 2.05	U	ND< 2.12	U	ND< 1.88	U	ND< 1.93	U	ND< 1.90	U	ND< 1.70	U	ND< 1.89	U	ND< 1.84	U	ND< 1.64	U	ND< 2.01	U
Tetrachloroethylene (PCE)	19000	ND< 1.86	U	ND< 2.02	U	ND< 2.05	U	ND< 2.12	U	ND< 1.88	U	ND< 1.93	U	ND< 1.90	U	ND< 1.70	U	ND< 1.89	U	ND< 1.84	U	ND< 1.64	U	ND< 2.01	U
Toluene	100000	ND< 1.86	U	ND< 2.02	U	ND< 2.05	U	ND< 2.12	U	ND< 1.88	U	ND< 1.93	U	ND< 1.90	U	ND< 1.70	U	ND< 1.89	U	ND< 1.84	U	ND< 1.64	U	ND< 2.01	U
Trans-1,2-Dichloroethene	100000	ND< 1.86	U	ND< 2.02	U	ND< 2.05	U	ND< 2.12	U	ND< 1.88	U	ND< 1.93	U	ND< 1.90	U	ND< 1.70	U	ND< 1.89	U	ND< 1.84	U	ND< 1.64	U	ND< 2.01	U
Trans-1,3-Dichloropropene		ND< 1.86	U	ND< 2.02	U	ND< 2.05	U	ND< 2.12	U	ND< 1.88	U	ND< 1.93	U	ND< 1.90	U	ND< 1.70	U	ND< 1.89	U	ND< 1.84	U	ND< 1.64	U	ND< 2.01	U
Trichloroethylene (TCE)	21000	ND< 1.86	U	ND< 2.02	U	ND< 2.05	U	ND< 2.12	U	ND< 1.88	U	ND< 1.93	U	ND< 1.90	U	ND< 1.70	U	ND< 1.89	U	ND< 1.84	U	ND< 1.64	U	ND< 2.01	U
Trichlorofluoromethane		ND< 1.86	U	ND< 2.02	U	ND< 2.05	U	ND< 2.12	U	ND< 1.88	U	ND< 1.93	U	ND< 1.90	U	ND< 1.70	U	ND< 1.89	U	ND< 1.84	U	ND< 1.64	U	ND< 2.01	U
Vinyl Chloride	900	ND< 1.86	U	ND< 2.02	U	ND< 2.05	U	ND< 2.12	U	ND< 1.88	U	ND< 1.93	U	ND< 1.90	U	ND< 1.70	U	ND< 1.89	U	ND< 1.84	U	ND< 1.64	U	ND< 2.01	U

NOTES:

1. Soil sample analytical results are compared to the New York State Department of Environmental Conservation (NYSDEC) Title 6 of the official compilation of New York Codes, Rules, and Regulations (NYCRR) Part 375 Restricted Residential Soil Cleanup Objectives (RRSCOs).
2. RRSCO exceedances are in bold and highlighted yellow.
3. ND = Not Detected
4. Results shown as "ND" with Reporting Limits exceeding RRSCOs are in bold.
5. VOCs = Volatile Organic Compounds
6. µg/kg = micrograms per kilogram.
7. Qualifier (Q) definitions are provided in the official lab reports.

TABLE 1A: Volatile Organic Compounds (VOCs) in Soil
AOC-1 - Power House and Former Coal Storage Area
Soil Sample Results (non-QA/QC)
Hudson River Psychiatric Center - North BCP Site, Poughkeepsie, NY
PVE Sheffler File #560909

	Date Sampled	7/16/2014		7/16/2014		7/16/2014		7/16/2014		7/16/2014		7/17/2014		7/17/2014		7/17/2014		7/17/2014		7/17/2014		7/17/2014		12/18/2014	
	Location	PH-18		PH-18		PH-19		PH-19		PH-19		PH-20		PH-20		PH-20		PH-21		PH-21		PH-21		PH-22	
	Sample ID	PH-18 1-2'		PH-18 9-10.5		PH-19 0-2"		PH-19 1-2'		PH-19 12-13'		PH-20 0-2"		PH-20 1-2'		PH-20 7-9'		PH-21 0-2"		PH-21 1-2'		PH-21 18-19'		PH-22 2-4'	
Analyte	RRSCOs	Result	Q	Result	Q	Result	Q	Result	Q	Result	Q	Result	Q	Result	Q	Result	Q	Result	Q	Result	Q	Result	Q	Result	Q
VOCs (µg/kg)																									
1,1,1-Trichloroethane	100000	ND< 1.72	U	ND< 2.13	U	ND< 2.05	U	ND< 2.20	U	ND< 1.77	U	ND< 2.38	U	ND< 3.00	U	ND< 2.00	U	ND< 2.42	U	ND< 2.27	U	ND< 2.41	U	ND< 2.29	U
1,1,2,2-Tetrachloroethane		ND< 1.72	U	ND< 2.13	U	ND< 2.05	U	ND< 2.20	U	ND< 1.77	U	ND< 2.38	U	ND< 3.00	U	ND< 2.00	U	ND< 2.42	U	ND< 2.27	U	ND< 2.41	U	ND< 2.29	U
1,1,2-Trichloro-1,2,2-Trifluoroethane		ND< 1.72	U	ND< 2.13	U	ND< 2.05	U	ND< 2.20	U	ND< 1.77	U	ND< 2.38	U	ND< 3.00	U	ND< 2.00	U	ND< 2.42	U	ND< 2.27	U	ND< 2.41	U	ND< 2.29	U
1,1,2-Trichloroethane		ND< 1.72	U	ND< 2.13	U	ND< 2.05	U	ND< 2.20	U	ND< 1.77	U	ND< 2.38	U	ND< 3.00	U	ND< 2.00	U	ND< 2.42	U	ND< 2.27	U	ND< 2.41	U	ND< 2.29	U
1,1-Dichloroethane	26000	ND< 1.72	U	ND< 2.13	U	ND< 2.05	U	ND< 2.20	U	ND< 1.77	U	ND< 2.38	U	ND< 3.00	U	ND< 2.00	U	ND< 2.42	U	ND< 2.27	U	ND< 2.41	U	ND< 2.29	U
1,1-Dichloroethene	100000	ND< 1.72	U	ND< 2.13	U	ND< 2.05	U	ND< 2.20	U	ND< 1.77	U	ND< 2.38	U	ND< 3.00	U	ND< 2.00	U	ND< 2.42	U	ND< 2.27	U	ND< 2.41	U	ND< 2.29	U
1,2,3-Trichlorobenzene		ND< 4.31	U	ND< 5.33	U	ND< 5.13	U	ND< 5.50	U	ND< 4.43	U	ND< 5.96	U	ND< 7.50	U	ND< 5.00	U	ND< 6.04	U	ND< 5.67	U	ND< 6.02	U	ND< 5.73	U
1,2,4-Trichlorobenzene		ND< 4.31	U	ND< 5.33	U	ND< 5.13	U	ND< 5.50	U	ND< 4.43	U	ND< 5.96	U	ND< 7.50	U	ND< 5.00	U	ND< 6.04	U	ND< 5.67	U	ND< 6.02	U	ND< 5.73	U
1,2,4-Trimethylbenzene	52000	ND< 1.72	U	ND< 2.13	U	ND< 2.05	U	ND< 2.20	U	ND< 1.77	U	ND< 2.38	U	ND< 3.00	U	ND< 2.00	U	ND< 2.42	U	ND< 2.27	U	ND< 2.41	U	ND< 2.29	U
1,2-Dibromo-3-Chloropropane		ND< 8.62	U	ND< 10.7	U	ND< 10.3	U	ND< 11.0	U	ND< 8.86	U	ND< 11.9	U	ND< 15.0	U	ND< 10.0	U	ND< 12.1	U	ND< 11.3	U	ND< 12.0	U	ND< 11.5	U
1,2-Dibromoethane (Ethylene Dibromide)		ND< 1.72	U	ND< 2.13	U	ND< 2.05	U	ND< 2.20	U	ND< 1.77	U	ND< 2.38	U	ND< 3.00	U	ND< 2.00	U	ND< 2.42	U	ND< 2.27	U	ND< 2.41	U	ND< 2.29	U
1,2-Dichlorobenzene	100000	ND< 1.72	U	ND< 2.13	U	ND< 2.05	U	ND< 2.20	U	ND< 1.77	U	ND< 2.38	U	ND< 3.00	U	ND< 2.00	U	ND< 2.42	U	ND< 2.27	U	ND< 2.41	U	ND< 2.29	U
1,2-Dichloroethane	3100	ND< 1.72	U	ND< 2.13	U	ND< 2.05	U	ND< 2.20	U	ND< 1.77	U	ND< 2.38	U	ND< 3.00	U	ND< 2.00	U	ND< 2.42	U	ND< 2.27	U	ND< 2.41	U	ND< 2.29	U
1,2-Dichloropropane		ND< 1.72	U	ND< 2.13	U	ND< 2.05	U	ND< 2.20	U	ND< 1.77	U	ND< 2.38	U	ND< 3.00	U	ND< 2.00	U	ND< 2.42	U	ND< 2.27	U	ND< 2.41	U	ND< 2.29	U
1,3,5-Trimethylbenzene (Mesitylene)	52000	ND< 1.72	U	ND< 2.13	U	ND< 2.05	U	ND< 2.20	U	ND< 1.77	U	ND< 2.38	U	ND< 3.00	U	ND< 2.00	U	ND< 2.42	U	ND< 2.27	U	ND< 2.41	U	ND< 2.29	U
1,3-Dichlorobenzene	49000	ND< 1.72	U	ND< 2.13	U	ND< 2.05	U	ND< 2.20	U	ND< 1.77	U	ND< 2.38	U	ND< 3.00	U	ND< 2.00	U	ND< 2.42	U	ND< 2.27	U	ND< 2.41	U	ND< 2.29	U
1,4-Dichlorobenzene	13000	ND< 1.72	U	ND< 2.13	U	ND< 2.05	U	ND< 2.20	U	ND< 1.77	U	ND< 2.38	U	ND< 3.00	U	ND< 2.00	U	ND< 2.42	U	ND< 2.27	U	ND< 2.41	U	ND< 2.29	U
1,4-Dioxane (P-Dioxane)	13000	ND< 17.2	U	ND< 21.3	U	ND< 20.5	U	ND< 22.0	U	ND< 17.7	U	ND< 23.8	U	ND< 30.0	U	ND< 20.0	U	ND< 24.2	U	ND< 22.7	U	ND< 24.1	U	ND< 22.9	U
2-Hexanone		ND< 4.31	U	ND< 5.33	U	ND< 5.13	U	ND< 5.50	U	ND< 4.43	U	ND< 5.96	U	ND< 7.50	U	ND< 5.00	U	ND< 6.04	U	ND< 5.67	U	ND< 6.02	U	ND< 5.73	U
Acetone	100000	ND< 8.62	U	ND< 10.7	U	6.49	J	ND< 11.0	U	ND< 8.86	U	ND< 11.9	U	ND< 15.0	U	ND< 10.0	U	ND< 12.1	U	ND< 11.3	U	ND< 12.0	U	ND< 11.5	U
Benzene	4800	ND< 1.72	U	ND< 2.13	U	ND< 2.05	U	ND< 2.20	U	ND< 1.77	U	ND< 2.38	U	ND< 3.00	U	ND< 2.00	U	ND< 2.42	U	ND< 2.27	U	ND< 2.41	U	ND< 2.29	U
Bromochloromethane		ND< 4.31	U	ND< 5.33	U	ND< 5.13	U	ND< 5.50	U	ND< 4.43	U	ND< 5.96	U	ND< 7.50	U	ND< 5.00	U	ND< 6.04	U	ND< 5.67	U	ND< 6.02	U	ND< 5.73	U
Bromodichloromethane		ND< 1.72	U	ND< 2.13	U	ND< 2.05	U	ND< 2.20	U	ND< 1.77	U	ND< 2.38	U	ND< 3.00	U	ND< 2.00	U	ND< 2.42	U	ND< 2.27	U	ND< 2.41	U	ND< 2.29	U
Bromoform		ND< 4.31	U	ND< 5.33	U	ND< 5.13	U	ND< 5.50	U	ND< 4.43	U	ND< 5.96	U	ND< 7.50	U	ND< 5.00	U	ND< 6.04	U	ND< 5.67	U	ND< 6.02	U	ND< 5.73	U
Bromomethane		ND< 1.72	U	ND< 2.13	U	ND< 2.05	U	ND< 2.20	U	ND< 1.77	U	ND< 2.38	U	ND< 3.00	U	ND< 2.00	U	ND< 2.42	U	ND< 2.27	U	ND< 2.41	U	ND< 2.29	U
Carbon Disulfide		ND< 1.72	U	ND< 2.13	U	ND< 2.05	U	ND< 2.20	U	ND< 1.77	U	ND< 2.38	U	4.27		ND< 2.00	U	ND< 2.42	U	ND< 2.27	U	ND< 2.41	U	ND< 2.29	U
Carbon Tetrachloride	2400	ND< 1.72	U	ND< 2.13	U	ND< 2.05	U	ND< 2.20	U	ND< 1.77	U	ND< 2.38	U	ND< 3.00	U	ND< 2.00	U	ND< 2.42	U	ND< 2.27	U	ND< 2.41	U	ND< 2.29	U
Chlorobenzene	100000	ND< 1.72	U	ND< 2.13	U	ND< 2.05	U	ND< 2.20	U	ND< 1.77	U	ND< 2.38	U	ND< 3.00	U	ND< 2.00	U	ND< 2.42	U	ND< 2.27	U	ND< 2.41	U	ND< 2.29	U
Chloroethane		ND< 1.72	U	ND< 2.13	U	ND< 2.05	U	ND< 2.20	U	ND< 1.77	U	ND< 2.38	U	ND< 3.00	U	ND< 2.00	U	ND< 2.42	U	ND< 2.27	U	ND< 2.41	U	ND< 2.29	U
Chloroform	49000	ND< 1.72	U	ND< 2.13	U	ND< 2.05	U	ND< 2.20	U	ND< 1.77	U	ND< 2.38	U	ND< 3.00	U	ND< 2.00	U	ND< 2.42	U	ND< 2.27	U	ND< 2.41	U	ND< 2.29	U
Chloromethane		ND< 1.72	U	ND< 2.13	U	ND< 2.05	U	ND< 2.20	U	ND< 1.77	U	ND< 2.38	U	ND< 3.00	U	ND< 2.00	U	ND< 2.42	U	ND< 2.27	U	ND< 2.41	U	ND< 2.29	U
Cis-1,2-Dichloroethylene	100000	ND< 1.72	U	ND< 2.13	U	ND< 2.05	U	ND< 2.20	U	ND< 1.77	U	ND< 2.38	U	ND< 3.00	U	ND< 2.00	U	ND< 2.42	U	ND< 2.27	U	ND< 2.41	U	ND< 2.29	U
Cis-1,3-Dichloropropene		ND< 1.72	U	ND< 2.13	U	ND< 2.05	U	ND< 2.20	U	ND< 1.77	U	ND< 2.38	U	ND< 3.00	U	ND< 2.00	U	ND< 2.42	U	ND< 2.27	U	ND< 2.41	U	ND< 2.29	U
Cyclohexane		ND< 8.62	U	ND< 10.7	U	ND< 10.3	U	ND< 11.0	U	ND< 8.86	U	ND< 11.9	U	ND< 15.0	U	ND< 10.0	U	ND< 12.1	U	ND< 11.3	U	ND< 12.0	U	ND< 11.5	U
Cymene		ND< 1.72	U	ND< 2.13	U	ND< 2.05	U	ND< 2.20	U	ND< 1.77	U	ND< 2.38	U	ND< 3.00	U	ND< 2.00	U	ND< 2.42	U	ND< 2.27	U	ND< 2.41	U	ND< 2.29	U
Dibromochloromethane		ND< 1.72	U	ND< 2.13	U	ND< 2.05	U	ND< 2.20	U	ND< 1.77	U	ND< 2.38	U	ND< 3.00	U	ND< 2.00	U	ND< 2.42	U	ND< 2.27	U	ND< 2.41	U	ND< 2.29	U
Dichlorodifluoromethane		ND< 1.72	U	ND< 2.13	U	ND< 2.05	U	ND< 2.20	U	ND< 1.77	U	ND< 2.38	U	ND< 3.00	U	ND< 2.00	U	ND< 2.42	U	ND< 2.27	U	ND< 2.41	U	ND< 2.29	U
Ethylbenzene	41000	ND< 1.72	U	ND< 2.13	U	ND< 2.05	U	ND< 2.20	U	ND< 1.77	U	ND< 2.38	U	ND< 3.00	U	ND< 2.00	U	ND< 2.42	U	ND< 2.27	U	ND< 2.41	U	ND< 2.29	U
Isopropylbenzene (Cumene)		ND< 1.72	U	ND< 2.13	U	ND< 2.05	U	ND< 2.20	U	ND< 1.77	U	ND< 2.38	U	ND< 3.00	U	ND< 2.00	U	ND< 2.42	U	ND< 2.27	U	ND< 2.41	U	ND< 2.29	U
Methyl Acetate		ND< 1.72	U	ND< 2.13	U	ND< 2.05	U	ND< 2.20	U	ND< 1.77	U	ND< 2.38	U	ND< 3.00	U	ND< 2.00	U	ND< 2.42	U	ND< 2.27	U	ND< 2.41	U	ND< 2.29	U
Methyl Ethyl Ketone (2-Butanone)	100000	ND< 8.62	U	ND< 10.7	U	ND< 10.3	U	ND< 11.0	U	ND< 8.86	U	ND< 11.9	U	ND< 15.0	U	ND< 10.0	U	ND< 12.1	U	ND< 11.3	U	ND< 12.0	U	ND< 11.5	U
Methyl Isobutyl Ketone (4-Methyl-2-Pentanone)		ND< 4.31	U	ND< 5.33	U	ND< 5.13	U	ND< 5.50	U	ND< 4.43	U	ND< 5.96	U	ND< 7.50	U	ND< 5.00	U	ND< 6.04	U	ND< 5.67	U	ND< 6.02	U	ND< 5.73	U
Methyl Tert-Butyl Ether (MTBE)	100000	ND< 1.72	U	ND< 2.13	U	ND< 2.05	U	ND< 2.20	U	ND< 1.77	U	ND< 2.38	U	ND< 3.00	U	ND< 2.00	U	ND< 2.42	U	ND< 2.27	U	ND< 2.41	U	ND< 2.29	U
Methylcyclohexane		ND< 1.72	U	ND< 2.13	U	ND< 2.05	U	ND< 2.20	U	ND< 1.77	U	ND< 2.38	U	ND< 3.00	U	ND< 2.00	U	ND< 2.42	U	ND< 2.27	U	ND< 2.41	U	ND< 2.29	U
Methylene Chloride	100000	ND< 4.31	U	ND< 5.33	U	ND< 5.13	U	ND< 5.50	U	ND< 4.43	U	ND< 5.96	U	ND< 7.50	U	ND< 5.00	U	ND< 6.04	U	ND< 5.67	U	ND< 6.02	U	ND< 5.73	U
M-P-Xylene		ND< 1.72	U	ND< 2.13	U	ND< 2.05	U	ND< 2.20	U	ND< 1.77	U	ND< 2.38	U	ND< 3.00	U	ND< 2.00	U	ND< 2.42	U	ND< 2.27	U	ND< 2.41	U	1.72	J
Naphthalene	100000	ND< 4.31	U	ND< 5.33	U	ND< 5.13	U	ND< 5.50	U	ND< 4.43	U	ND< 5.96	U	ND< 7.50	U	ND< 5.00	U	ND< 6.04	U	ND< 5.67	U	ND< 6.02	U	ND< 5.73	U
N-Butylbenzene	100000	ND< 1.72	U	ND< 2.13	U	ND< 2.05	U	ND< 2.20	U	ND< 1.77	U	ND< 2.38	U	ND< 3.00	U	ND< 2.00	U	ND< 2.42	U	ND< 2.27	U	ND< 2.41	U	ND< 2.29	U
N-Propylbenzene	100000	ND< 1.72	U	ND< 2.13	U	ND< 2.05	U	ND< 2.20	U	ND< 1.77	U	ND< 2.38	U	ND< 3.00	U	ND< 2.00	U	ND< 2.42	U	ND< 2.27	U	ND< 2.41	U	ND< 2.29	U
O-Xylene (1,2-Dimethylbenzene)		ND< 1.72	U	ND< 2.13	U	ND< 2.05	U	ND< 2.20	U	ND< 1.77	U	ND< 2.38	U	ND< 3.00	U	ND< 2.00	U	ND< 2.42	U	ND< 2.27	U	ND< 2.41	U	ND< 2.29	U
Sec-Butylbenzene	100000	ND< 1.72	U	ND< 2.13	U	ND< 2.05	U	ND< 2.20	U	ND< 1.77	U	ND< 2.38	U	ND< 3.00	U	ND< 2.00	U	ND< 2.42	U	ND< 2.27	U	ND< 2.41	U	ND< 2.29	U
Styrene		ND< 4.31	U	ND< 5.33	U	ND< 5.13	U	ND< 5.50	U	ND< 4.43	U	ND< 5.96	U	ND< 7.50	U	ND< 5.00	U	ND< 6.04	U	ND< 5.67	U	ND< 6.02	U	ND< 5.73	U
T-Butylbenzene	100000	ND< 1.72	U	ND< 2.13	U	ND< 2.05	U	ND< 2.20	U	ND< 1.77	U	ND< 2.38	U	ND< 3.00	U	ND< 2.00	U	ND< 2.42	U	ND< 2.27	U	ND< 2.41	U	ND< 2.29	U
Tetrachloroethylene (PCE)	19000	ND< 1.72	U	ND< 2.13	U	ND< 2.05	U	ND< 2.20	U	ND< 1.77	U	ND< 2.38	U	ND< 3.00	U	ND< 2.00	U	ND< 2.42	U	ND< 2.27	U	ND< 2.41	U	ND< 2.29	U
Toluene	100000	ND< 1.72	U	ND< 2.13	U	ND< 2.05	U	ND< 2.20	U	ND< 1.77	U	ND< 2.38	U	ND< 3.00	U	ND< 2.00	U	ND< 2.42	U	ND< 2.27	U	ND< 2.41	U	1.23	J
Trans-1,2-Dichloroethene	100000	ND< 1.72	U	ND< 2.13	U	ND< 2.05	U	ND< 2.20	U	ND< 1.77	U	ND< 2.38	U	ND< 3.00	U	ND< 2.00	U	ND< 2.42	U	ND< 2.27	U	ND< 2.41	U	ND< 2.29	U
Trans-1,3-Dichloropropene		ND< 1.72	U	ND< 2.13	U	ND< 2.05	U	ND< 2.20	U	ND< 1.77	U	ND< 2.38	U	ND< 3.00	U	ND< 2.00	U	ND< 2.42	U	ND< 2.27	U	ND< 2.41	U	ND< 2.29	U
Trichloroethylene (TCE)	21000	ND< 1.72	U	ND< 2.13	U	ND< 2.05	U	ND< 2.20	U	ND< 1.77	U	ND< 2.38	U	ND< 3.00	U	ND< 2.00	U	ND< 2.42	U	ND< 2.27	U	ND< 2.41	U	ND< 2.29	U
Trichlorofluoromethane		ND< 1.72	U	ND< 2.13	U	ND< 2.05	U	ND< 2.20	U	ND< 1.77	U	ND< 2.38	U	ND< 3.00	U	ND< 2.00	U	ND< 2.42	U	ND< 2.27	U	ND< 2.41	U	ND< 2.29	U
Vinyl Chloride	900	ND< 1.72	U	ND< 2.13	U	ND< 2.05	U	ND< 2.20	U	ND< 1.77	U	ND< 2.38	U	ND< 3.00	U	ND< 2.00	U	ND< 2.42	U	ND< 2.27	U	ND< 2.41	U	ND< 2.29	U

NOTES:

1. Soil sample analytical results are compared to the New York State Department of Environmental Conservation (NYSDEC) Title 6 of the official compilation of New York Codes, Rules, and Regulations (NYCRR) Part 375 Restricted Residential Soil Cleanup Objectives (RRSCOs).
2. RRSCO exceedances are in bold and highlighted yellow.
3. ND = Not Detected
4. Results shown as "ND" with Reporting Limits exceeding RRSCOs are in bold.
5. VOCs = Volatile Organic Compounds
6. µg/kg = micrograms per kilogram.
7. Qualifier (Q) definitions are provided in the official lab reports.

TABLE 1A: Volatile Organic Compounds (VOCs) in Soil
AOC-1 - Power House and Former Coal Storage Area
Soil Sample Results (non-QA/QC)
Hudson River Psychiatric Center - North BCP Site, Poughkeepsie, NY
PVE Sheffler File #560909

	Date Sampled	12/18/2014		12/18/2014		12/18/2014		12/18/2014		12/18/2014		5/7/2014		5/7/2014		5/7/2014		7/15/2014		7/15/2014		7/15/2014		5/6/2014	
	Location	PH-22		PH-23		PH-23		PH-24		PH-24		PH-SS-1		PH-SS-1		PH-SS-1		PH-SS-3		PH-SS-3		PH-SS-3		PH-SS-4	
	Sample ID	PH-22 12-14'		PH-23 2-5'		PH-23 8-10'		PH-24 2-5'		PH-24 16-18'		PH-SS-1 0-2"		PH-SS-1 1-2'		PH-SS-1 2-3'		PH-SS-3 0-2"		PH-SS-3 1-2"		PH-SS-3 2-3"		PH-SS-4 0-2"	
Analyte	RRSCOs	Result	Q	Result	Q	Result	Q	Result	Q	Result	Q	Result	Q	Result	Q	Result	Q	Result	Q	Result	Q	Result	Q	Result	Q
VOCs (µg/kg)																									
1,1,1-Trichloroethane	100000	ND< 2.09	U	ND< 2.27	U	ND< 1.66	U	ND< 3.11	U	ND< 1.96	U	ND< 2.32	U	ND< 1.93	U	ND< 1.91	U	ND< 2.32	U	ND< 2.41	U	ND< 1.81	U	ND< 2.61	U
1,1,2,2-Tetrachloroethane		ND< 2.09	U	ND< 2.27	U	ND< 1.66	U	ND< 3.11	U	ND< 1.96	U	ND< 2.32	U	ND< 1.93	U	ND< 1.91	U	ND< 2.32	U	ND< 2.41	U	ND< 1.81	U	ND< 2.61	U
1,1,2-Trichloro-1,2,2-Trifluoroethane		ND< 2.09	U	ND< 2.27	U	ND< 1.66	U	ND< 3.11	U	ND< 1.96	U	ND< 2.32	U	ND< 1.93	U	ND< 1.91	U	ND< 2.32	U	ND< 2.41	U	ND< 1.81	U	ND< 2.61	U
1,1,2-Trichloroethane		ND< 2.09	U	ND< 2.27	U	ND< 1.66	U	ND< 3.11	U	ND< 1.96	U	ND< 2.32	U	ND< 1.93	U	ND< 1.91	U	ND< 2.32	U	ND< 2.41	U	ND< 1.81	U	ND< 2.61	U
1,1-Dichloroethane	26000	ND< 2.09	U	ND< 2.27	U	ND< 1.66	U	ND< 3.11	U	ND< 1.96	U	ND< 2.32	U	ND< 1.93	U	ND< 1.91	U	ND< 2.32	U	ND< 2.41	U	ND< 1.81	U	ND< 2.61	U
1,1-Dichloroethene	100000	ND< 2.09	U	ND< 2.27	U	ND< 1.66	U	ND< 3.11	U	ND< 1.96	U	ND< 2.32	U	ND< 1.93	U	ND< 1.91	U	ND< 2.32	U	ND< 2.41	U	ND< 1.81	U	ND< 2.61	U
1,2,3-Trichlorobenzene		ND< 5.22	U	ND< 5.68	U	ND< 4.16	U	ND< 7.77	U	ND< 4.90	U	ND< 5.80	U	ND< 4.82	U	ND< 4.78	U	ND< 5.81	U	ND< 6.03	U	ND< 4.52	U	ND< 6.52	U
1,2,4-Trichlorobenzene		ND< 5.22	U	ND< 5.68	U	ND< 4.16	U	ND< 7.77	U	ND< 4.90	U	ND< 5.80	U	ND< 4.82	U	ND< 4.78	U	ND< 5.81	U	ND< 6.03	U	ND< 4.52	U	ND< 6.52	U
1,2,4-Trimethylbenzene	52000	ND< 2.09	U	ND< 2.27	U	ND< 1.66	U	ND< 3.11	U	ND< 1.96	U	ND< 2.32	U	ND< 1.93	U	ND< 1.91	U	ND< 2.32	U	ND< 2.41	U	ND< 1.81	U	ND< 2.61	U
1,2-Dibromo-3-Chloropropane		ND< 10.4	U	ND< 11.4	U	ND< 8.31	U	ND< 15.5	U	ND< 9.81	U	ND< 11.6	U	ND< 9.65	U	ND< 9.57	U	ND< 11.6	U	ND< 12.1	U	ND< 9.04	U	ND< 13.0	U
1,2-Dibromoethane (Ethylene Dibromide)		ND< 2.09	U	ND< 2.27	U	ND< 1.66	U	ND< 3.11	U	ND< 1.96	U	ND< 2.32	U	ND< 1.93	U	ND< 1.91	U	ND< 2.32	U	ND< 2.41	U	ND< 1.81	U	ND< 2.61	U
1,2-Dichlorobenzene	100000	ND< 2.09	U	ND< 2.27	U	ND< 1.66	U	ND< 3.11	U	ND< 1.96	U	ND< 2.32	U	ND< 1.93	U	ND< 1.91	U	ND< 2.32	U	ND< 2.41	U	ND< 1.81	U	ND< 2.61	U
1,2-Dichloroethane	3100	ND< 2.09	U	ND< 2.27	U	ND< 1.66	U	ND< 3.11	U	ND< 1.96	U	ND< 2.32	U	ND< 1.93	U	ND< 1.91	U	ND< 2.32	U	ND< 2.41	U	ND< 1.81	U	ND< 2.61	U
1,2-Dichloropropane		ND< 2.09	U	ND< 2.27	U	ND< 1.66	U	ND< 3.11	U	ND< 1.96	U	ND< 2.32	U	ND< 1.93	U	ND< 1.91	U	ND< 2.32	U	ND< 2.41	U	ND< 1.81	U	ND< 2.61	U
1,3,5-Trimethylbenzene (Mesitylene)	52000	ND< 2.09	U	ND< 2.27	U	ND< 1.66	U	ND< 3.11	U	ND< 1.96	U	ND< 2.32	U	ND< 1.93	U	ND< 1.91	U	ND< 2.32	U	ND< 2.41	U	ND< 1.81	U	ND< 2.61	U
1,3-Dichlorobenzene	49000	ND< 2.09	U	ND< 2.27	U	ND< 1.66	U	ND< 3.11	U	ND< 1.96	U	ND< 2.32	U	ND< 1.93	U	ND< 1.91	U	ND< 2.32	U	ND< 2.41	U	ND< 1.81	U	ND< 2.61	U
1,4-Dichlorobenzene	13000	ND< 2.09	U	ND< 2.27	U	ND< 1.66	U	ND< 3.11	U	ND< 1.96	U	ND< 2.32	U	ND< 1.93	U	ND< 1.91	U	ND< 2.32	U	ND< 2.41	U	ND< 1.81	U	ND< 2.61	U
1,4-Dioxane (P-Dioxane)	13000	ND< 20.9	U	ND< 22.7	U	ND< 16.6	U	ND< 31.1	U	ND< 19.6	U	ND< 23.2	U	ND< 19.3	U	ND< 19.1	U	ND< 23.2	U	ND< 24.1	U	ND< 18.1	U	ND< 26.1	U
2-Hexanone		ND< 5.22	U	ND< 5.68	U	ND< 4.16	U	ND< 7.77	U	ND< 4.90	U	ND< 5.80	U	ND< 4.82	U	ND< 4.78	U	ND< 5.81	U	ND< 6.03	U	ND< 4.52	U	ND< 6.52	U
Acetone	100000	ND< 10.4	U	14.9		ND< 8.31	U	33.5		6.29	J	ND< 11.6	U	ND< 9.65	U	ND< 9.57	U	ND< 11.6	U	ND< 12.1	U	ND< 9.04	U	ND< 13.0	U
Benzene	4800	ND< 2.09	U	ND< 2.27	U	ND< 1.66	U	3.02	J	ND< 1.96	U	ND< 2.32	U	ND< 1.93	U	ND< 1.91	U	ND< 2.32	U	ND< 2.41	U	ND< 1.81	U	ND< 2.61	U
Bromochloromethane		ND< 5.22	U	ND< 5.68	U	ND< 4.16	U	ND< 7.77	U	ND< 4.90	U	ND< 5.80	U	ND< 4.82	U	ND< 4.78	U	ND< 5.81	U	ND< 6.03	U	ND< 4.52	U	ND< 6.52	U
Bromodichloromethane		ND< 2.09	U	ND< 2.27	U	ND< 1.66	U	ND< 3.11	U	ND< 1.96	U	ND< 2.32	U	ND< 1.93	U	ND< 1.91	U	ND< 2.32	U	ND< 2.41	U	ND< 1.81	U	ND< 2.61	U
Bromoform		ND< 5.22	U	ND< 5.68	U	ND< 4.16	U	ND< 7.77	U	ND< 4.90	U	ND< 5.80	U	ND< 4.82	U	ND< 4.78	U	ND< 5.81	U	ND< 6.03	U	ND< 4.52	U	ND< 6.52	U
Bromomethane		ND< 2.09	U	ND< 2.27	U	ND< 1.66	U	ND< 3.11	U	ND< 1.96	U	ND< 2.32	U	ND< 1.93	U	ND< 1.91	U	ND< 2.32	U	ND< 2.41	U	ND< 1.81	U	ND< 2.61	U
Carbon Disulfide		ND< 2.09	U	ND< 2.27	U	ND< 1.66	U	ND< 3.11	U	ND< 1.96	U	ND< 2.32	U	ND< 1.93	U	ND< 1.91	U	ND< 2.32	U	ND< 2.41	U	ND< 1.81	U	ND< 2.61	U
Carbon Tetrachloride	2400	ND< 2.09	U	ND< 2.27	U	ND< 1.66	U	ND< 3.11	U	ND< 1.96	U	ND< 2.32	U	ND< 1.93	U	ND< 1.91	U	ND< 2.32	U	ND< 2.41	U	ND< 1.81	U	ND< 2.61	U
Chlorobenzene	100000	ND< 2.09	U	ND< 2.27	U	ND< 1.66	U	ND< 3.11	U	ND< 1.96	U	ND< 2.32	U	ND< 1.93	U	ND< 1.91	U	ND< 2.32	U	ND< 2.41	U	ND< 1.81	U	ND< 2.61	U
Chloroethane		ND< 2.09	U	ND< 2.27	U	ND< 1.66	U	ND< 3.11	U	ND< 1.96	U	ND< 2.32	U	ND< 1.93	U	ND< 1.91	U	ND< 2.32	U	ND< 2.41	U	ND< 1.81	U	ND< 2.61	U
Chloroform	49000	ND< 2.09	U	ND< 2.27	U	ND< 1.66	U	ND< 3.11	U	ND< 1.96	U	ND< 2.32	U	ND< 1.93	U	ND< 1.91	U	ND< 2.32	U	ND< 2.41	U	ND< 1.81	U	ND< 2.61	U
Chloromethane		ND< 2.09	U	ND< 2.27	U	ND< 1.66	U	ND< 3.11	U	ND< 1.96	U	ND< 2.32	U	ND< 1.93	U	ND< 1.91	U	ND< 2.32	U	ND< 2.41	U	ND< 1.81	U	ND< 2.61	U
Cis-1,2-Dichloroethylene	100000	ND< 2.09	U	ND< 2.27	U	ND< 1.66	U	ND< 3.11	U	ND< 1.96	U	ND< 2.32	U	ND< 1.93	U	ND< 1.91	U	ND< 2.32	U	ND< 2.41	U	ND< 1.81	U	ND< 2.61	U
Cis-1,3-Dichloropropene		ND< 2.09	U	ND< 2.27	U	ND< 1.66	U	ND< 3.11	U	ND< 1.96	U	ND< 2.32	U	ND< 1.93	U	ND< 1.91	U	ND< 2.32	U	ND< 2.41	U	ND< 1.81	U	ND< 2.61	U
Cyclohexane		ND< 10.4	U	ND< 11.4	U	ND< 8.31	U	25.0		ND< 9.81	U	ND< 11.6	U	ND< 9.65	U	ND< 9.57	U	ND< 11.6	U	ND< 12.1	U	ND< 9.04	U	ND< 13.0	U
Cymene		ND< 2.09	U	ND< 2.27	U	ND< 1.66	U	ND< 3.11	U	ND< 1.96	U	ND< 2.32	U	ND< 1.93	U	ND< 1.91	U	ND< 2.32	U	ND< 2.41	U	ND< 1.81	U	ND< 2.61	U
Dibromochloromethane		ND< 2.09	U	ND< 2.27	U	ND< 1.66	U	ND< 3.11	U	ND< 1.96	U	ND< 2.32	U	ND< 1.93	U	ND< 1.91	U	ND< 2.32	U	ND< 2.41	U	ND< 1.81	U	ND< 2.61	U
Dichlorodifluoromethane		ND< 2.09	U	ND< 2.27	U	ND< 1.66	U	ND< 3.11	U	ND< 1.96	U	ND< 2.32	U	ND< 1.93	U	ND< 1.91	U	ND< 2.32	U	ND< 2.41	U	ND< 1.81	U	ND< 2.61	U
Ethylbenzene	41000	ND< 2.09	U	1.39	J	ND< 1.66	U	2.13	J	ND< 1.96	U	ND< 2.32	U	ND< 1.93	U	ND< 1.91	U	ND< 2.32	U	ND< 2.41	U	ND< 1.81	U	ND< 2.61	U
Isopropylbenzene (Cumene)		ND< 2.09	U	ND< 2.27	U	ND< 1.66	U	ND< 3.11	U	ND< 1.96	U	ND< 2.32	U	ND< 1.93	U	ND< 1.91	U	ND< 2.32	U	ND< 2.41	U	ND< 1.81	U	ND< 2.61	U
Methyl Acetate		ND< 2.09	U	48.2		ND< 1.66	U	ND< 3.11	U	ND< 1.96	U	ND< 2.32	U	ND< 1.93	U	ND< 1.91	U	ND< 2.32	U	ND< 2.41	U	ND< 1.81	U	ND< 2.61	U
Methyl Ethyl Ketone (2-Butanone)	100000	ND< 10.4	U	ND< 11.4	U	ND< 8.31	U	ND< 15.5	U	ND< 9.81	U	ND< 11.6	U	ND< 9.65	U	ND< 9.57	U	ND< 11.6	U	ND< 12.1	U	ND< 9.04	U	ND< 13.0	U
Methyl Isobutyl Ketone (4-Methyl-2-Pentanone)		ND< 5.22	U	ND< 5.68	U	ND< 4.16	U	ND< 7.77	U	ND< 4.90	U	ND< 5.80	U	ND< 4.82	U	ND< 4.78	U	ND< 5.81	U	ND< 6.03	U	ND< 4.52	U	ND< 6.52	U
Methyl Tert-Butyl Ether (MTBE)	100000	ND< 2.09	U	ND< 2.27	U	ND< 1.66	U	ND< 3.11	U	ND< 1.96	U	ND< 2.32	U	ND< 1.93	U	ND< 1.91	U	ND< 2.32	U	ND< 2.41	U	ND< 1.81	U	ND< 2.61	U
Methylcyclohexane		ND< 2.09	U	ND< 2.27	U	ND< 1.66	U	44.2		ND< 1.96	U	ND< 2.32	U	1.07	J	1.84	J	ND< 2.32	U	4.27		ND< 1.81	U	ND< 2.61	U
Methylene Chloride	100000	ND< 5.22	U	ND< 5.68	U	ND< 4.16	U	ND< 7.77	U	ND< 4.90	U	ND< 5.80	U	ND< 4.82	U	ND< 4.78	U	ND< 5.81	U	ND< 6.03	U	ND< 4.52	U	ND< 6.52	U
M-P-Xylene		ND< 2.09	U	4.61		ND< 1.66	U	10.9		1.31	J	ND< 2.32	U	ND< 1.93	U	ND< 1.91	U	ND< 2.32	U	ND< 2.41	U	ND< 1.81	U	ND< 2.61	U
Naphthalene	100000	ND< 5.22	U	ND< 5.68	U	ND< 4.16	U	4.60	J	ND< 4.90	U	ND< 5.80	U	ND< 4.82	U	ND< 4.78	U	ND< 5.81	U	ND< 6.03	U	ND< 4.52	U	ND< 6.52	U
N-Butylbenzene	100000	ND< 2.09	U	ND< 2.27	U	ND< 1.66	U	ND< 3.11	U	ND< 1.96	U	ND< 2.32	U	ND< 1.93	U	ND< 1.91	U	ND< 2.32	U	ND< 2.41	U	ND< 1.81	U	ND< 2.61	U
N-Propylbenzene	100000	ND< 2.09	U	ND< 2.27	U	ND< 1.66	U	ND< 3.11	U	ND< 1.96	U	ND< 2.32	U	ND< 1.93	U	ND< 1.91	U	ND< 2.32	U	ND< 2.41	U	ND< 1.81	U	ND< 2.61	U
O-Xylene (1,2-Dimethylbenzene)		ND< 2.09	U	1.83	J	ND< 1.66	U	8.02		ND< 1.96	U	ND< 2.32	U	ND< 1.93	U	ND< 1.91	U	ND< 2.32	U	ND< 2.41	U	ND< 1.81	U	ND< 2.61	U
Sec-Butylbenzene	100000	ND< 2.09	U	ND< 2.27	U	ND< 1.66	U	ND< 3.11	U	ND< 1.96	U	ND< 2.32	U	ND< 1.93	U	ND< 1.91	U	ND< 2.32	U	ND< 2.41	U	ND< 1.81	U	ND< 2.61	U
Styrene		ND< 5.22	U	ND< 5.68	U	ND< 4.16	U	ND< 7.77	U	ND< 4.90	U	ND< 5.80	U	ND< 4.82	U	ND< 4.78	U	ND< 5.81	U	ND< 6.03	U	ND< 4.52	U	ND< 6.52	U
T-Butylbenzene	100000	ND< 2.09	U	ND< 2.27	U	ND< 1.66	U	ND< 3.11	U	ND< 1.96	U	ND< 2.32	U	ND< 1.93	U	ND< 1.91	U	ND< 2.32	U	ND< 2.41	U	ND< 1.81	U	ND< 2.61	U
Tetrachloroethylene (PCE)	19000	ND< 2.09	U	ND< 2.27	U	ND< 1.66	U	ND< 3.11	U	ND< 1.96	U	ND< 2.32	U	ND< 1.93	U	ND< 1.91	U	ND< 2.32	U	ND< 2.41	U	ND< 1.81	U	ND< 2.61	U
Toluene	100000	1.35	J	6.10		ND< 1.66	U	8.92		1.23	J	ND< 2.32	U	ND< 1.93	U	ND< 1.91	U	ND< 2.32	U	ND< 2.41	U	ND< 1.81	U	ND< 2.61	U
Trans-1,2-Dichloroethene	100000	ND< 2.09	U	ND< 2.27	U	ND< 1.66	U	ND< 3.11	U	ND< 1.96	U	ND< 2.32	U	ND< 1.93	U	ND< 1.91	U	ND< 2.32	U	ND< 2.41	U	ND< 1.81	U	ND< 2.61	U
Trans-1,3-Dichloropropene		ND< 2.09	U	ND< 2.27	U	ND< 1.66	U	ND< 3.11	U	ND< 1.96	U	ND< 2.32	U	ND< 1.93	U	ND< 1.91	U	ND< 2.32	U	ND< 2.41	U	ND< 1.81	U	ND< 2.61	U
Trichloroethylene (TCE)	21000	ND< 2.09	U	ND< 2.27	U	ND< 1.66	U	ND< 3.11	U	ND< 1.96	U	ND< 2.32	U	ND< 1.93	U	ND< 1.91	U	ND< 2.32	U	ND< 2.41	U	ND< 1.81	U	ND< 2.61	U
Trichlorofluoromethane		ND< 2.09	U	ND< 2.27	U	ND< 1.66	U	ND< 3.11	U	ND< 1.96	U	ND< 2.32	U	ND< 1.93	U	ND< 1.91	U	ND< 2.32	U	ND< 2.41	U	ND< 1.81	U	ND< 2.61	U
Vinyl Chloride	900	ND< 2.09	U	ND< 2.27	U	ND< 1.66	U	ND< 3.11	U	ND< 1.96	U	ND< 2.32	U	ND< 1.93	U	ND< 1.91	U	ND< 2.32	U	ND< 2.41	U	ND< 1.81	U	ND< 2.61	U

NOTES:

1. Soil sample analytical results are compared to the New York State Department of Environmental Conservation (NYSDEC) Title 6 of the official compilation of New York Codes, Rules, and Regulations (NYCRR) Part 375 Restricted Residential Soil Cleanup Objectives (RRSCOs).
2. RRSCO exceedances are in bold and highlighted yellow.
3. ND = Not Detected
4. Results shown as "ND" with Reporting Limits exceeding RRSCOs are in bold.
5. VOCs = Volatile Organic Compounds
6. µg/kg = micrograms per kilogram.
7. Qualifier (Q) definitions are provided in the official lab reports.

TABLE 1A: Volatile Organic Compounds (VOCs) in Soil
AOC-1 - Power House and Former Coal Storage Area
Soil Sample Results (non-QA/QC)
Hudson River Psychiatric Center - North BCP Site, Poughkeepsie, NY
PVE Sheffler File #560909

	Date Sampled	5/7/2014		5/7/2014		5/6/2014		5/6/2014		7/17/2014		7/17/2014		11/25/2014		12/15/2014		11/25/2014		12/15/2014		11/25/2014		12/15/2014	
	Location	PH-SS-4		PH-SS-4		PH-SS-6		PH-SS-6		PH-SS-7		PH-SS-7		PH-SS-8		PH-SS-8		PH-SS-9		PH-SS-9		PH-SS-10		PH-SS-10	
	Sample ID	PH-SS-4 1-2'		PH-SS-4 4-5'		PH-SS-6 0-2"		PH-SS-6 1-2'		PH-SS-7 0-2"		PH-SS-7 1-2'		PH-SS-8 (0-2")		20141215		PH-SS-9 (0-2")		PH-SS-9 2-24"		PH-SS-10 (0-2")		PH-SS-10 2-24"	
Analyte	RRSCOs	Result	Q	Result	Q	Result	Q	Result	Q	Result	Q	Result	Q	Result	Q	Result	Q	Result	Q	Result	Q	Result	Q	Result	Q
VOCs (µg/kg)																									
1,1,1-Trichloroethane	100000	ND< 1.87	U	ND< 2.03	U	ND< 2.44	U	ND< 2.20	U	ND< 2.43	U	ND< 2.00	U	ND< 2.55	U	ND< 3.18	U	ND< 3.33	U	ND< 3.29	U	ND< 3.30	U	ND< 3.19	U
1,1,2,2-Tetrachloroethane		ND< 1.87	U	ND< 2.03	U	ND< 2.44	U	ND< 2.20	U	ND< 2.43	U	ND< 2.00	U	ND< 2.55	U	ND< 3.18	U	ND< 3.33	U	ND< 3.29	U	ND< 3.30	U	ND< 3.19	U
1,1,2-Trichloro-1,2,2-Trifluoroethane		ND< 1.87	U	ND< 2.03	U	ND< 2.44	U	ND< 2.20	U	ND< 2.43	U	ND< 2.00	U	ND< 2.55	U	ND< 3.18	U	ND< 3.33	U	ND< 3.29	U	ND< 3.30	U	ND< 3.19	U
1,1,2-Trichloroethane		ND< 1.87	U	ND< 2.03	U	ND< 2.44	U	ND< 2.20	U	ND< 2.43	U	ND< 2.00	U	ND< 2.55	U	ND< 3.18	U	ND< 3.33	U	ND< 3.29	U	ND< 3.30	U	ND< 3.19	U
1,1-Dichloroethane	26000	ND< 1.87	U	ND< 2.03	U	ND< 2.44	U	ND< 2.20	U	ND< 2.43	U	ND< 2.00	U	ND< 2.55	U	ND< 3.18	U	ND< 3.33	U	ND< 3.29	U	ND< 3.30	U	ND< 3.19	U
1,1-Dichloroethene	100000	ND< 1.87	U	ND< 2.03	U	ND< 2.44	U	ND< 2.20	U	ND< 2.43	U	ND< 2.00	U	ND< 2.55	U	ND< 3.18	U	ND< 3.33	U	ND< 3.29	U	ND< 3.30	U	ND< 3.19	U
1,2,3-Trichlorobenzene		ND< 4.69	U	ND< 5.08	U	ND< 6.09	U	ND< 5.50	U	ND< 6.07	U	ND< 5.01	U	ND< 6.39	U	ND< 7.94	U	ND< 8.33	U	ND< 8.23	U	ND< 8.24	U	ND< 7.96	U
1,2,4-Trichlorobenzene		ND< 4.69	U	ND< 5.08	U	ND< 6.09	U	ND< 5.50	U	ND< 6.07	U	ND< 5.01	U	ND< 6.39	U	ND< 7.94	U	ND< 8.33	U	ND< 8.23	U	ND< 8.24	U	ND< 7.96	U
1,2,4-Trimethylbenzene	52000	ND< 1.87	U	ND< 2.03	U	ND< 2.44	U	ND< 2.20	U	ND< 2.43	U	ND< 2.00	U	ND< 2.55	U	ND< 3.18	U	ND< 3.33	U	ND< 3.29	U	ND< 3.30	U	ND< 3.19	U
1,2-Dibromo-3-Chloropropane		ND< 9.37	U	ND< 10.2	U	ND< 12.2	U	ND< 11.0	U	ND< 12.1	U	ND< 10.0	U	ND< 12.8	U	ND< 15.9	U	ND< 16.7	U	ND< 16.5	U	ND< 16.5	U	ND< 15.9	U
1,2-Dibromoethane (Ethylene Dibromide)		ND< 1.87	U	ND< 2.03	U	ND< 2.44	U	ND< 2.20	U	ND< 2.43	U	ND< 2.00	U	ND< 2.55	U	ND< 3.18	U	ND< 3.33	U	ND< 3.29	U	ND< 3.30	U	ND< 3.19	U
1,2-Dichlorobenzene	100000	ND< 1.87	U	ND< 2.03	U	ND< 2.44	U	ND< 2.20	U	ND< 2.43	U	ND< 2.00	U	ND< 2.55	U	ND< 3.18	U	ND< 3.33	U	ND< 3.29	U	ND< 3.30	U	ND< 3.19	U
1,2-Dichloroethane	3100	ND< 1.87	U	ND< 2.03	U	ND< 2.44	U	ND< 2.20	U	ND< 2.43	U	ND< 2.00	U	ND< 2.55	U	ND< 3.18	U	ND< 3.33	U	ND< 3.29	U	ND< 3.30	U	ND< 3.19	U
1,2-Dichloropropane		ND< 1.87	U	ND< 2.03	U	ND< 2.44	U	ND< 2.20	U	ND< 2.43	U	ND< 2.00	U	ND< 2.55	U	ND< 3.18	U	ND< 3.33	U	ND< 3.29	U	ND< 3.30	U	ND< 3.19	U
1,3,5-Trimethylbenzene (Mesitylene)	52000	ND< 1.87	U	ND< 2.03	U	ND< 2.44	U	ND< 2.20	U	ND< 2.43	U	ND< 2.00	U	ND< 2.55	U	ND< 3.18	U	ND< 3.33	U	ND< 3.29	U	ND< 3.30	U	ND< 3.19	U
1,3-Dichlorobenzene	49000	ND< 1.87	U	ND< 2.03	U	ND< 2.44	U	ND< 2.20	U	ND< 2.43	U	ND< 2.00	U	ND< 2.55	U	ND< 3.18	U	ND< 3.33	U	ND< 3.29	U	ND< 3.30	U	ND< 3.19	U
1,4-Dichlorobenzene	13000	ND< 1.87	U	ND< 2.03	U	ND< 2.44	U	ND< 2.20	U	ND< 2.43	U	ND< 2.00	U	ND< 2.55	U	ND< 3.18	U	ND< 3.33	U	ND< 3.29	U	ND< 3.30	U	ND< 3.19	U
1,4-Dioxane (P-Dioxane)	13000	ND< 18.7	U	ND< 20.3	U	ND< 24.4	U	ND< 22.0	U	ND< 24.3	U	ND< 20.0	U	ND< 25.5	U	ND< 31.8	U	ND< 33.3	U	ND< 32.9	U	ND< 33.0	U	ND< 31.9	U
2-Hexanone		ND< 4.69	U	ND< 5.08	U	ND< 6.09	U	ND< 5.50	U	ND< 6.07	U	ND< 5.01	U	ND< 6.39	U	ND< 7.94	U	ND< 8.33	U	ND< 8.23	U	ND< 8.24	U	ND< 7.96	U
Acetone	100000	ND< 9.37	U	ND< 10.2	U	ND< 12.2	U	ND< 11.0	U	ND< 12.1	U	ND< 10.0	U	ND< 12.8	U	ND< 15.9	U	ND< 16.7	U	ND< 16.5	U	ND< 16.5	U	ND< 15.9	U
Benzene	4800	ND< 1.87	U	ND< 2.03	U	ND< 2.44	U	ND< 2.20	U	ND< 2.43	U	ND< 2.00	U	ND< 2.55	U	ND< 3.18	U	ND< 3.33	U	ND< 3.29	U	ND< 3.30	U	ND< 3.19	U
Bromochloromethane		ND< 4.69	U	ND< 5.08	U	ND< 6.09	U	ND< 5.50	U	ND< 6.07	U	ND< 5.01	U	ND< 6.39	U	ND< 7.94	U	ND< 8.33	U	ND< 8.23	U	ND< 8.24	U	ND< 7.96	U
Bromodichloromethane		ND< 1.87	U	ND< 2.03	U	ND< 2.44	U	ND< 2.20	U	ND< 2.43	U	ND< 2.00	U	ND< 2.55	U	ND< 3.18	U	ND< 3.33	U	ND< 3.29	U	ND< 3.30	U	ND< 3.19	U
Bromoform		ND< 4.69	U	ND< 5.08	U	ND< 6.09	U	ND< 5.50	U	ND< 6.07	U	ND< 5.01	U	ND< 6.39	U	ND< 7.94	U	ND< 8.33	U	ND< 8.23	U	ND< 8.24	U	ND< 7.96	U
Bromomethane		ND< 1.87	U	ND< 2.03	U	ND< 2.44	U	ND< 2.20	U	ND< 2.43	U	ND< 2.00	U	ND< 2.55	U	ND< 3.18	U	ND< 3.33	U	ND< 3.29	U	ND< 3.30	U	ND< 3.19	U
Carbon Disulfide		ND< 1.87	U	ND< 2.03	U	ND< 2.44	U	ND< 2.20	U	ND< 2.43	U	ND< 2.00	U	ND< 2.55	U	ND< 3.18	U	ND< 3.33	U	ND< 3.29	U	ND< 3.30	U	ND< 3.19	U
Carbon Tetrachloride	2400	ND< 1.87	U	ND< 2.03	U	ND< 2.44	U	ND< 2.20	U	ND< 2.43	U	ND< 2.00	U	ND< 2.55	U	ND< 3.18	U	ND< 3.33	U	ND< 3.29	U	ND< 3.30	U	ND< 3.19	U
Chlorobenzene	100000	ND< 1.87	U	ND< 2.03	U	ND< 2.44	U	ND< 2.20	U	ND< 2.43	U	ND< 2.00	U	ND< 2.55	U	ND< 3.18	U	ND< 3.33	U	ND< 3.29	U	ND< 3.30	U	ND< 3.19	U
Chloroethane		ND< 1.87	U	ND< 2.03	U	ND< 2.44	U	ND< 2.20	U	ND< 2.43	U	ND< 2.00	U	ND< 2.55	U	ND< 3.18	U	ND< 3.33	U	ND< 3.29	U	ND< 3.30	U	ND< 3.19	U
Chloroform	49000	ND< 1.87	U	ND< 2.03	U	ND< 2.44	U	ND< 2.20	U	ND< 2.43	U	ND< 2.00	U	ND< 2.55	U	ND< 3.18	U	ND< 3.33	U	ND< 3.29	U	ND< 3.30	U	ND< 3.19	U
Chloromethane		ND< 1.87	U	ND< 2.03	U	ND< 2.44	U	ND< 2.20	U	ND< 2.43	U	ND< 2.00	U	ND< 2.55	U	ND< 3.18	U	ND< 3.33	U	ND< 3.29	U	ND< 3.30	U	ND< 3.19	U
Cis-1,2-Dichloroethylene	100000	ND< 1.87	U	ND< 2.03	U	ND< 2.44	U	ND< 2.20	U	ND< 2.43	U	ND< 2.00	U	ND< 2.55	U	ND< 3.18	U	ND< 3.33	U	ND< 3.29	U	ND< 3.30	U	ND< 3.19	U
Cis-1,3-Dichloropropene		ND< 1.87	U	ND< 2.03	U	ND< 2.44	U	ND< 2.20	U	ND< 2.43	U	ND< 2.00	U	ND< 2.55	U	ND< 3.18	U	ND< 3.33	U	ND< 3.29	U	ND< 3.30	U	ND< 3.19	U
Cyclohexane		ND< 9.37	U	ND< 10.2	U	ND< 12.2	U	ND< 11.0	U	ND< 12.1	U	ND< 10.0	U	ND< 12.8	U	ND< 15.9	U	ND< 16.7	U	ND< 16.5	U	ND< 16.5	U	22.9	
Cymene		ND< 1.87	U	ND< 2.03	U	ND< 2.44	U	ND< 2.20	U	ND< 2.43	U	ND< 2.00	U	ND< 2.55	U	ND< 3.18	U	ND< 3.33	U	ND< 3.29	U	ND< 3.30	U	ND< 3.19	U
Dibromochloromethane		ND< 1.87	U	ND< 2.03	U	ND< 2.44	U	ND< 2.20	U	ND< 2.43	U	ND< 2.00	U	ND< 2.55	U	ND< 3.18	U	ND< 3.33	U	ND< 3.29	U	ND< 3.30	U	ND< 3.19	U
Dichlorodifluoromethane		ND< 1.87	U	ND< 2.03	U	ND< 2.44	U	ND< 2.20	U	ND< 2.43	U	ND< 2.00	U	ND< 2.55	U	ND< 3.18	U	ND< 3.33	U	ND< 3.29	U	ND< 3.30	U	ND< 3.19	U
Ethylbenzene	41000	ND< 1.87	U	ND< 2.03	U	ND< 2.44	U	ND< 2.20	U	ND< 2.43	U	ND< 2.00	U	ND< 2.55	U	ND< 3.18	U	ND< 3.33	U	ND< 3.29	U	ND< 3.30	U	ND< 3.19	U
Isopropylbenzene (Cumene)		ND< 1.87	U	ND< 2.03	U	ND< 2.44	U	ND< 2.20	U	ND< 2.43	U	ND< 2.00	U	ND< 2.55	U	ND< 3.18	U	ND< 3.33	U	ND< 3.29	U	ND< 3.30	U	ND< 3.19	U
Methyl Acetate		ND< 1.87	U	ND< 2.03	U	ND< 2.44	U	ND< 2.20	U	ND< 2.43	U	ND< 2.00	U	ND< 2.55	U	ND< 3.18	U	ND< 3.33	U	ND< 3.29	U	ND< 3.30	U	ND< 3.19	U
Methyl Ethyl Ketone (2-Butanone)	100000	ND< 9.37	U	ND< 10.2	U	ND< 12.2	U	ND< 11.0	U	ND< 12.1	U	ND< 10.0	U	ND< 12.8	U	ND< 15.9	U	ND< 16.7	U	ND< 16.5	U	ND< 16.5	U	ND< 15.9	U
Methyl Isobutyl Ketone (4-Methyl-2-Pentanone)		ND< 4.69	U	ND< 5.08	U	ND< 6.09	U	ND< 5.50	U	ND< 6.07	U	ND< 5.01	U	ND< 6.39	U	ND< 7.94	U	ND< 8.33	U	ND< 8.23	U	ND< 8.24	U	ND< 7.96	U
Methyl Tert-Butyl Ether (MTBE)	100000	ND< 1.87	U	ND< 2.03	U	ND< 2.44	U	ND< 2.20	U	ND< 2.43	U	ND< 2.00	U	ND< 2.55	U	ND< 3.18	U	ND< 3.33	U	ND< 3.29	U	ND< 3.30	U	ND< 3.19	U
Methylcyclohexane		ND< 1.87	U	ND< 2.03	U	ND< 2.44	U	ND< 2.20	U	ND< 2.43	U	ND< 2.00	U	ND< 2.55	U	ND< 3.18	U	ND< 3.33	U	16.7		2.30	J	38.0	
Methylene Chloride	100000	ND< 4.69	U	ND< 5.08	U	ND< 6.09	U	ND< 5.50	U	ND< 6.07	U	ND< 5.01	U	ND< 6.39	U	ND< 7.94	U	ND< 8.33	U	ND< 8.23	U	ND< 8.24	U	ND< 7.96	U
M-P-Xylene		ND< 1.87	U	ND< 2.03	U	ND< 2.44	U	ND< 2.20	U	ND< 2.43	U	ND< 2.00	U	ND< 2.55	U	ND< 3.18	U	ND< 3.33	U	3.73		ND< 3.30	U	4.54	
Naphthalene	100000	ND< 4.69	U	ND< 5.08	U	ND< 6.09	U	ND< 5.50	U	3.48	J	3.40	J	ND< 6.39	U	ND< 7.94	U	ND< 8.33	U	ND< 8.23	U	ND< 8.24	U	ND< 7.96	U
N-Butylbenzene	100000	ND< 1.87	U	ND< 2.03	U	ND< 2.44	U	ND< 2.20	U	ND< 2.43	U	ND< 2.00	U	ND< 2.55	U	ND< 3.18	U	ND< 3.33	U	ND< 3.29	U	ND< 3.30	U	ND< 3.19	U
N-Propylbenzene	100000	ND< 1.87	U	ND< 2.03	U	ND< 2.44	U	ND< 2.20	U	ND< 2.43	U	ND< 2.00	U	ND< 2.55	U	ND< 3.18	U	ND< 3.33	U	ND< 3.29	U	ND< 3.30	U	ND< 3.19	U
O-Xylene (1,2-Dimethylbenzene)		ND< 1.87	U	ND< 2.03	U	ND< 2.44	U	ND< 2.20	U	ND< 2.43	U	ND< 2.00	U	ND< 2.55	U	ND< 3.18	U	ND< 3.33	U	2.19	J	ND< 3.30	U	3.43	
Sec-Butylbenzene	100000	ND< 1.87	U	ND< 2.03	U	ND< 2.44	U	ND< 2.20	U	ND< 2.43	U	ND< 2.00	U	ND< 2.55	U	ND< 3.18	U	ND< 3.33	U	ND< 3.29	U	ND< 3.30	U	ND< 3.19	U
Styrene		ND< 4.69	U	ND< 5.08	U	ND< 6.09	U	ND< 5.50	U	ND< 6.07	U	ND< 5.01	U	ND< 6.39	U	ND< 7.94	U	ND< 8.33	U	ND< 8.23	U	ND< 8.24	U	ND< 7.96	U
T-Butylbenzene	100000	ND< 1.87	U	ND< 2.03	U	ND< 2.44	U	ND< 2.20	U	ND< 2.43	U	ND< 2.00	U	ND< 2.55	U	ND< 3.18	U	ND< 3.33	U	ND< 3.29	U	ND< 3.30	U	ND< 3.19	U
Tetrachloroethylene (PCE)	19000	ND< 1.87	U	ND< 2.03	U	ND< 2.44	U	ND< 2.20	U	ND< 2.43	U	ND< 2.00	U	ND< 2.55	U	ND< 3.18	U	ND< 3.33	U	ND< 3.29	U	ND< 3.30	U	ND< 3.19	U
Toluene	100000	ND< 1.87	U	ND< 2.03	U	ND< 2.44	U	ND< 2.20	U	ND< 2.43	U	ND< 2.00	U	ND< 2.55	U	ND< 3.18	U	ND< 3.33	U	4.43		ND< 3.30	U	2.55	J
Trans-1,2-Dichloroethene	100000	ND< 1.87	U	ND< 2.03	U	ND< 2.44	U	ND< 2.20	U	ND< 2.43	U	ND< 2.00	U	ND< 2.55	U	ND< 3.18	U	ND< 3.33	U	ND< 3.29	U	ND< 3.30	U	ND< 3.19	U
Trans-1,3-Dichloropropene		ND< 1.87	U	ND< 2.03	U	ND< 2.44	U	ND< 2.20	U	ND< 2.43	U	ND< 2.00	U	ND< 2.55	U	ND< 3.18	U	ND< 3.33	U	ND< 3.29	U	ND< 3.30	U	ND< 3.19	U
Trichloroethylene (TCE)	21000	ND< 1.87	U	ND< 2.03	U	ND< 2.44	U	ND< 2.20	U	ND< 2.43	U	ND< 2.00	U	ND< 2.55	U	ND< 3.18	U	ND< 3.33	U	ND< 3.29	U	ND< 3.30	U	ND< 3.19	U
Trichlorofluoromethane		ND< 1.87	U	ND< 2.03	U	ND< 2.44	U	ND< 2.20	U	ND< 2.43	U	ND< 2.00	U	ND< 2.55	U	ND< 3.18	U	ND< 3.33	U	ND< 3.29	U	ND< 3.30	U	ND< 3.19	U
Vinyl Chloride	900	ND< 1.87	U	ND< 2.03	U	ND< 2.44	U	ND< 2.20	U	ND< 2.43	U	ND< 2.00	U	ND< 2.55	U	ND< 3.18	U	ND< 3.33	U	ND< 3.29	U	ND< 3.30	U	ND< 3.19	U

NOTES:

1. Soil sample analytical results are compared to the New York State Department of Environmental Conservation (NYSDEC) Title 6 of the official compilation of New York Codes, Rules, and Regulations (NYCRR) Part 375 Restricted Residential Soil Cleanup Objectives (RRSCOs).
2. RRSCO exceedances are in bold and highlighted yellow.
3. ND = Not Detected
4. Results shown as "ND" with Reporting Limits exceeding RRSCOs are in bold.
5. VOCs = Volatile Organic Compounds
6. µg/kg = micrograms per kilogram.
7. Qualifier (Q) definitions are provided in the official lab reports.

Table 1B – SVOCs in Soil – AOC-1

TABLE 1B: Semi Volatile Organic Compounds (SVOCs) in Soil
AOC-1 - Power House and Former Coal Storage Area
Soil Sample Results (non-QA/QC)
Hudson River Psychiatric Center - North BCP Site, Poughkeepsie, NY
PVE Sheffler File #560909

	Date Sampled	5/7/2014		5/7/2014		5/7/2014		5/7/2014		5/7/2014		5/7/2014		5/7/2014		5/8/2014		5/8/2014		5/7/2014		5/8/2014		5/8/2014		5/7/2014		5/8/2014	
	Location	PH-1		PH-1		PH-1		PH-2		PH-2		PH-2		PH-3		PH-3		PH-3		PH-4		PH-4		PH-4		PH-5		PH-5	
	Sample ID	PH-1 0-2"		PH-1 1-2'		PH-1 2-3.25'		PH-2 0-2"		PH-2 1-2'		PH-2 7-9'		PH-3 0-2"		PH-3 1-2		PH-3 2-3'		PH-4 0-2"		PH-4 1-2'		PH-4 11-12'		PH-5 0-2"		PH-5 1-2'	
Analyte	RRSCOs	Result	Q	Result	Q	Result	Q	Result	Q	Result	Q	Result	Q	Result	Q	Result	Q	Result	Q	Result	Q	Result	Q	Result	Q	Result	Q	Result	Q
SVOCs (µg/kg)																													
1,2,4,5-Tetrachlorobenzene		ND< 303	U	ND< 299	U	ND< 299	U	ND< 319	U	ND< 297	U	ND< 298	U	ND< 326	U	ND< 348	U	ND< 1630	U	ND< 317	U	ND< 322	U	ND< 1570	U	ND< 320	U	ND< 324	U
1,2,4-Trichlorobenzene		ND< 303	U	ND< 299	U	ND< 299	U	ND< 319	U	ND< 297	U	ND< 298	U	ND< 326	U	ND< 348	U	ND< 1630	U	ND< 317	U	ND< 322	U	ND< 1570	U	ND< 320	U	ND< 324	U
1,2-Dichlorobenzene	100000	ND< 303	U	ND< 299	U	ND< 299	U	ND< 319	U	ND< 297	U	ND< 298	U	ND< 326	U	ND< 348	U	ND< 1630	U	ND< 317	U	ND< 322	U	ND< 1570	U	ND< 320	U	ND< 324	U
1,3-Dichlorobenzene	49000	ND< 303	U	ND< 299	U	ND< 299	U	ND< 319	U	ND< 297	U	ND< 298	U	ND< 326	U	ND< 348	U	ND< 1630	U	ND< 317	U	ND< 322	U	ND< 1570	U	ND< 320	U	ND< 324	U
1,4-Dichlorobenzene	13000	ND< 303	U	ND< 299	U	ND< 299	U	ND< 319	U	ND< 297	U	ND< 298	U	ND< 326	U	ND< 348	U	ND< 1630	U	ND< 317	U	ND< 322	U	ND< 1570	U	ND< 320	U	ND< 324	U
2,2-Oxybis(2-Chloropropane)		ND< 303	U	ND< 299	U	ND< 299	U	ND< 319	U	ND< 297	U	ND< 298	U	ND< 326	U	ND< 348	U	ND< 1630	U	ND< 317	U	ND< 322	U	ND< 1570	U	ND< 320	U	ND< 324	U
2,3,4,6-Tetrachlorophenol		ND< 303	U	ND< 299	U	ND< 299	U	ND< 319	U	ND< 297	U	ND< 298	U	ND< 326	U	ND< 348	U	ND< 1630	U	ND< 317	U	ND< 322	U	ND< 1570	U	ND< 320	U	ND< 324	U
2,4,5-Trichlorophenol		ND< 606	U	ND< 598	U	ND< 597	U	ND< 638	U	ND< 594	U	ND< 597	U	ND< 653	U	ND< 695	U	ND< 3270	U	ND< 633	U	ND< 644	U	ND< 3150	U	ND< 640	U	ND< 649	U
2,4,6-Trichlorophenol		ND< 303	U	ND< 299	U	ND< 299	U	ND< 319	U	ND< 297	U	ND< 298	U	ND< 326	U	ND< 348	U	ND< 1630	U	ND< 317	U	ND< 322	U	ND< 1570	U	ND< 320	U	ND< 324	U
2,4-Dichlorophenol		ND< 303	U	ND< 299	U	ND< 299	U	ND< 319	U	ND< 297	U	ND< 298	U	ND< 326	U	ND< 348	U	ND< 1630	U	ND< 317	U	ND< 322	U	ND< 1570	U	ND< 320	U	ND< 324	U
2,4-Dimethylphenol		ND< 303	U	ND< 299	U	ND< 299	U	ND< 319	U	ND< 297	U	ND< 298	U	ND< 326	U	ND< 348	U	ND< 1630	U	ND< 317	U	ND< 322	U	ND< 1570	U	ND< 320	U	ND< 324	U
2,4-Dinitrophenol		ND< 606	U	ND< 598	U	ND< 597	U	ND< 638	U	ND< 594	U	ND< 597	U	ND< 653	U	ND< 695	U	ND< 3270	U	ND< 633	U	ND< 644	U	ND< 3150	U	ND< 640	U	ND< 649	U
2,4-Dinitrotoluene		ND< 303	U	ND< 299	U	ND< 299	U	ND< 319	U	ND< 297	U	ND< 298	U	ND< 326	U	ND< 348	U	ND< 1630	U	ND< 317	U	ND< 322	U	ND< 1570	U	ND< 320	U	ND< 324	U
2,6-Dinitrotoluene		ND< 303	U	ND< 299	U	ND< 299	U	ND< 319	U	ND< 297	U	ND< 298	U	ND< 326	U	ND< 348	U	ND< 1630	U	ND< 317	U	ND< 322	U	ND< 1570	U	ND< 320	U	ND< 324	U
2-Chloronaphthalene		ND< 303	U	ND< 299	U	ND< 299	U	ND< 319	U	ND< 297	U	ND< 298	U	ND< 326	U	ND< 348	U	ND< 1630	U	ND< 317	U	ND< 322	U	ND< 1570	U	ND< 320	U	ND< 324	U
2-Chlorophenol		ND< 303	U	ND< 299	U	ND< 299	U	ND< 319	U	ND< 297	U	ND< 298	U	ND< 326	U	ND< 348	U	ND< 1630	U	ND< 317	U	ND< 322	U	ND< 1570	U	ND< 320	U	ND< 324	U
2-Methylnaphthalene		156	J	ND< 299	U	ND< 299	U	ND< 319	U	ND< 297	U	ND< 298	U	ND< 326	U	ND< 348	U	ND< 1630	U	ND< 317	U	ND< 322	U	ND< 1570	U	ND< 320	U	ND< 324	U
2-Methylphenol (O-Cresol)	100000	ND< 303	U	ND< 299	U	ND< 299	U	ND< 319	U	ND< 297	U	ND< 298	U	ND< 326	U	ND< 348	U	ND< 1630	U	ND< 317	U	ND< 322	U	ND< 1570	U	ND< 320	U	ND< 324	U
2-Nitroaniline		ND< 606	U	ND< 598	U	ND< 597	U	ND< 638	U	ND< 594	U	ND< 597	U	ND< 653	U	ND< 695	U	ND< 3270	U	ND< 633	U	ND< 644	U	ND< 3150	U	ND< 640	U	ND< 649	U
2-Nitrophenol		ND< 303	U	ND< 299	U	ND< 299	U	ND< 319	U	ND< 297	U	ND< 298	U	ND< 326	U	ND< 348	U	ND< 1630	U	ND< 317	U	ND< 322	U	ND< 1570	U	ND< 320	U	ND< 324	U
3,3'-Dichlorobenzidine		ND< 303	U	ND< 299	U	ND< 299	U	ND< 319	U	ND< 297	U	ND< 298	U	ND< 326	U	ND< 348	U	ND< 1630	U	ND< 317	U	ND< 322	U	ND< 1570	U	ND< 320	U	ND< 324	U
3-Methylphenol	100000	ND< 303	U	ND< 299	U	ND< 299	U	ND< 319	U	ND< 297	U	ND< 298	U	ND< 326	U	ND< 348	U	ND< 1630	U	ND< 317	U	ND< 322	U	ND< 1570	U	ND< 320	U	ND< 324	U
3-Nitroaniline		ND< 606	U	ND< 598	U	ND< 597	U	ND< 638	U	ND< 594	U	ND< 597	U	ND< 653	U	ND< 695	U	ND< 3270	U	ND< 633	U	ND< 644	U	ND< 3150	U	ND< 640	U	ND< 649	U
4,6-Dinitro-2-Methylphenol		ND< 606	U	ND< 598	U	ND< 597	U	ND< 638	U	ND< 594	U	ND< 597	U	ND< 653	U	ND< 695	U	ND< 3270	U	ND< 633	U	ND< 644	U	ND< 3150	U	ND< 640	U	ND< 649	U
4-Bromophenyl Phenyl Ether		ND< 303	U	ND< 299	U	ND< 299	U	ND< 319	U	ND< 297	U	ND< 298	U	ND< 326	U	ND< 348	U	ND< 1630	U	ND< 317	U	ND< 322	U	ND< 1570	U	ND< 320	U	ND< 324	U
4-Chloro-3-Methylphenol		ND< 303	U	ND< 299	U	ND< 299	U	ND< 319	U	ND< 297	U	ND< 298	U	ND< 326	U	ND< 348	U	ND< 1630	U	ND< 317	U	ND< 322	U	ND< 1570	U	ND< 320	U	ND< 324	U
4-Chloroaniline		ND< 303	U	ND< 299	U	ND< 299	U	ND< 319	U	ND< 297	U	ND< 298	U	ND< 326	U	ND< 348	U	ND< 1630	U	ND< 317	U	ND< 322	U	ND< 1570	U	ND< 320	U	ND< 324	U
4-Chlorophenyl Phenyl Ether		ND< 303	U	ND< 299	U	ND< 299	U	ND< 319	U	ND< 297	U	ND< 298	U	ND< 326	U	ND< 348	U	ND< 1630	U	ND< 317	U	ND< 322	U	ND< 1570	U	ND< 320	U	ND< 324	U
4-Nitroaniline		ND< 606	U	ND< 598	U	ND< 597	U	ND< 638	U	ND< 594	U	ND< 597	U	ND< 653	U	ND< 695	U	ND< 3270	U	ND< 633	U	ND< 644	U	ND< 3150	U	ND< 640	U	ND< 649	U
4-Nitrophenol		ND< 606	U	ND< 598	U	ND< 597	U	ND< 638	U	ND< 594	U	ND< 597	U	ND< 653	U	ND< 695	U	ND< 3270	U	ND< 633	U	ND< 644	U	ND< 3150	U	ND< 640	U	ND< 649	U
Acenaphthene	100000	ND< 303	U	ND< 299	U	ND< 299	U	ND< 319	U	ND< 297	U	808		ND< 326	U	ND< 348	U	ND< 1630	U	ND< 317	U	ND< 322	U	ND< 1570	U	ND< 320	U	ND< 324	U
Acenaphthylene	100000	ND< 303	U	ND< 299	U	ND< 299	U	ND< 319	U	ND< 297	U	ND< 298	U	284	J	180	J	ND< 1630	U	194	J	312	J	ND< 1570	U	229	J	472	
Acetophenone		ND< 303	U	ND< 299	U	ND< 299	U	ND< 319	U	ND< 297	U	ND< 298	U	ND< 326	U	ND< 348	U	ND< 1630	U	ND< 317	U	ND< 322	U	ND< 1570	U	ND< 320	U	ND< 324	U
Anthracene	100000	306		ND< 299	U	ND< 299	U	ND< 319	U	ND< 297	U	ND< 298	U	325	J	246	J	ND< 1630	U	205	J	373		ND< 1570	U	293	J	549	
Atrazine		ND< 303	U	ND< 299	U	ND< 299	U	ND< 319	U	ND< 297	U	ND< 298	U	ND< 326	U	ND< 348	U	ND< 1630	U	ND< 317	U	ND< 322	U	ND< 1570	U	ND< 320	U	ND< 324	U
Benzaldehyde		ND< 303	U	ND< 299	U	ND< 299	U	ND< 319	U	ND< 297	U	ND< 298	U	ND< 326	U	ND< 348	U	ND< 1630	U	ND< 317	U	ND< 322	U	ND< 1570	U	ND< 320	U	ND< 324	U
Benzo(A)Anthracene	**1000**	560		ND< 299	U	ND< 299	U	453		ND< 297	U	ND< 298	U	585		474		900	J	394		762		798	J	563		**1050**	
Benzo(A)Pyrene	**1000**	510		ND< 299	U	ND< 299	U	499		ND< 297	U	ND< 298	U	605		451		835	J	434		794		**ND< 1570**	**U**	585		**1160**	
Benzo(B)Fluoranthene	**1000**	338		ND< 299	U	ND< 299	U	332		ND< 297	U	ND< 298	U	634		218	J	**ND< 1630**	**U**	385		833		**ND< 1570**	**U**	698		955	
Benzo(G,H,I)Perylene	100000	431		ND< 299	U	ND< 299	U	446		ND< 297	U	ND< 298	U	445		299	J	ND< 1630	U	305	J	527		ND< 1570	U	378		830	
Benzo(K)Fluoranthene	**3900**	493		ND< 299	U	ND< 299	U	318	J	ND< 297	U	ND< 298	U	402		544		838	J	356		445		ND< 1570	U	231	J	969	
Benzyl Butyl Phthalate		ND< 303	U	ND< 299	U	ND< 299	U	ND< 319	U	ND< 297	U	ND< 298	U	ND< 326	U	ND< 348	U	ND< 1630	U	ND< 317	U	ND< 322	U	ND< 1570	U	ND< 320	U	ND< 324	U
Biphenyl (Diphenyl)		ND< 303	U	ND< 299	U	ND< 299	U	ND< 319	U	ND< 297	U	626		ND< 326	U	ND< 348	U	ND< 1630	U	ND< 317	U	ND< 322	U	ND< 1570	U	ND< 320	U	ND< 324	U
Bis(2-Chloroethoxy) Methane		ND< 303	U	ND< 299	U	ND< 299	U	ND< 319	U	ND< 297	U	ND< 298	U	ND< 326	U	ND< 348	U	ND< 1630	U	ND< 317	U	ND< 322	U	ND< 1570	U	ND< 320	U	ND< 324	U
Bis(2-Chloroethyl) Ether (2-Chloroethyl Ether)		ND< 303	U	ND< 299	U	ND< 299	U	ND< 319	U	ND< 297	U	ND< 298	U	ND< 326	U	ND< 348	U	ND< 1630	U	ND< 317	U	ND< 322	U	ND< 1570	U	ND< 320	U	ND< 324	U
Bis(2-Ethylhexyl) Phthalate		ND< 303	U	ND< 299	U	ND< 299	U	ND< 319	U	ND< 297	U	ND< 298	U	ND< 326	U	ND< 348	U	ND< 1630	U	ND< 317	U	ND< 322	U	ND< 1570	U	ND< 320	U	ND< 324	U
Caprolactam		ND< 303	U	ND< 299	U	ND< 299	U	ND< 319	U	ND< 297	U	ND< 298	U	ND< 326	U	ND< 348	U	ND< 1630	U	ND< 317	U	ND< 322	U	ND< 1570	U	ND< 320	U	ND< 324	U
Carbazole		198	J	ND< 299	U	ND< 299	U	ND< 319	U	ND< 297	U	ND< 298	U	ND< 326	U	ND< 348	U	ND< 1630	U	ND< 317	U	ND< 322	U	ND< 1570	U	ND< 320	U	189	J
Chrysene	**3900**	559		ND< 299	U	ND< 299	U	613		ND< 297	U	1180		629		489		865	J	443		802		1960		597		1110	
Dibenz(A,H)Anthracene	**330**	ND< 303	U	ND< 299	U	ND< 299	U	ND< 319	U	ND< 297	U	ND< 298	U	ND< 326	U	**ND< 348**	**U**	**ND< 1630**	**U**	ND< 317	U	ND< 322	U	**ND< 1570**	**U**	ND< 320	U	220	J
Dibenzofuran	59000	ND< 303	U	ND< 299	U	ND< 299	U	ND< 319	U	ND< 297	U	ND< 298	U	ND< 326	U	ND< 348	U	ND< 1630	U	ND< 317	U	ND< 322	U	ND< 1570	U	ND< 320	U	ND< 324	U
Diethyl Phthalate		ND< 303	U	ND< 299	U	ND< 299	U	ND< 319	U	ND< 297	U	ND< 298	U	ND< 326	U	ND< 348	U	ND< 1630	U	ND< 317	U	ND< 322	U	ND< 1570	U	ND< 320	U	ND< 324	U
Dimethyl Phthalate		ND< 606	U	ND< 598	U	ND< 597	U	ND< 638	U	ND< 594	U	ND< 597	U	ND< 653	U	ND< 695	U	ND< 3270	U	ND< 633	U	ND< 644	U	ND< 3150	U	ND< 640	U	ND< 649	U
Di-N-Butyl Phthalate		ND< 303	U	ND< 299	U	ND< 299	U	ND< 319	U	ND< 297	U	ND< 298	U	ND< 326	U	ND< 348	U	ND< 1630	U	ND< 317	U	ND< 322	U	ND< 1570	U	ND< 320	U	ND< 324	U
Di-N-Octylphthalate		ND< 303	U	ND< 299	U	ND< 299	U	ND< 319	U	ND< 297	U	ND< 298	U	ND< 326	U	ND< 348	U	ND< 1630	U	ND< 317	U	ND< 322	U	ND< 1570	U	ND< 320	U	ND< 324	U
Fluoranthene	100000	1210		ND< 299	U	ND< 299	U	663		ND< 297	U	ND< 298	U	1080		1000		1790		749		1360		ND< 1570	U	1080		1950	
Fluorene	100000	ND< 303	U	ND< 299	U	ND< 299	U	ND< 319	U	ND< 297	U	1080		ND< 326	U	ND< 348	U	ND< 1630	U	ND< 317	U	ND< 322	U	951	J	ND< 320	U	ND< 324	U
Hexachlorobenzene	**1200**	ND< 303	U	ND< 299	U	ND< 299	U	ND< 319	U	ND< 297	U	ND< 298	U	ND< 326	U	ND< 348	U	**ND< 1630**	**U**	ND< 317	U	ND< 322	U	**ND< 1570**	**U**	ND< 320	U	ND< 324	U
Hexachlorobutadiene		ND< 303	U	ND< 299	U	ND< 299	U	ND< 319	U	ND< 297	U	ND< 298	U	ND< 326	U	ND< 348	U	ND< 1630	U	ND< 317	U	ND< 322	U	ND< 1570	U	ND< 320	U	ND< 324	U
Hexachlorocyclopentadiene		ND< 303	U	ND< 299	U	ND< 299	U	ND< 319	U	ND< 297	U	ND< 298	U	ND< 326	U	ND< 348	U	ND< 1630	U	ND< 317	U	ND< 322	U	ND< 1570	U	ND< 320	U	ND< 324	U
Hexachloroethane		ND< 303	U	ND< 299	U	ND< 299	U	ND< 319	U	ND< 297	U	ND< 298	U	ND< 326	U	ND< 348	U	ND< 1630	U	ND< 317	U	ND< 322	U	ND< 1570	U	ND< 320	U	ND< 324	U
Indeno(1,2,3-C,D)Pyrene	**500**	372		ND< 299	U	ND< 299	U	333		ND< 297	U	ND< 298	U	500		358		**ND< 1630**	**U**	318		479		**ND< 1570**	**U**	414		**880**	
Isophorone		ND< 303	U	ND< 299	U	ND< 299	U	ND< 319	U	ND< 297	U	ND< 298	U	ND< 326	U	ND< 348	U	ND< 1630	U	ND< 317	U	ND< 322	U	ND< 1570	U	ND< 320	U	ND< 324	U
Naphthalene	100000	ND< 303	U	ND< 299	U	ND< 299	U	ND< 319	U	ND< 297	U	ND< 298	U	ND< 326	U	ND< 348	U	ND< 1630	U	ND< 317	U	ND< 322	U	ND< 1570	U	ND< 320	U	ND< 324	U
Nitrobenzene		ND< 303	U	ND< 299	U	ND< 299	U	ND< 319	U	ND< 297	U	ND< 298	U	ND< 326	U	ND< 348	U	ND< 1630	U	ND< 317	U	ND< 322	U	ND< 1570	U	ND< 320	U	ND< 324	U
N-Nitrosodi-N-Propylamine		ND< 303	U	ND< 299	U	ND< 299	U	ND< 319	U	ND< 297	U	ND< 298	U	ND< 326	U	ND< 348	U	ND< 1630	U	ND< 317	U	ND< 322	U	ND< 1570	U	ND< 320	U	ND< 324	U
N-Nitrosodiphenylamine		ND< 303	U	ND< 299	U	ND< 299	U	ND< 319	U	ND< 297	U	ND< 298	U	ND< 326	U	ND< 348	U	ND< 1630	U	ND< 317	U	ND< 322	U	ND< 1570	U	ND< 320	U	ND< 324	U
Pentachlorophenol	6700	ND< 606	U	ND< 598	U	ND< 597	U	ND< 638	U	ND< 594	U	ND< 597	U	ND< 653	U	ND< 695	U	ND< 3270	U	ND< 633	U	ND< 644	U	ND< 3150	U	ND< 640	U	ND< 649	U
Phenanthrene	100000	1410		ND< 299	U	ND< 299	U	390		ND< 297	U	3820		472		647		1310	J	325		583		4100		533		938	
Phenol	100000	ND< 303	U	ND< 299	U	ND< 299	U	ND< 319	U	ND< 297	U	ND< 298	U	ND< 326	U	ND< 348	U	ND< 1630	U	ND< 317	U	ND< 322	U	ND< 1570	U	ND< 320	U	ND< 324	U
Pyrene	100000	983	M	ND< 299	U	ND< 299	U	882		ND< 297	U	1280		920		799		1490	J	598		1180		1770		858		1570	

NOTES:

1. Soil sample analytical results are compared to the New York State Department of Environmental Conservation (NYSDEC) Title 6 of the official compilation of New York Codes, Rules, and Regulations (NYCRR) Part 375 Restricted Residential Soil Cleanup Objectives (RRSCOs).
2. RRSCO exceedances are in bold and highlighted yellow.
3. ND = Not Detected
4. Results shown as "ND" with Reporting Limits exceeding RRSCOs are in bold.
5. SVOCs = Semi-Volatile Organic Compounds
6. µg/kg = micrograms per kilogram.
7. Qualifier (Q) definitions are provided in the official lab reports.

TABLE 1B: Semi Volatile Organic Compounds (SVOCs) in Soil
AOC-1 - Power House and Former Coal Storage Area
Soil Sample Results (non-QA/QC)
Hudson River Psychiatric Center - North BCP Site, Poughkeepsie, NY
PVE Sheffler File #560909

	Date Sampled	5/8/2014		5/8/2014		5/8/2014		7/17/2014		7/17/2014		7/17/2014		7/17/2014		7/17/2014		7/17/2014		5/7/2014		5/8/2014		5/8/2014		5/7/2014		7/15/2014	
	Location	PH-5		PH-6		PH-6		PH-7		PH-7		PH-7		PH-8		PH-8		PH-8		PH-9		PH-9		PH-9		PH-10		PH-10	
	Sample ID	PH-5 6-7'		PH-6 1-2'		PH-6 4.5-5.5'		PH-7 0-2"		PH-7 1-2'		PH-7 4-4.75		PH-8 0-2"		PH-8 1-2'		PH-8 2.5-3.5'		PH-9 0-2"		PH-9 1-2'		PH-9 7-9'		PH-10 0-2"		PH-10 0-2"	
Analyte	RRSCOs	Result	Q	Result	Q	Result	Q	Result	Q	Result	Q	Result	Q	Result	Q	Result	Q	Result	Q	Result	Q	Result	Q	Result	Q	Result	Q	Result	Q
SVOCs (µg/kg)																													
1,2,4,5-Tetrachlorobenzene		ND< 337	U	ND< 333	U	ND< 352	U	ND< 632	U	ND< 328	U	ND< 322	U	ND< 305	U	ND< 321	U	ND< 326	U	ND< 324	U	ND< 320	U	ND< 339	U	ND< 326	U	ND< 339	U
1,2,4-Trichlorobenzene		ND< 337	U	ND< 333	U	ND< 352	U	ND< 632	U	ND< 328	U	ND< 322	U	ND< 305	U	ND< 321	U	ND< 326	U	ND< 324	U	ND< 320	U	ND< 339	U	ND< 326	U	ND< 339	U
1,2-Dichlorobenzene	100000	ND< 337	U	ND< 333	U	ND< 352	U	ND< 632	U	ND< 328	U	ND< 322	U	ND< 305	U	ND< 321	U	ND< 326	U	ND< 324	U	ND< 320	U	ND< 339	U	ND< 326	U	ND< 339	U
1,3-Dichlorobenzene	49000	ND< 337	U	ND< 333	U	ND< 352	U	ND< 632	U	ND< 328	U	ND< 322	U	ND< 305	U	ND< 321	U	ND< 326	U	ND< 324	U	ND< 320	U	ND< 339	U	ND< 326	U	ND< 339	U
1,4-Dichlorobenzene	13000	ND< 337	U	ND< 333	U	ND< 352	U	ND< 632	U	ND< 328	U	ND< 322	U	ND< 305	U	ND< 321	U	ND< 326	U	ND< 324	U	ND< 320	U	ND< 339	U	ND< 326	U	ND< 339	U
2,2-Oxybis(2-Chloropropane)		ND< 337	U	ND< 333	U	ND< 352	U	ND< 632	U	ND< 328	U	ND< 322	U	ND< 305	U	ND< 321	U	ND< 326	U	ND< 324	U	ND< 320	U	ND< 339	U	ND< 326	U	ND< 339	U
2,3,4,6-Tetrachlorophenol		ND< 337	U	ND< 333	U	ND< 352	U	ND< 632	U	ND< 328	U	ND< 322	U	ND< 305	U	ND< 321	U	ND< 326	U	ND< 324	U	ND< 320	U	ND< 339	U	ND< 326	U	ND< 339	U
2,4,5-Trichlorophenol		ND< 674	U	ND< 666	U	ND< 704	U	ND< 1260	U	ND< 656	U	ND< 644	U	ND< 610	U	ND< 642	U	ND< 652	U	ND< 648	U	ND< 640	U	ND< 677	U	ND< 653	U	ND< 679	U
2,4,6-Trichlorophenol		ND< 337	U	ND< 333	U	ND< 352	U	ND< 632	U	ND< 328	U	ND< 322	U	ND< 305	U	ND< 321	U	ND< 326	U	ND< 324	U	ND< 320	U	ND< 339	U	ND< 326	U	ND< 339	U
2,4-Dichlorophenol		ND< 337	U	ND< 333	U	ND< 352	U	ND< 632	U	ND< 328	U	ND< 322	U	ND< 305	U	ND< 321	U	ND< 326	U	ND< 324	U	ND< 320	U	ND< 339	U	ND< 326	U	ND< 339	U
2,4-Dimethylphenol		ND< 337	U	ND< 333	U	ND< 352	U	ND< 632	U	ND< 328	U	ND< 322	U	ND< 305	U	ND< 321	U	ND< 326	U	ND< 324	U	ND< 320	U	ND< 339	U	ND< 326	U	ND< 339	U
2,4-Dinitrophenol		ND< 674	U	ND< 666	U	ND< 704	U	ND< 1260	U	ND< 656	U	ND< 644	U	ND< 610	U	ND< 642	U	ND< 652	U	ND< 648	U	ND< 640	U	ND< 677	U	ND< 653	U	ND< 679	U
2,4-Dinitrotoluene		ND< 337	U	ND< 333	U	ND< 352	U	ND< 632	U	ND< 328	U	ND< 322	U	ND< 305	U	ND< 321	U	ND< 326	U	ND< 324	U	ND< 320	U	ND< 339	U	ND< 326	U	ND< 339	U
2,6-Dinitrotoluene		ND< 337	U	ND< 333	U	ND< 352	U	ND< 632	U	ND< 328	U	ND< 322	U	ND< 305	U	ND< 321	U	ND< 326	U	ND< 324	U	ND< 320	U	ND< 339	U	ND< 326	U	ND< 339	U
2-Chloronaphthalene		ND< 337	U	ND< 333	U	ND< 352	U	ND< 632	U	ND< 328	U	ND< 322	U	ND< 305	U	ND< 321	U	ND< 326	U	ND< 324	U	ND< 320	U	ND< 339	U	ND< 326	U	ND< 339	U
2-Chlorophenol		ND< 337	U	ND< 333	U	ND< 352	U	ND< 632	U	ND< 328	U	ND< 322	U	ND< 305	U	ND< 321	U	ND< 326	U	ND< 324	U	ND< 320	U	ND< 339	U	ND< 326	U	ND< 339	U
2-Methylnaphthalene		ND< 337	U	ND< 333	U	ND< 352	U	1140		ND< 328	U	ND< 322	U	ND< 305	U	ND< 321	U	ND< 326	U	ND< 324	U	ND< 320	U	ND< 339	U	ND< 326	U	ND< 339	U
2-Methylphenol (O-Cresol)	100000	ND< 337	U	ND< 333	U	ND< 352	U	ND< 632	U	ND< 328	U	ND< 322	U	ND< 305	U	ND< 321	U	ND< 326	U	ND< 324	U	ND< 320	U	ND< 339	U	ND< 326	U	ND< 339	U
2-Nitroaniline		ND< 674	U	ND< 666	U	ND< 704	U	ND< 1260	U	ND< 656	U	ND< 644	U	ND< 610	U	ND< 642	U	ND< 652	U	ND< 648	U	ND< 640	U	ND< 677	U	ND< 653	U	ND< 679	U
2-Nitrophenol		ND< 337	U	ND< 333	U	ND< 352	U	ND< 632	U	ND< 328	U	ND< 322	U	ND< 305	U	ND< 321	U	ND< 326	U	ND< 324	U	ND< 320	U	ND< 339	U	ND< 326	U	ND< 339	U
3,3'-Dichlorobenzidine		ND< 337	U	ND< 333	U	ND< 352	U	ND< 632	U	ND< 328	U	ND< 322	U	ND< 305	U	ND< 321	U	ND< 326	U	ND< 324	U	ND< 320	U	ND< 339	U	ND< 326	U	ND< 339	U
3-Methylphenol	100000	ND< 337	U	ND< 333	U	ND< 352	U	ND< 632	U	ND< 328	U	ND< 322	U	ND< 305	U	ND< 321	U	ND< 326	U	ND< 324	U	ND< 320	U	ND< 339	U	ND< 326	U	ND< 339	U
3-Nitroaniline		ND< 674	U	ND< 666	U	ND< 704	U	ND< 1260	U	ND< 656	U	ND< 644	U	ND< 610	U	ND< 642	U	ND< 652	U	ND< 648	U	ND< 640	U	ND< 677	U	ND< 653	U	ND< 679	U
4,6-Dinitro-2-Methylphenol		ND< 674	U	ND< 666	U	ND< 704	U	ND< 1260	U	ND< 656	U	ND< 644	U	ND< 610	U	ND< 642	U	ND< 652	U	ND< 648	U	ND< 640	U	ND< 677	U	ND< 653	U	ND< 679	U
4-Bromophenyl Phenyl Ether		ND< 337	U	ND< 333	U	ND< 352	U	ND< 632	U	ND< 328	U	ND< 322	U	ND< 305	U	ND< 321	U	ND< 326	U	ND< 324	U	ND< 320	U	ND< 339	U	ND< 326	U	ND< 339	U
4-Chloro-3-Methylphenol		ND< 337	U	ND< 333	U	ND< 352	U	ND< 632	U	ND< 328	U	ND< 322	U	ND< 305	U	ND< 321	U	ND< 326	U	ND< 324	U	ND< 320	U	ND< 339	U	ND< 326	U	ND< 339	U
4-Chloroaniline		ND< 337	U	ND< 333	U	ND< 352	U	ND< 632	U	ND< 328	U	ND< 322	U	ND< 305	U	ND< 321	U	ND< 326	U	ND< 324	U	ND< 320	U	ND< 339	U	ND< 326	U	ND< 339	U
4-Chlorophenyl Phenyl Ether		ND< 337	U	ND< 333	U	ND< 352	U	ND< 632	U	ND< 328	U	ND< 322	U	ND< 305	U	ND< 321	U	ND< 326	U	ND< 324	U	ND< 320	U	ND< 339	U	ND< 326	U	ND< 339	U
4-Nitroaniline		ND< 674	U	ND< 666	U	ND< 704	U	ND< 1260	U	ND< 656	U	ND< 644	U	ND< 610	U	ND< 642	U	ND< 652	U	ND< 648	U	ND< 640	U	ND< 677	U	ND< 653	U	ND< 679	U
4-Nitrophenol		ND< 674	U	ND< 666	U	ND< 704	U	ND< 1260	U	ND< 656	U	ND< 644	U	ND< 610	U	ND< 642	U	ND< 652	U	ND< 648	U	ND< 640	U	ND< 677	U	ND< 653	U	ND< 679	U
Acenaphthene	100000	ND< 337	U	ND< 333	U	ND< 352	U	2250		ND< 328	U	185	J	ND< 305	U	ND< 321	U	ND< 326	U	ND< 324	U	ND< 320	U	ND< 339	U	ND< 326	U	ND< 339	U
Acenaphthylene	100000	ND< 337	U	ND< 333	U	ND< 352	U	ND< 632	U	ND< 328	U	ND< 322	U	ND< 305	U	ND< 321	U	ND< 326	U	ND< 324	U	ND< 320	U	ND< 339	U	ND< 326	U	382	
Acetophenone		ND< 337	U	ND< 333	U	ND< 352	U	ND< 632	U	ND< 328	U	ND< 322	U	ND< 305	U	ND< 321	U	ND< 326	U	ND< 324	U	ND< 320	U	ND< 339	U	ND< 326	U	ND< 339	U
Anthracene	100000	463		ND< 333	U	ND< 352	U	3250		ND< 328	U	336		ND< 305	U	ND< 321	U	ND< 326	U	ND< 324	U	ND< 320	U	ND< 339	U	ND< 326	U	431	
Atrazine		ND< 337	U	ND< 333	U	ND< 352	U	ND< 632	U	ND< 328	U	ND< 322	U	ND< 305	U	ND< 321	U	ND< 326	U	ND< 324	U	ND< 320	U	ND< 339	U	ND< 326	U	ND< 339	U
Benzaldehyde		ND< 337	U	ND< 333	U	ND< 352	U	ND< 632	U	ND< 328	U	ND< 322	U	ND< 305	U	ND< 321	U	ND< 326	U	ND< 324	U	ND< 320	U	ND< 339	U	ND< 326	U	ND< 339	U
Benzo(A)Anthracene	**1000**	751		ND< 333	U	ND< 352	U	**4040**		ND< 328	U	456		ND< 305	U	ND< 321	U	ND< 326	U	ND< 324	U	ND< 320	U	ND< 339	U	ND< 326	U	656	
Benzo(A)Pyrene	**1000**	583		ND< 333	U	ND< 352	U	**3510**		ND< 328	U	381		ND< 305	U	ND< 321	U	ND< 326	U	ND< 324	U	ND< 320	U	ND< 339	U	ND< 326	U	814	
Benzo(B)Fluoranthene	**1000**	459		ND< 333	U	ND< 352	U	**3840**		ND< 328	U	412		ND< 305	U	ND< 321	U	ND< 326	U	ND< 324	U	ND< 320	U	ND< 339	U	ND< 326	U	660	
Benzo(G,H,I)Perylene	100000	331	J	ND< 333	U	ND< 352	U	1820		ND< 328	U	203	J	ND< 305	U	ND< 321	U	ND< 326	U	ND< 324	U	ND< 320	U	ND< 339	U	ND< 326	U	535	
Benzo(K)Fluoranthene	**3900**	515		ND< 333	U	ND< 352	U	1910		ND< 328	U	205	J	ND< 305	U	ND< 321	U	ND< 326	U	ND< 324	U	ND< 320	U	ND< 339	U	ND< 326	U	712	
Benzyl Butyl Phthalate		ND< 337	U	ND< 333	U	ND< 352	U	ND< 632	U	ND< 328	U	ND< 322	U	ND< 305	U	ND< 321	U	ND< 326	U	ND< 324	U	ND< 320	U	ND< 339	U	ND< 326	U	ND< 339	U
Biphenyl (Diphenyl)		ND< 337	U	ND< 333	U	ND< 352	U	336	J	ND< 328	U	ND< 322	U	ND< 305	U	ND< 321	U	ND< 326	U	ND< 324	U	ND< 320	U	ND< 339	U	ND< 326	U	ND< 339	U
Bis(2-Chloroethoxy) Methane		ND< 337	U	ND< 333	U	ND< 352	U	ND< 632	U	ND< 328	U	ND< 322	U	ND< 305	U	ND< 321	U	ND< 326	U	ND< 324	U	ND< 320	U	ND< 339	U	ND< 326	U	ND< 339	U
Bis(2-Chloroethyl) Ether (2-Chloroethyl Ether)		ND< 337	U	ND< 333	U	ND< 352	U	ND< 632	U	ND< 328	U	ND< 322	U	ND< 305	U	ND< 321	U	ND< 326	U	ND< 324	U	ND< 320	U	ND< 339	U	ND< 326	U	ND< 339	U
Bis(2-Ethylhexyl) Phthalate		ND< 337	U	ND< 333	U	ND< 352	U	ND< 632	U	ND< 328	U	ND< 322	U	ND< 305	U	ND< 321	U	ND< 326	U	ND< 324	U	ND< 320	U	ND< 339	U	ND< 326	U	ND< 339	U
Caprolactam		ND< 337	U	ND< 333	U	ND< 352	U	ND< 632	U	ND< 328	U	ND< 322	U	ND< 305	U	ND< 321	U	ND< 326	U	ND< 324	U	ND< 320	U	ND< 339	U	ND< 326	U	ND< 339	U
Carbazole		ND< 337	U	ND< 333	U	ND< 352	U	1350		ND< 328	U	ND< 322	U	ND< 305	U	ND< 321	U	ND< 326	U	ND< 324	U	ND< 320	U	ND< 339	U	ND< 326	U	224	J
Chrysene	**3900**	855		ND< 333	U	ND< 352	U	3680		ND< 328	U	423		ND< 305	U	ND< 321	U	ND< 326	U	ND< 324	U	ND< 320	U	ND< 339	U	181	J	719	
Dibenz(A,H)Anthracene	**330**	**ND< 337**	**U**	**ND< 333**	**U**	**ND< 352**	**U**	**645**		ND< 328	U	ND< 322	U	ND< 305	U	ND< 321	U	ND< 326	U	ND< 324	U	ND< 320	U	**ND< 339**	**U**	ND< 326	U	**ND< 339**	**U**
Dibenzofuran	59000	ND< 337	U	ND< 333	U	ND< 352	U	1640		ND< 328	U	ND< 322	U	ND< 305	U	ND< 321	U	ND< 326	U	ND< 324	U	ND< 320	U	ND< 339	U	ND< 326	U	ND< 339	U
Diethyl Phthalate		ND< 337	U	ND< 333	U	ND< 352	U	ND< 632	U	ND< 328	U	ND< 322	U	ND< 305	U	ND< 321	U	ND< 326	U	ND< 324	U	ND< 320	U	ND< 339	U	ND< 326	U	ND< 339	U
Dimethyl Phthalate		ND< 674	U	ND< 666	U	ND< 704	U	ND< 1260	U	ND< 656	U	ND< 644	U	ND< 610	U	ND< 642	U	ND< 652	U	ND< 648	U	ND< 640	U	ND< 677	U	ND< 653	U	ND< 679	U
Di-N-Butyl Phthalate		ND< 337	U	ND< 333	U	ND< 352	U	ND< 632	U	ND< 328	U	ND< 322	U	ND< 305	U	ND< 321	U	ND< 326	U	ND< 324	U	ND< 320	U	ND< 339	U	ND< 326	U	ND< 339	U
Di-N-Octylphthalate		ND< 337	U	ND< 333	U	ND< 352	U	ND< 632	U	ND< 328	U	ND< 322	U	ND< 305	U	ND< 321	U	ND< 326	U	ND< 324	U	ND< 320	U	ND< 339	U	ND< 326	U	ND< 339	U
Fluoranthene	100000	1710		ND< 333	U	ND< 352	U	8680		ND< 328	U	1000		ND< 305	U	ND< 321	U	ND< 326	U	250	J	ND< 320	U	ND< 339	U	290	J	1300	
Fluorene	100000	ND< 337	U	ND< 333	U	ND< 352	U	2490		ND< 328	U	217	J	ND< 305	U	ND< 321	U	ND< 326	U	ND< 324	U	ND< 320	U	ND< 339	U	ND< 326	U	ND< 339	U
Hexachlorobenzene	**1200**	ND< 337	U	ND< 333	U	ND< 352	U	ND< 632	U	ND< 328	U	ND< 322	U	ND< 305	U	ND< 321	U	ND< 326	U	ND< 324	U	ND< 320	U	ND< 339	U	ND< 326	U	ND< 339	U
Hexachlorobutadiene		ND< 337	U	ND< 333	U	ND< 352	U	ND< 632	U	ND< 328	U	ND< 322	U	ND< 305	U	ND< 321	U	ND< 326	U	ND< 324	U	ND< 320	U	ND< 339	U	ND< 326	U	ND< 339	U
Hexachlorocyclopentadiene		ND< 337	U	ND< 333	U	ND< 352	U	ND< 632	U	ND< 328	U	ND< 322	U	ND< 305	U	ND< 321	U	ND< 326	U	ND< 324	U	ND< 320	U	ND< 339	U	ND< 326	U	ND< 339	U
Hexachloroethane		ND< 337	U	ND< 333	U	ND< 352	U	ND< 632	U	ND< 328	U	ND< 322	U	ND< 305	U	ND< 321	U	ND< 326	U	ND< 324	U	ND< 320	U	ND< 339	U	ND< 326	U	ND< 339	U
Indeno(1,2,3-C,D)Pyrene	**500**	**510**		ND< 333	U	ND< 352	U	**2710**		ND< 328	U	275	J	ND< 305	U	ND< 321	U	ND< 326	U	ND< 324	U	ND< 320	U	ND< 339	U	ND< 326	U	**726**	
Isophorone		ND< 337	U	ND< 333	U	ND< 352	U	ND< 632	U	ND< 328	U	ND< 322	U	ND< 305	U	ND< 321	U	ND< 326	U	ND< 324	U	ND< 320	U	ND< 339	U	ND< 326	U	ND< 339	U
Naphthalene	100000	ND< 337	U	ND< 333	U	ND< 352	U	3520		ND< 328	U	ND< 322	U	ND< 305	U	ND< 321	U	ND< 326	U	ND< 324	U	ND< 320	U	ND< 339	U	ND< 326	U	ND< 339	U
Nitrobenzene		ND< 337	U	ND< 333	U	ND< 352	U	ND< 632	U	ND< 328	U	ND< 322	U	ND< 305	U	ND< 321	U	ND< 326	U	ND< 324	U	ND< 320	U	ND< 339	U	ND< 326	U	ND< 339	U
N-Nitrosodi-N-Propylamine		ND< 337	U	ND< 333	U	ND< 352	U	ND< 632	U	ND< 328	U	ND< 322	U	ND< 305	U	ND< 321	U	ND< 326	U	ND< 324	U	ND< 320	U	ND< 339	U	ND< 326	U	ND< 339	U
N-Nitrosodiphenylamine		ND< 337	U	ND< 333	U	ND< 352	U	ND< 632	U	ND< 328	U	ND< 322	U	ND< 305	U	ND< 321	U	ND< 326	U	ND< 324	U	ND< 320	U	ND< 339	U	ND< 326	U	ND< 339	U
Pentachlorophenol	6700	ND< 674	U	ND< 666	U	ND< 704	U	ND< 1260	U	ND< 656	U	ND< 644	U	ND< 610	U	ND< 642	U	ND< 652	U	ND< 648	U	ND< 640	U	ND< 677	U	ND< 653	U	ND< 679	U
Phenanthrene	100000	1300		ND< 333	U	ND< 352	U	9680		ND< 328	U	1060		ND< 305	U	ND< 321	U	ND< 326	U	ND< 324	U	ND< 320	U	ND< 339	U	ND< 326	U	1110	
Phenol	100000	ND< 337	U	ND< 333	U	ND< 352	U	ND< 632	U	ND< 328	U	ND< 322	U	ND< 305	U	ND< 321	U	ND< 326	U	ND< 324	U	ND< 320	U	ND< 339	U	ND< 326	U	ND< 339	U
Pyrene	100000	1530		ND< 333	U	ND< 352	U	6510		ND< 328	U	753		ND< 305	U	ND< 321	U	ND< 326	U	204	J	ND< 320	U	ND< 339	U	236	J	1040	

NOTES:

1. Soil sample analytical results are compared to the New York State Department of Environmental Conservation (NYSDEC) Title 6 of the official compilation of New York Codes, Rules, and Regulations (NYCRR) Part 375 Restricted Residential Soil Cleanup Objectives (RRSCOs).
2. RRSCO exceedances are in bold and highlighted yellow.
3. ND = Not Detected
4. Results shown as "ND" with Reporting Limits exceeding RRSCOs are in bold.
5. SVOCs = Semi-Volatile Organic Compounds
6. µg/kg = micrograms per kilogram.
7. Qualifier (Q) definitions are provided in the official lab reports.

TABLE 1B: Semi Volatile Organic Compounds (SVOCs) in Soil
AOC-1 - Power House and Former Coal Storage Area
Soil Sample Results (non-QA/QC)
Hudson River Psychiatric Center - North BCP Site, Poughkeepsie, NY
PVE Sheffler File #560909

	Date Sampled	7/15/2014		7/15/2014		5/7/2014		5/12/2014		5/12/2014		5/7/2014		5/12/2014		7/15/2014		7/15/2014		7/15/2014		7/15/2014		7/15/2014		7/15/2014		7/15/2014	
	Location	PH-10		PH-10		PH-11		PH-11		PH-11		PH-12		PH-12		PH-14		PH-14		PH-14		PH-15		PH-15		PH-15		PH-16	
	Sample ID	PH-10 1-2'		PH-10 12.5-14'		PH-11 0-2"		PH-11 1-2'		PH-11 9-10.75'		PH-12 0-2"		PH-12 1-2'		PH-14 0-2"		PH-14 1-2'		PH-14 9-11		PH-15 0-2"		PH-15 1-2'		PH-15 10-12		PH-16 0-2"	
Analyte	RRSCOs	Result	Q	Result	Q	Result	Q	Result	Q	Result	Q	Result	Q	Result	Q	Result	Q	Result	Q	Result	Q	Result	Q	Result	Q	Result	Q	Result	Q
SVOCs (µg/kg)																													
1,2,4,5-Tetrachlorobenzene		ND< 332	U	ND< 294	U	ND< 335	U	ND< 1630	U	ND< 3130	U	ND< 292	U	ND< 384	U	ND< 332	U	ND< 331	U	ND< 310	U	ND< 313	U	ND< 311	U	ND< 309	U	ND< 326	U
1,2,4-Trichlorobenzene		ND< 332	U	ND< 294	U	ND< 335	U	ND< 1630	U	ND< 3130	U	ND< 292	U	ND< 384	U	ND< 332	U	ND< 331	U	ND< 310	U	ND< 313	U	ND< 311	U	ND< 309	U	ND< 326	U
1,2-Dichlorobenzene	100000	ND< 332	U	ND< 294	U	ND< 335	U	ND< 1630	U	ND< 3130	U	ND< 292	U	ND< 384	U	ND< 332	U	ND< 331	U	ND< 310	U	ND< 313	U	ND< 311	U	ND< 309	U	ND< 326	U
1,3-Dichlorobenzene	49000	ND< 332	U	ND< 294	U	ND< 335	U	ND< 1630	U	ND< 3130	U	ND< 292	U	ND< 384	U	ND< 332	U	ND< 331	U	ND< 310	U	ND< 313	U	ND< 311	U	ND< 309	U	ND< 326	U
1,4-Dichlorobenzene	13000	ND< 332	U	ND< 294	U	ND< 335	U	ND< 1630	U	ND< 3130	U	ND< 292	U	ND< 384	U	ND< 332	U	ND< 331	U	ND< 310	U	ND< 313	U	ND< 311	U	ND< 309	U	ND< 326	U
2,2-Oxybis(2-Chloropropane)		ND< 332	U	ND< 294	U	ND< 335	U	ND< 1630	U	ND< 3130	U	ND< 292	U	ND< 384	U	ND< 332	U	ND< 331	U	ND< 310	U	ND< 313	U	ND< 311	U	ND< 309	U	ND< 326	U
2,3,4,6-Tetrachlorophenol		ND< 332	U	ND< 294	U	ND< 335	U	ND< 1630	U	ND< 3130	U	ND< 292	U	ND< 384	U	ND< 332	U	ND< 331	U	ND< 310	U	ND< 313	U	ND< 311	U	ND< 309	U	ND< 326	U
2,4,5-Trichlorophenol		ND< 664	U	ND< 588	U	ND< 671	U	ND< 3260	U	ND< 6260	U	ND< 584	U	ND< 768	U	ND< 664	U	ND< 662	U	ND< 621	U	ND< 627	U	ND< 622	U	ND< 617	U	ND< 651	U
2,4,6-Trichlorophenol		ND< 332	U	ND< 294	U	ND< 335	U	ND< 1630	U	ND< 3130	U	ND< 292	U	ND< 384	U	ND< 332	U	ND< 331	U	ND< 310	U	ND< 313	U	ND< 311	U	ND< 309	U	ND< 326	U
2,4-Dichlorophenol		ND< 332	U	ND< 294	U	ND< 335	U	ND< 1630	U	ND< 3130	U	ND< 292	U	ND< 384	U	ND< 332	U	ND< 331	U	ND< 310	U	ND< 313	U	ND< 311	U	ND< 309	U	ND< 326	U
2,4-Dimethylphenol		ND< 332	U	ND< 294	U	ND< 335	U	ND< 1630	U	ND< 3130	U	ND< 292	U	ND< 384	U	ND< 332	U	ND< 331	U	ND< 310	U	ND< 313	U	ND< 311	U	ND< 309	U	ND< 326	U
2,4-Dinitrophenol		ND< 664	U	ND< 588	U	ND< 671	U	ND< 3260	U	ND< 6260	U	ND< 584	U	ND< 768	U	ND< 664	U	ND< 662	U	ND< 621	U	ND< 627	U	ND< 622	U	ND< 617	U	ND< 651	U
2,4-Dinitrotoluene		ND< 332	U	ND< 294	U	ND< 335	U	ND< 1630	U	ND< 3130	U	ND< 292	U	ND< 384	U	ND< 332	U	ND< 331	U	ND< 310	U	ND< 313	U	ND< 311	U	ND< 309	U	ND< 326	U
2,6-Dinitrotoluene		ND< 332	U	ND< 294	U	ND< 335	U	ND< 1630	U	ND< 3130	U	ND< 292	U	ND< 384	U	ND< 332	U	ND< 331	U	ND< 310	U	ND< 313	U	ND< 311	U	ND< 309	U	ND< 326	U
2-Chloronaphthalene		ND< 332	U	ND< 294	U	ND< 335	U	ND< 1630	U	ND< 3130	U	ND< 292	U	ND< 384	U	ND< 332	U	ND< 331	U	ND< 310	U	ND< 313	U	ND< 311	U	ND< 309	U	ND< 326	U
2-Chlorophenol		ND< 332	U	ND< 294	U	ND< 335	U	ND< 1630	U	ND< 3130	U	ND< 292	U	ND< 384	U	ND< 332	U	ND< 331	U	ND< 310	U	ND< 313	U	ND< 311	U	ND< 309	U	ND< 326	U
2-Methylnaphthalene		ND< 332	U	ND< 294	U	ND< 335	U	ND< 1630	U	2520	J	ND< 292	U	ND< 384	U	ND< 332	U	ND< 331	U	ND< 310	U	ND< 313	U	ND< 311	U	ND< 309	U	ND< 326	U
2-Methylphenol (O-Cresol)	100000	ND< 332	U	ND< 294	U	ND< 335	U	ND< 1630	U	ND< 3130	U	ND< 292	U	ND< 384	U	ND< 332	U	ND< 331	U	ND< 310	U	ND< 313	U	ND< 311	U	ND< 309	U	ND< 326	U
2-Nitroaniline		ND< 664	U	ND< 588	U	ND< 671	U	ND< 3260	U	ND< 6260	U	ND< 584	U	ND< 768	U	ND< 664	U	ND< 662	U	ND< 621	U	ND< 627	U	ND< 622	U	ND< 617	U	ND< 651	U
2-Nitrophenol		ND< 332	U	ND< 294	U	ND< 335	U	ND< 1630	U	ND< 3130	U	ND< 292	U	ND< 384	U	ND< 332	U	ND< 331	U	ND< 310	U	ND< 313	U	ND< 311	U	ND< 309	U	ND< 326	U
3,3'-Dichlorobenzidine		ND< 332	U	ND< 294	U	ND< 335	U	ND< 1630	U	ND< 3130	U	ND< 292	U	ND< 384	U	ND< 332	U	ND< 331	U	ND< 310	U	ND< 313	U	ND< 311	U	ND< 309	U	ND< 326	U
3-Methylphenol	100000	ND< 332	U	ND< 294	U	ND< 335	U	ND< 1630	U	ND< 3130	U	ND< 292	U	ND< 384	U	ND< 332	U	ND< 331	U	ND< 310	U	ND< 313	U	ND< 311	U	ND< 309	U	ND< 326	U
3-Nitroaniline		ND< 664	U	ND< 588	U	ND< 671	U	ND< 3260	U	ND< 6260	U	ND< 584	U	ND< 768	U	ND< 664	U	ND< 662	U	ND< 621	U	ND< 627	U	ND< 622	U	ND< 617	U	ND< 651	U
4,6-Dinitro-2-Methylphenol		ND< 664	U	ND< 588	U	ND< 671	U	ND< 3260	U	ND< 6260	U	ND< 584	U	ND< 768	U	ND< 664	U	ND< 662	U	ND< 621	U	ND< 627	U	ND< 622	U	ND< 617	U	ND< 651	U
4-Bromophenyl Phenyl Ether		ND< 332	U	ND< 294	U	ND< 335	U	ND< 1630	U	ND< 3130	U	ND< 292	U	ND< 384	U	ND< 332	U	ND< 331	U	ND< 310	U	ND< 313	U	ND< 311	U	ND< 309	U	ND< 326	U
4-Chloro-3-Methylphenol		ND< 332	U	ND< 294	U	ND< 335	U	ND< 1630	U	ND< 3130	U	ND< 292	U	ND< 384	U	ND< 332	U	ND< 331	U	ND< 310	U	ND< 313	U	ND< 311	U	ND< 309	U	ND< 326	U
4-Chloroaniline		ND< 332	U	ND< 294	U	ND< 335	U	ND< 1630	U	ND< 3130	U	ND< 292	U	ND< 384	U	ND< 332	U	ND< 331	U	ND< 310	U	ND< 313	U	ND< 311	U	ND< 309	U	ND< 326	U
4-Chlorophenyl Phenyl Ether		ND< 332	U	ND< 294	U	ND< 335	U	ND< 1630	U	ND< 3130	U	ND< 292	U	ND< 384	U	ND< 332	U	ND< 331	U	ND< 310	U	ND< 313	U	ND< 311	U	ND< 309	U	ND< 326	U
4-Nitroaniline		ND< 664	U	ND< 588	U	ND< 671	U	ND< 3260	U	ND< 6260	U	ND< 584	U	ND< 768	U	ND< 664	U	ND< 662	U	ND< 621	U	ND< 627	U	ND< 622	U	ND< 617	U	ND< 651	U
4-Nitrophenol		ND< 664	U	ND< 588	U	ND< 671	U	ND< 3260	U	ND< 6260	U	ND< 584	U	ND< 768	U	ND< 664	U	ND< 662	U	ND< 621	U	ND< 627	U	ND< 622	U	ND< 617	U	ND< 651	U
Acenaphthene	100000	ND< 332	U	ND< 294	U	ND< 335	U	ND< 1630	U	ND< 3130	U	ND< 292	U	ND< 384	U	ND< 332	U	ND< 331	U	ND< 310	U	ND< 313	U	ND< 311	U	ND< 309	U	ND< 326	U
Acenaphthylene	100000	ND< 332	U	ND< 294	U	288	J	ND< 1630	U	ND< 3130	U	ND< 292	U	ND< 384	U	ND< 332	U	ND< 331	U	ND< 310	U	ND< 313	U	ND< 311	U	ND< 309	U	ND< 326	U
Acetophenone		ND< 332	U	ND< 294	U	ND< 335	U	ND< 1630	U	ND< 3130	U	ND< 292	U	ND< 384	U	ND< 332	U	ND< 331	U	ND< 310	U	ND< 313	U	ND< 311	U	ND< 309	U	ND< 326	U
Anthracene	100000	ND< 332	U	ND< 294	U	334	J	ND< 1630	U	ND< 3130	U	ND< 292	U	ND< 384	U	ND< 332	U	ND< 331	U	ND< 310	U	ND< 313	U	ND< 311	U	ND< 309	U	ND< 326	U
Atrazine		ND< 332	U	ND< 294	U	ND< 335	U	ND< 1630	U	ND< 3130	U	ND< 292	U	ND< 384	U	ND< 332	U	ND< 331	U	ND< 310	U	ND< 313	U	ND< 311	U	ND< 309	U	ND< 326	U
Benzaldehyde		ND< 332	U	ND< 294	U	ND< 335	U	ND< 1630	U	ND< 3130	U	ND< 292	U	ND< 384	U	ND< 332	U	ND< 331	U	ND< 310	U	ND< 313	U	ND< 311	U	ND< 309	U	ND< 326	U
Benzo(A)Anthracene	**1000**	ND< 332	U	ND< 294	U	537		**ND< 1630**	**U**	**2210**	**J**	ND< 292	U	ND< 384	U	301	J	ND< 331	U	ND< 310	U	ND< 313	U	ND< 311	U	ND< 309	U	ND< 326	U
Benzo(A)Pyrene	**1000**	ND< 332	U	ND< 294	U	625		**ND< 1630**	**U**	**ND< 3130**	**U**	ND< 292	U	ND< 384	U	240	J	ND< 331	U	ND< 310	U	ND< 313	U	ND< 311	U	ND< 309	U	ND< 326	U
Benzo(B)Fluoranthene	**1000**	ND< 332	U	ND< 294	U	674		**ND< 1630**	**U**	**ND< 3130**	**U**	ND< 292	U	ND< 384	U	278	J	ND< 331	U	ND< 310	U	ND< 313	U	ND< 311	U	ND< 309	U	ND< 326	U
Benzo(G,H,I)Perylene	100000	ND< 332	U	ND< 294	U	401		ND< 1630	U	ND< 3130	U	ND< 292	U	ND< 384	U	ND< 332	U	ND< 331	U	ND< 310	U	ND< 313	U	ND< 311	U	ND< 309	U	ND< 326	U
Benzo(K)Fluoranthene	**3900**	ND< 332	U	ND< 294	U	322	J	ND< 1630	U	ND< 3130	U	ND< 292	U	ND< 384	U	317	J	ND< 331	U	ND< 310	U	ND< 313	U	ND< 311	U	ND< 309	U	ND< 326	U
Benzyl Butyl Phthalate		ND< 332	U	ND< 294	U	ND< 335	U	ND< 1630	U	ND< 3130	U	ND< 292	U	ND< 384	U	ND< 332	U	ND< 331	U	ND< 310	U	ND< 313	U	ND< 311	U	ND< 309	U	ND< 326	U
Biphenyl (Diphenyl)		ND< 332	U	ND< 294	U	ND< 335	U	ND< 1630	U	ND< 3130	U	ND< 292	U	ND< 384	U	ND< 332	U	ND< 331	U	ND< 310	U	ND< 313	U	ND< 311	U	ND< 309	U	ND< 326	U
Bis(2-Chloroethoxy) Methane		ND< 332	U	ND< 294	U	ND< 335	U	ND< 1630	U	ND< 3130	U	ND< 292	U	ND< 384	U	ND< 332	U	ND< 331	U	ND< 310	U	ND< 313	U	ND< 311	U	ND< 309	U	ND< 326	U
Bis(2-Chloroethyl) Ether (2-Chloroethyl Ether)		ND< 332	U	ND< 294	U	ND< 335	U	ND< 1630	U	ND< 3130	U	ND< 292	U	ND< 384	U	ND< 332	U	ND< 331	U	ND< 310	U	ND< 313	U	ND< 311	U	ND< 309	U	ND< 326	U
Bis(2-Ethylhexyl) Phthalate		ND< 332	U	ND< 294	U	ND< 335	U	ND< 1630	U	ND< 3130	U	ND< 292	U	ND< 384	U	ND< 332	U	ND< 331	U	ND< 310	U	ND< 313	U	ND< 311	U	ND< 309	U	ND< 326	U
Caprolactam		ND< 332	U	ND< 294	U	ND< 335	U	ND< 1630	U	ND< 3130	U	ND< 292	U	ND< 384	U	ND< 332	U	ND< 331	U	ND< 310	U	ND< 313	U	ND< 311	U	ND< 309	U	ND< 326	U
Carbazole		ND< 332	U	ND< 294	U	ND< 335	U	ND< 1630	U	ND< 3130	U	ND< 292	U	ND< 384	U	ND< 332	U	ND< 331	U	ND< 310	U	ND< 313	U	ND< 311	U	ND< 309	U	ND< 326	U
Chrysene	**3900**	ND< 332	U	ND< 294	U	609		ND< 1630	U	**5030**		ND< 292	U	ND< 384	U	366		ND< 331	U	ND< 310	U	ND< 313	U	ND< 311	U	ND< 309	U	ND< 326	U
Dibenz(A,H)Anthracene	**330**	**ND< 332**	**U**	ND< 294	U	**ND< 335**	**U**	**ND< 1630**	**U**	**ND< 3130**	**U**	ND< 292	U	**ND< 384**	**U**	**ND< 332**	**U**	**ND< 331**	**U**	ND< 310	U	ND< 313	U	ND< 311	U	ND< 309	U	ND< 326	U
Dibenzofuran	59000	ND< 332	U	ND< 294	U	ND< 335	U	ND< 1630	U	ND< 3130	U	ND< 292	U	ND< 384	U	ND< 332	U	ND< 331	U	ND< 310	U	ND< 313	U	ND< 311	U	ND< 309	U	ND< 326	U
Diethyl Phthalate		ND< 332	U	ND< 294	U	ND< 335	U	ND< 1630	U	ND< 3130	U	ND< 292	U	ND< 384	U	ND< 332	U	ND< 331	U	ND< 310	U	ND< 313	U	ND< 311	U	ND< 309	U	ND< 326	U
Dimethyl Phthalate		ND< 664	U	ND< 588	U	ND< 671	U	ND< 3260	U	ND< 6260	U	ND< 584	U	ND< 768	U	ND< 664	U	ND< 662	U	ND< 621	U	ND< 627	U	ND< 622	U	ND< 617	U	ND< 651	U
Di-N-Butyl Phthalate		ND< 332	U	ND< 294	U	ND< 335	U	ND< 1630	U	ND< 3130	U	ND< 292	U	ND< 384	U	ND< 332	U	ND< 331	U	ND< 310	U	ND< 313	U	ND< 311	U	ND< 309	U	ND< 326	U
Di-N-Octylphthalate		ND< 332	U	ND< 294	U	ND< 335	U	ND< 1630	U	ND< 3130	U	ND< 292	U	ND< 384	U	ND< 332	U	ND< 331	U	ND< 310	U	ND< 313	U	ND< 311	U	ND< 309	U	ND< 326	U
Fluoranthene	100000	171	J	ND< 294	U	1060		1350	J	1870	J	ND< 292	U	ND< 384	U	565		ND< 331	U	ND< 310	U	ND< 313	U	190	J	ND< 309	U	ND< 326	U
Fluorene	100000	ND< 332	U	ND< 294	U	ND< 335	U	ND< 1630	U	ND< 3130	U	ND< 292	U	ND< 384	U	ND< 332	U	ND< 331	U	ND< 310	U	ND< 313	U	ND< 311	U	ND< 309	U	ND< 326	U
Hexachlorobenzene	**1200**	ND< 332	U	ND< 294	U	ND< 335	U	**ND< 1630**	**U**	**ND< 3130**	**U**	ND< 292	U	ND< 384	U	ND< 332	U	ND< 331	U	ND< 310	U	ND< 313	U	ND< 311	U	ND< 309	U	ND< 326	U
Hexachlorobutadiene		ND< 332	U	ND< 294	U	ND< 335	U	ND< 1630	U	ND< 3130	U	ND< 292	U	ND< 384	U	ND< 332	U	ND< 331	U	ND< 310	U	ND< 313	U	ND< 311	U	ND< 309	U	ND< 326	U
Hexachlorocyclopentadiene		ND< 332	U	ND< 294	U	ND< 335	U	ND< 1630	U	ND< 3130	U	ND< 292	U	ND< 384	U	ND< 332	U	ND< 331	U	ND< 310	U	ND< 313	U	ND< 311	U	ND< 309	U	ND< 326	U
Hexachloroethane		ND< 332	U	ND< 294	U	ND< 335	U	ND< 1630	U	ND< 3130	U	ND< 292	U	ND< 384	U	ND< 332	U	ND< 331	U	ND< 310	U	ND< 313	U	ND< 311	U	ND< 309	U	ND< 326	U
Indeno(1,2,3-C,D)Pyrene	**500**	ND< 332	U	ND< 294	U	451		**ND< 1630**	**U**	**ND< 3130**	**U**	ND< 292	U	ND< 384	U	198	J	ND< 331	U	ND< 310	U	ND< 313	U	ND< 311	U	ND< 309	U	ND< 326	U
Isophorone		ND< 332	U	ND< 294	U	ND< 335	U	ND< 1630	U	ND< 3130	U	ND< 292	U	ND< 384	U	ND< 332	U	ND< 331	U	ND< 310	U	ND< 313	U	ND< 311	U	ND< 309	U	ND< 326	U
Naphthalene	100000	ND< 332	U	ND< 294	U	ND< 335	U	ND< 1630	U	ND< 3130	U	ND< 292	U	ND< 384	U	ND< 332	U	ND< 331	U	ND< 310	U	ND< 313	U	ND< 311	U	ND< 309	U	ND< 326	U
Nitrobenzene		ND< 332	U	ND< 294	U	ND< 335	U	ND< 1630	U	ND< 3130	U	ND< 292	U	ND< 384	U	ND< 332	U	ND< 331	U	ND< 310	U	ND< 313	U	ND< 311	U	ND< 309	U	ND< 326	U
N-Nitrosodi-N-Propylamine		ND< 332	U	ND< 294	U	ND< 335	U	ND< 1630	U	ND< 3130	U	ND< 292	U	ND< 384	U	ND< 332	U	ND< 331	U	ND< 310	U	ND< 313	U	ND< 311	U	ND< 309	U	ND< 326	U
N-Nitrosodiphenylamine		ND< 332	U	ND< 294	U	ND< 335	U	ND< 1630	U	ND< 3130	U	ND< 292	U	ND< 384	U	ND< 332	U	ND< 331	U	ND< 310	U	ND< 313	U	ND< 311	U	ND< 309	U	ND< 326	U
Pentachlorophenol	6700	ND< 664	U	ND< 588	U	ND< 671	U	ND< 3260	U	ND< 6260	U	ND< 584	U	ND< 768	U	ND< 664	U	ND< 662	U	ND< 621	U	ND< 627	U	ND< 622	U	ND< 617	U	ND< 651	U
Phenanthrene	100000	ND< 332	U	ND< 294	U	527		ND< 1630	U	8110		ND< 292	U	ND< 384	U	ND< 332	U	ND< 331	U	ND< 310	U	ND< 313	U	ND< 311	U	ND< 309	U	ND< 326	U
Phenol	100000	ND< 332	U	ND< 294	U	ND< 335	U	ND< 1630	U	ND< 3130	U	ND< 292	U	ND< 384	U	ND< 332	U	ND< 331	U	ND< 310	U	ND< 313	U	ND< 311	U	ND< 309	U	ND< 326	U
Pyrene	100000	ND< 332	U	ND< 294	U	867		971	J	5020		ND< 292	U	ND< 384	U	473		ND< 331	U	ND< 310	U	ND< 313	U	163	J	ND< 309	U	ND< 326	U

NOTES:

1. Soil sample analytical results are compared to the New York State Department of Environmental Conservation (NYSDEC) Title 6 of the official compilation of New York Codes, Rules, and Regulations (NYCRR) Part 375 Restricted Residential Soil Cleanup Objectives (RRSCOs).
2. RRSCO exceedances are in bold and highlighted yellow.
3. ND = Not Detected
4. Results shown as "ND" with Reporting Limits exceeding RRSCOs are in bold.
5. SVOCs = Semi-Volatile Organic Compounds
6. µg/kg = micrograms per kilogram.
7. Qualifier (Q) definitions are provided in the official lab reports.

TABLE 1B: Semi Volatile Organic Compounds (SVOCs) in Soil
AOC-1 - Power House and Former Coal Storage Area
Soil Sample Results (non-QA/QC)
Hudson River Psychiatric Center - North BCP Site, Poughkeepsie, NY
PVE Sheffler File #560909

	Date Sampled	7/16/2014		7/16/2014		7/16/2014		7/16/2014		7/16/2014		7/16/2014		7/16/2014		7/16/2014		7/16/2014		7/16/2014		7/16/2014		7/17/2014		7/17/2014		7/17/2014	
	Location	PH-16		PH-16		PH-17		PH-17		PH-17		PH-18		PH-18		PH-18		PH-19		PH-19		PH-19		PH-20		PH-20		PH-20	
	Sample ID	PH-16 1-2'		PH-16 12-13'		PH-17 0-2"		PH-17 1-2'		PH-17 2-4'		PH-18 0-2"		PH-18 1-2'		PH-18 9-10.5		PH-19 0-2"		PH-19 1-2'		PH-19 12-13'		PH-20 0-2"		PH-20 1-2'		PH-20 7-9'	
Analyte	RRSCOs	Result	Q	Result	Q	Result	Q	Result	Q	Result	Q	Result	Q	Result	Q	Result	Q	Result	Q	Result	Q	Result	Q	Result	Q	Result	Q	Result	Q
SVOCs (µg/kg)																													
1,2,4,5-Tetrachlorobenzene		ND< 320	U	ND< 326	U	ND< 1560	U	ND< 1530	U	ND< 313	U	ND< 319	U	ND< 319	U	ND< 306	U	ND< 328	U	ND< 334	U	ND< 327	U	ND< 1610	U	ND< 1530	U	ND< 316	U
1,2,4-Trichlorobenzene		ND< 320	U	ND< 326	U	ND< 1560	U	ND< 1530	U	ND< 313	U	ND< 319	U	ND< 319	U	ND< 306	U	ND< 328	U	ND< 334	U	ND< 327	U	ND< 1610	U	ND< 1530	U	ND< 316	U
1,2-Dichlorobenzene	100000	ND< 320	U	ND< 326	U	ND< 1560	U	ND< 1530	U	ND< 313	U	ND< 319	U	ND< 319	U	ND< 306	U	ND< 328	U	ND< 334	U	ND< 327	U	ND< 1610	U	ND< 1530	U	ND< 316	U
1,3-Dichlorobenzene	49000	ND< 320	U	ND< 326	U	ND< 1560	U	ND< 1530	U	ND< 313	U	ND< 319	U	ND< 319	U	ND< 306	U	ND< 328	U	ND< 334	U	ND< 327	U	ND< 1610	U	ND< 1530	U	ND< 316	U
1,4-Dichlorobenzene	13000	ND< 320	U	ND< 326	U	ND< 1560	U	ND< 1530	U	ND< 313	U	ND< 319	U	ND< 319	U	ND< 306	U	ND< 328	U	ND< 334	U	ND< 327	U	ND< 1610	U	ND< 1530	U	ND< 316	U
2,2-Oxybis(2-Chloropropane)		ND< 320	U	ND< 326	U	ND< 1560	U	ND< 1530	U	ND< 313	U	ND< 319	U	ND< 319	U	ND< 306	U	ND< 328	U	ND< 334	U	ND< 327	U	ND< 1610	U	ND< 1530	U	ND< 316	U
2,3,4,6-Tetrachlorophenol		ND< 320	U	ND< 326	U	ND< 1560	U	ND< 1530	U	ND< 313	U	ND< 319	U	ND< 319	U	ND< 306	U	ND< 328	U	ND< 334	U	ND< 327	U	ND< 1610	U	ND< 1530	U	ND< 316	U
2,4,5-Trichlorophenol		ND< 641	U	ND< 652	U	ND< 3120	U	ND< 3050	U	ND< 626	U	ND< 638	U	ND< 639	U	ND< 612	U	ND< 657	U	ND< 669	U	ND< 654	U	ND< 3230	U	ND< 3050	U	ND< 631	U
2,4,6-Trichlorophenol		ND< 320	U	ND< 326	U	ND< 1560	U	ND< 1530	U	ND< 313	U	ND< 319	U	ND< 319	U	ND< 306	U	ND< 328	U	ND< 334	U	ND< 327	U	ND< 1610	U	ND< 1530	U	ND< 316	U
2,4-Dichlorophenol		ND< 320	U	ND< 326	U	ND< 1560	U	ND< 1530	U	ND< 313	U	ND< 319	U	ND< 319	U	ND< 306	U	ND< 328	U	ND< 334	U	ND< 327	U	ND< 1610	U	ND< 1530	U	ND< 316	U
2,4-Dimethylphenol		ND< 320	U	ND< 326	U	ND< 1560	U	ND< 1530	U	ND< 313	U	ND< 319	U	ND< 319	U	ND< 306	U	ND< 328	U	ND< 334	U	ND< 327	U	ND< 1610	U	ND< 1530	U	ND< 316	U
2,4-Dinitrophenol		ND< 641	U	ND< 652	U	ND< 3120	U	ND< 3050	U	ND< 626	U	ND< 638	U	ND< 639	U	ND< 612	U	ND< 657	U	ND< 669	U	ND< 654	U	ND< 3230	U	ND< 3050	U	ND< 631	U
2,4-Dinitrotoluene		ND< 320	U	ND< 326	U	ND< 1560	U	ND< 1530	U	ND< 313	U	ND< 319	U	ND< 319	U	ND< 306	U	ND< 328	U	ND< 334	U	ND< 327	U	ND< 1610	U	ND< 1530	U	ND< 316	U
2,6-Dinitrotoluene		ND< 320	U	ND< 326	U	ND< 1560	U	ND< 1530	U	ND< 313	U	ND< 319	U	ND< 319	U	ND< 306	U	ND< 328	U	ND< 334	U	ND< 327	U	ND< 1610	U	ND< 1530	U	ND< 316	U
2-Chloronaphthalene		ND< 320	U	ND< 326	U	ND< 1560	U	ND< 1530	U	ND< 313	U	ND< 319	U	ND< 319	U	ND< 306	U	ND< 328	U	ND< 334	U	ND< 327	U	ND< 1610	U	ND< 1530	U	ND< 316	U
2-Chlorophenol		ND< 320	U	ND< 326	U	ND< 1560	U	ND< 1530	U	ND< 313	U	ND< 319	U	ND< 319	U	ND< 306	U	ND< 328	U	ND< 334	U	ND< 327	U	ND< 1610	U	ND< 1530	U	ND< 316	U
2-Methylnaphthalene		ND< 320	U	ND< 326	U	ND< 1560	U	ND< 1530	U	ND< 313	U	ND< 319	U	ND< 319	U	ND< 306	U	ND< 328	U	ND< 334	U	ND< 327	U	ND< 1610	U	ND< 1530	U	ND< 316	U
2-Methylphenol (O-Cresol)	100000	ND< 320	U	ND< 326	U	ND< 1560	U	ND< 1530	U	ND< 313	U	ND< 319	U	ND< 319	U	ND< 306	U	ND< 328	U	ND< 334	U	ND< 327	U	ND< 1610	U	ND< 1530	U	ND< 316	U
2-Nitroaniline		ND< 641	U	ND< 652	U	ND< 3120	U	ND< 3050	U	ND< 626	U	ND< 638	U	ND< 639	U	ND< 612	U	ND< 657	U	ND< 669	U	ND< 654	U	ND< 3230	U	ND< 3050	U	ND< 631	U
2-Nitrophenol		ND< 320	U	ND< 326	U	ND< 1560	U	ND< 1530	U	ND< 313	U	ND< 319	U	ND< 319	U	ND< 306	U	ND< 328	U	ND< 334	U	ND< 327	U	ND< 1610	U	ND< 1530	U	ND< 316	U
3,3'-Dichlorobenzidine		ND< 320	U	ND< 326	U	ND< 1560	U	ND< 1530	U	ND< 313	U	ND< 319	U	ND< 319	U	ND< 306	U	ND< 328	U	ND< 334	U	ND< 327	U	ND< 1610	U	ND< 1530	U	ND< 316	U
3-Methylphenol	100000	ND< 320	U	ND< 326	U	ND< 1560	U	ND< 1530	U	ND< 313	U	ND< 319	U	ND< 319	U	ND< 306	U	ND< 328	U	ND< 334	U	ND< 327	U	ND< 1610	U	ND< 1530	U	ND< 316	U
3-Nitroaniline		ND< 641	U	ND< 652	U	ND< 3120	U	ND< 3050	U	ND< 626	U	ND< 638	U	ND< 639	U	ND< 612	U	ND< 657	U	ND< 669	U	ND< 654	U	ND< 3230	U	ND< 3050	U	ND< 631	U
4,6-Dinitro-2-Methylphenol		ND< 641	U	ND< 652	U	ND< 3120	U	ND< 3050	U	ND< 626	U	ND< 638	U	ND< 639	U	ND< 612	U	ND< 657	U	ND< 669	U	ND< 654	U	ND< 3230	U	ND< 3050	U	ND< 631	U
4-Bromophenyl Phenyl Ether		ND< 320	U	ND< 326	U	ND< 1560	U	ND< 1530	U	ND< 313	U	ND< 319	U	ND< 319	U	ND< 306	U	ND< 328	U	ND< 334	U	ND< 327	U	ND< 1610	U	ND< 1530	U	ND< 316	U
4-Chloro-3-Methylphenol		ND< 320	U	ND< 326	U	ND< 1560	U	ND< 1530	U	ND< 313	U	ND< 319	U	ND< 319	U	ND< 306	U	ND< 328	U	ND< 334	U	ND< 327	U	ND< 1610	U	ND< 1530	U	ND< 316	U
4-Chloroaniline		ND< 320	U	ND< 326	U	ND< 1560	U	ND< 1530	U	ND< 313	U	ND< 319	U	ND< 319	U	ND< 306	U	ND< 328	U	ND< 334	U	ND< 327	U	ND< 1610	U	ND< 1530	U	ND< 316	U
4-Chlorophenyl Phenyl Ether		ND< 320	U	ND< 326	U	ND< 1560	U	ND< 1530	U	ND< 313	U	ND< 319	U	ND< 319	U	ND< 306	U	ND< 328	U	ND< 334	U	ND< 327	U	ND< 1610	U	ND< 1530	U	ND< 316	U
4-Nitroaniline		ND< 641	U	ND< 652	U	ND< 3120	U	ND< 3050	U	ND< 626	U	ND< 638	U	ND< 639	U	ND< 612	U	ND< 657	U	ND< 669	U	ND< 654	U	ND< 3230	U	ND< 3050	U	ND< 631	U
4-Nitrophenol		ND< 641	U	ND< 652	U	ND< 3120	U	ND< 3050	U	ND< 626	U	ND< 638	U	ND< 639	U	ND< 612	U	ND< 657	U	ND< 669	U	ND< 654	U	ND< 3230	U	ND< 3050	U	ND< 631	U
Acenaphthene	100000	ND< 320	U	ND< 326	U	ND< 1560	U	ND< 1530	U	ND< 313	U	ND< 319	U	ND< 319	U	ND< 306	U	ND< 328	U	ND< 334	U	ND< 327	U	ND< 1610	U	ND< 1530	U	ND< 316	U
Acenaphthylene	100000	ND< 320	U	ND< 326	U	ND< 1560	U	ND< 1530	U	ND< 313	U	ND< 319	U	ND< 319	U	ND< 306	U	ND< 328	U	208	J	ND< 327	U	979	J	2770		ND< 316	U
Acetophenone		ND< 320	U	ND< 326	U	ND< 1560	U	ND< 1530	U	ND< 313	U	ND< 319	U	ND< 319	U	ND< 306	U	ND< 328	U	ND< 334	U	ND< 327	U	ND< 1610	U	ND< 1530	U	ND< 316	U
Anthracene	100000	ND< 320	U	ND< 326	U	ND< 1560	U	ND< 1530	U	ND< 313	U	ND< 319	U	ND< 319	U	ND< 306	U	ND< 328	U	196	J	ND< 327	U	1650		3270		ND< 316	U
Atrazine		ND< 320	U	ND< 326	U	ND< 1560	U	ND< 1530	U	ND< 313	U	ND< 319	U	ND< 319	U	ND< 306	U	ND< 328	U	ND< 334	U	ND< 327	U	ND< 1610	U	ND< 1530	U	ND< 316	U
Benzaldehyde		ND< 320	U	ND< 326	U	ND< 1560	U	ND< 1530	U	ND< 313	U	ND< 319	U	ND< 319	U	ND< 306	U	ND< 328	U	ND< 334	U	ND< 327	U	ND< 1610	U	ND< 1530	U	ND< 316	U
Benzo(A)Anthracene	**1000**	ND< 320	U	ND< 326	U	**ND< 1560**	**U**	**ND< 1530**	**U**	ND< 313	U	ND< 319	U	ND< 319	U	ND< 306	U	271	J	346		ND< 327	U	**2370**		**6280**		ND< 316	U
Benzo(A)Pyrene	**1000**	ND< 320	U	ND< 326	U	**ND< 1560**	**U**	**ND< 1530**	**U**	ND< 313	U	ND< 319	U	ND< 319	U	ND< 306	U	244	J	360		ND< 327	U	**2010**		**5870**		ND< 316	U
Benzo(B)Fluoranthene	**1000**	ND< 320	U	ND< 326	U	**ND< 1560**	**U**	**ND< 1530**	**U**	ND< 313	U	ND< 319	U	ND< 319	U	ND< 306	U	269	J	329	J	ND< 327	U	**1610**	**J**	**6690**		ND< 316	U
Benzo(G,H,I)Perylene	100000	ND< 320	U	ND< 326	U	ND< 1560	U	ND< 1530	U	ND< 313	U	ND< 319	U	ND< 319	U	ND< 306	U	164	J	229	J	ND< 327	U	1090	J	3620		ND< 316	U
Benzo(K)Fluoranthene	**3900**	ND< 320	U	ND< 326	U	ND< 1560	U	ND< 1530	U	ND< 313	U	ND< 319	U	ND< 319	U	ND< 306	U	208	J	275	J	ND< 327	U	1770		**4020**		ND< 316	U
Benzyl Butyl Phthalate		ND< 320	U	ND< 326	U	ND< 1560	U	ND< 1530	U	ND< 313	U	ND< 319	U	ND< 319	U	ND< 306	U	ND< 328	U	ND< 334	U	ND< 327	U	ND< 1610	U	ND< 1530	U	ND< 316	U
Biphenyl (Diphenyl)		ND< 320	U	ND< 326	U	ND< 1560	U	ND< 1530	U	ND< 313	U	ND< 319	U	ND< 319	U	ND< 306	U	ND< 328	U	ND< 334	U	ND< 327	U	ND< 1610	U	ND< 1530	U	ND< 316	U
Bis(2-Chloroethoxy) Methane		ND< 320	U	ND< 326	U	ND< 1560	U	ND< 1530	U	ND< 313	U	ND< 319	U	ND< 319	U	ND< 306	U	ND< 328	U	ND< 334	U	ND< 327	U	ND< 1610	U	ND< 1530	U	ND< 316	U
Bis(2-Chloroethyl) Ether (2-Chloroethyl Ether)		ND< 320	U	ND< 326	U	ND< 1560	U	ND< 1530	U	ND< 313	U	ND< 319	U	ND< 319	U	ND< 306	U	ND< 328	U	ND< 334	U	ND< 327	U	ND< 1610	U	ND< 1530	U	ND< 316	U
Bis(2-Ethylhexyl) Phthalate		ND< 320	U	ND< 326	U	ND< 1560	U	ND< 1530	U	ND< 313	U	ND< 319	U	ND< 319	U	ND< 306	U	ND< 328	U	ND< 334	U	ND< 327	U	ND< 1610	U	ND< 1530	U	ND< 316	U
Caprolactam		ND< 320	U	ND< 326	U	ND< 1560	U	ND< 1530	U	ND< 313	U	ND< 319	U	ND< 319	U	ND< 306	U	ND< 328	U	ND< 334	U	ND< 327	U	ND< 1610	U	ND< 1530	U	ND< 316	U
Carbazole		ND< 320	U	ND< 326	U	ND< 1560	U	ND< 1530	U	ND< 313	U	ND< 319	U	ND< 319	U	ND< 306	U	ND< 328	U	ND< 334	U	ND< 327	U	ND< 1610	U	1510	J	ND< 316	U
Chrysene	**3900**	ND< 320	U	ND< 326	U	ND< 1560	U	ND< 1530	U	ND< 313	U	ND< 319	U	ND< 319	U	ND< 306	U	287	J	364		ND< 327	U	2190		**6140**		ND< 316	U
Dibenz(A,H)Anthracene	**330**	ND< 320	U	ND< 326	U	**ND< 1560**	**U**	**ND< 1530**	**U**	ND< 313	U	ND< 319	U	ND< 319	U	ND< 306	U	ND< 328	U	**ND< 334**	**U**	ND< 327	U	**ND< 1610**	**U**	**1360**	**J**	ND< 316	U
Dibenzofuran	59000	ND< 320	U	ND< 326	U	ND< 1560	U	ND< 1530	U	ND< 313	U	ND< 319	U	ND< 319	U	ND< 306	U	ND< 328	U	ND< 334	U	ND< 327	U	ND< 1610	U	ND< 1530	U	ND< 316	U
Diethyl Phthalate		ND< 320	U	ND< 326	U	ND< 1560	U	ND< 1530	U	ND< 313	U	ND< 319	U	ND< 319	U	ND< 306	U	ND< 328	U	ND< 334	U	ND< 327	U	ND< 1610	U	ND< 1530	U	ND< 316	U
Dimethyl Phthalate		ND< 641	U	ND< 652	U	ND< 3120	U	ND< 3050	U	ND< 626	U	ND< 638	U	ND< 639	U	ND< 612	U	ND< 657	U	ND< 669	U	ND< 654	U	ND< 3230	U	ND< 3050	U	ND< 631	U
Di-N-Butyl Phthalate		ND< 320	U	ND< 326	U	ND< 1560	U	ND< 1530	U	ND< 313	U	ND< 319	U	ND< 319	U	ND< 306	U	ND< 328	U	ND< 334	U	ND< 327	U	ND< 1610	U	ND< 1530	U	ND< 316	U
Di-N-Octylphthalate		ND< 320	U	ND< 326	U	ND< 1560	U	ND< 1530	U	ND< 313	U	ND< 319	U	ND< 319	U	ND< 306	U	ND< 328	U	ND< 334	U	ND< 327	U	ND< 1610	U	ND< 1530	U	ND< 316	U
Fluoranthene	100000	ND< 320	U	ND< 326	U	ND< 1560	U	ND< 1530	U	ND< 313	U	ND< 319	U	ND< 319	U	ND< 306	U	516		706		ND< 327	U	5140		11900		ND< 316	U
Fluorene	100000	ND< 320	U	ND< 326	U	ND< 1560	U	ND< 1530	U	ND< 313	U	ND< 319	U	ND< 319	U	ND< 306	U	ND< 328	U	ND< 334	U	ND< 327	U	ND< 1610	U	ND< 1530	U	ND< 316	U
Hexachlorobenzene	**1200**	ND< 320	U	ND< 326	U	**ND< 1560**	**U**	**ND< 1530**	**U**	ND< 313	U	ND< 319	U	ND< 319	U	ND< 306	U	ND< 328	U	ND< 334	U	ND< 327	U	**ND< 1610**	**U**	**ND< 1530**	**U**	ND< 316	U
Hexachlorobutadiene		ND< 320	U	ND< 326	U	ND< 1560	U	ND< 1530	U	ND< 313	U	ND< 319	U	ND< 319	U	ND< 306	U	ND< 328	U	ND< 334	U	ND< 327	U	ND< 1610	U	ND< 1530	U	ND< 316	U
Hexachlorocyclopentadiene		ND< 320	U	ND< 326	U	ND< 1560	U	ND< 1530	U	ND< 313	U	ND< 319	U	ND< 319	U	ND< 306	U	ND< 328	U	ND< 334	U	ND< 327	U	ND< 1610	U	ND< 1530	U	ND< 316	U
Hexachloroethane		ND< 320	U	ND< 326	U	ND< 1560	U	ND< 1530	U	ND< 313	U	ND< 319	U	ND< 319	U	ND< 306	U	ND< 328	U	ND< 334	U	ND< 327	U	ND< 1610	U	ND< 1530	U	ND< 316	U
Indeno(1,2,3-C,D)Pyrene	**500**	ND< 320	U	ND< 326	U	**ND< 1560**	**U**	**ND< 1530**	**U**	ND< 313	U	ND< 319	U	ND< 319	U	ND< 306	U	169	J	318	J	ND< 327	U	**1500**	**J**	**4360**		ND< 316	U
Isophorone		ND< 320	U	ND< 326	U	ND< 1560	U	ND< 1530	U	ND< 313	U	ND< 319	U	ND< 319	U	ND< 306	U	ND< 328	U	ND< 334	U	ND< 327	U	ND< 1610	U	ND< 1530	U	ND< 316	U
Naphthalene	100000	ND< 320	U	ND< 326	U	ND< 1560	U	ND< 1530	U	ND< 313	U	ND< 319	U	ND< 319	U	ND< 306	U	ND< 328	U	ND< 334	U	ND< 327	U	ND< 1610	U	ND< 1530	U	ND< 316	U
Nitrobenzene		ND< 320	U	ND< 326	U	ND< 1560	U	ND< 1530	U	ND< 313	U	ND< 319	U	ND< 319	U	ND< 306	U	ND< 328	U	ND< 334	U	ND< 327	U	ND< 1610	U	ND< 1530	U	ND< 316	U
N-Nitrosodi-N-Propylamine		ND< 320	U	ND< 326	U	ND< 1560	U	ND< 1530	U	ND< 313	U	ND< 319	U	ND< 319	U	ND< 306	U	ND< 328	U	ND< 334	U	ND< 327	U	ND< 1610	U	ND< 1530	U	ND< 316	U
N-Nitrosodiphenylamine		ND< 320	U	ND< 326	U	ND< 1560	U	ND< 1530	U	ND< 313	U	ND< 319	U	ND< 319	U	ND< 306	U	ND< 328	U	ND< 334	U	ND< 327	U	ND< 1610	U	ND< 1530	U	ND< 316	U
Pentachlorophenol	6700	ND< 641	U	ND< 652	U	ND< 3120	U	ND< 3050	U	ND< 626	U	ND< 638	U	ND< 639	U	ND< 612	U	ND< 657	U	ND< 669	U	ND< 654	U	ND< 3230	U	ND< 3050	U	ND< 631	U
Phenanthrene	100000	ND< 320	U	ND< 326	U	ND< 1560	U	ND< 1530	U	ND< 313	U	ND< 319	U	ND< 319	U	ND< 306	U	241	J	429		ND< 327	U	4750		8120		ND< 316	U
Phenol	100000	ND< 320	U	ND< 326	U	ND< 1560	U	ND< 1530	U	ND< 313	U	ND< 319	U	ND< 319	U	ND< 306	U	ND< 328	U	ND< 334	U	ND< 327	U	ND< 1610	U	ND< 1530	U	ND< 316	U
Pyrene	100000	ND< 320	U	ND< 326	U	ND< 1560	U	ND< 1530	U	ND< 313	U	ND< 319	U	ND< 319	U	ND< 306	U	408		627		ND< 327	U	4010		9690		ND< 316	U

NOTES:

1. Soil sample analytical results are compared to the New York State Department of Environmental Conservation (NYSDEC) Title 6 of the official compilation of New York Codes, Rules, and Regulations (NYCRR) Part 375 Restricted Residential Soil Cleanup Objectives (RRSCOs).
2. RRSCO exceedances are in bold and highlighted yellow.
3. ND = Not Detected
4. Results shown as "ND" with Reporting Limits exceeding RRSCOs are in bold.
5. SVOCs = Semi-Volatile Organic Compounds
6. µg/kg = micrograms per kilogram.
7. Qualifier (Q) definitions are provided in the official lab reports.

TABLE 1B: Semi Volatile Organic Compounds (SVOCs) in Soil
AOC-1 - Power House and Former Coal Storage Area
Soil Sample Results (non-QA/QC)
Hudson River Psychiatric Center - North BCP Site, Poughkeepsie, NY
PVE Sheffler File #560909

	Date Sampled	7/17/2014		7/17/2014		7/17/2014		12/18/2014		12/18/2014		12/18/2014		12/18/2014		12/18/2014		12/18/2014		5/7/2014		5/7/2014		5/7/2014		5/7/2014		5/7/2014	
	Location	PH-21		PH-21		PH-21		PH-22		PH-22		PH-23		PH-23		PH-24		PH-24		PH-SS-1		PH-SS-1		PH-SS-1		PH-SS-2		PH-SS-2	
	Sample ID	PH-21 0-2"		PH-21 1-2'		PH-21 18-19'		PH-22 2-4'		PH-22 12-14'		PH-23 2-5'		PH-23 8-10'		PH-24 2-5'		PH-24 16-18'		PH-SS-1 0-2"		PH-SS-1 1-2'		PH-SS-1 2-3'		PH-SS-2 0-2"		PH-SS-2 1-2'	
Analyte	RRSCOs	Result	Q	Result	Q	Result	Q	Result	Q	Result	Q	Result	Q	Result	Q	Result	Q	Result	Q	Result	Q	Result	Q	Result	Q	Result	Q	Result	Q
SVOCs (µg/kg)																													
1,2,4,5-Tetrachlorobenzene		ND< 324	U	ND< 326	U	ND< 316	U	ND< 311	U	ND< 353	U	ND< 335	U	ND< 340	U	ND< 327	U	ND< 321	U	ND< 399	U	ND< 324	U	ND< 295	U	ND< 350	U	ND< 313	U
1,2,4-Trichlorobenzene		ND< 324	U	ND< 326	U	ND< 316	U	ND< 311	U	ND< 353	U	ND< 335	U	ND< 340	U	ND< 327	U	ND< 321	U	ND< 399	U	ND< 324	U	ND< 295	U	ND< 350	U	ND< 313	U
1,2-Dichlorobenzene	100000	ND< 324	U	ND< 326	U	ND< 316	U	ND< 311	U	ND< 353	U	ND< 335	U	ND< 340	U	ND< 327	U	ND< 321	U	ND< 399	U	ND< 324	U	ND< 295	U	ND< 350	U	ND< 313	U
1,3-Dichlorobenzene	49000	ND< 324	U	ND< 326	U	ND< 316	U	ND< 311	U	ND< 353	U	ND< 335	U	ND< 340	U	ND< 327	U	ND< 321	U	ND< 399	U	ND< 324	U	ND< 295	U	ND< 350	U	ND< 313	U
1,4-Dichlorobenzene	13000	ND< 324	U	ND< 326	U	ND< 316	U	ND< 311	U	ND< 353	U	ND< 335	U	ND< 340	U	ND< 327	U	ND< 321	U	ND< 399	U	ND< 324	U	ND< 295	U	ND< 350	U	ND< 313	U
2,2-Oxybis(2-Chloropropane)		ND< 324	U	ND< 326	U	ND< 316	U	ND< 311	U	ND< 353	U	ND< 335	U	ND< 340	U	ND< 327	U	ND< 321	U	ND< 399	U	ND< 324	U	ND< 295	U	ND< 350	U	ND< 313	U
2,3,4,6-Tetrachlorophenol		ND< 324	U	ND< 326	U	ND< 316	U	ND< 311	U	ND< 353	U	ND< 335	U	ND< 340	U	ND< 327	U	ND< 321	U	ND< 399	U	ND< 324	U	ND< 295	U	ND< 350	U	ND< 313	U
2,4,5-Trichlorophenol		ND< 648	U	ND< 652	U	ND< 632	U	ND< 623	U	ND< 706	U	ND< 670	U	ND< 680	U	ND< 653	U	ND< 643	U	ND< 798	U	ND< 648	U	ND< 591	U	ND< 699	U	ND< 626	U
2,4,6-Trichlorophenol		ND< 324	U	ND< 326	U	ND< 316	U	ND< 311	U	ND< 353	U	ND< 335	U	ND< 340	U	ND< 327	U	ND< 321	U	ND< 399	U	ND< 324	U	ND< 295	U	ND< 350	U	ND< 313	U
2,4-Dichlorophenol		ND< 324	U	ND< 326	U	ND< 316	U	ND< 311	U	ND< 353	U	ND< 335	U	ND< 340	U	ND< 327	U	ND< 321	U	ND< 399	U	ND< 324	U	ND< 295	U	ND< 350	U	ND< 313	U
2,4-Dimethylphenol		ND< 324	U	ND< 326	U	ND< 316	U	ND< 311	U	ND< 353	U	ND< 335	U	ND< 340	U	ND< 327	U	ND< 321	U	ND< 399	U	ND< 324	U	ND< 295	U	ND< 350	U	ND< 313	U
2,4-Dinitrophenol		ND< 648	U	ND< 652	U	ND< 632	U	ND< 623	U	ND< 706	U	ND< 670	U	ND< 680	U	ND< 653	U	ND< 643	U	ND< 798	U	ND< 648	U	ND< 591	U	ND< 699	U	ND< 626	U
2,4-Dinitrotoluene		ND< 324	U	ND< 326	U	ND< 316	U	ND< 311	U	ND< 353	U	ND< 335	U	ND< 340	U	ND< 327	U	ND< 321	U	ND< 399	U	ND< 324	U	ND< 295	U	ND< 350	U	ND< 313	U
2,6-Dinitrotoluene		ND< 324	U	ND< 326	U	ND< 316	U	ND< 311	U	ND< 353	U	ND< 335	U	ND< 340	U	ND< 327	U	ND< 321	U	ND< 399	U	ND< 324	U	ND< 295	U	ND< 350	U	ND< 313	U
2-Chloronaphthalene		ND< 324	U	ND< 326	U	ND< 316	U	ND< 311	U	ND< 353	U	ND< 335	U	ND< 340	U	ND< 327	U	ND< 321	U	ND< 399	U	ND< 324	U	ND< 295	U	ND< 350	U	ND< 313	U
2-Chlorophenol		ND< 324	U	ND< 326	U	ND< 316	U	ND< 311	U	ND< 353	U	ND< 335	U	ND< 340	U	ND< 327	U	ND< 321	U	ND< 399	U	ND< 324	U	ND< 295	U	ND< 350	U	ND< 313	U
2-Methylnaphthalene		ND< 324	U	ND< 326	U	ND< 316	U	ND< 311	U	ND< 353	U	ND< 335	U	ND< 340	U	1310		ND< 321	U	482		ND< 324	U	ND< 295	U	1080		3220	
2-Methylphenol (O-Cresol)	100000	ND< 324	U	ND< 326	U	ND< 316	U	ND< 311	U	ND< 353	U	ND< 335	U	ND< 340	U	ND< 327	U	ND< 321	U	ND< 399	U	ND< 324	U	ND< 295	U	ND< 350	U	ND< 313	U
2-Nitroaniline		ND< 648	U	ND< 652	U	ND< 632	U	ND< 623	U	ND< 706	U	ND< 670	U	ND< 680	U	ND< 653	U	ND< 643	U	ND< 798	U	ND< 648	U	ND< 591	U	ND< 699	U	ND< 626	U
2-Nitrophenol		ND< 324	U	ND< 326	U	ND< 316	U	ND< 311	U	ND< 353	U	ND< 335	U	ND< 340	U	ND< 327	U	ND< 321	U	ND< 399	U	ND< 324	U	ND< 295	U	ND< 350	U	ND< 313	U
3,3'-Dichlorobenzidine		ND< 324	U	ND< 326	U	ND< 316	U	ND< 311	U	ND< 353	U	ND< 335	U	ND< 340	U	ND< 327	U	ND< 321	U	ND< 399	U	ND< 324	U	ND< 295	U	ND< 350	U	ND< 313	U
3-Methylphenol	100000	ND< 324	U	ND< 326	U	ND< 316	U	ND< 311	U	ND< 353	U	ND< 335	U	ND< 340	U	ND< 327	U	ND< 321	U	ND< 399	U	ND< 324	U	ND< 295	U	ND< 350	U	ND< 313	U
3-Nitroaniline		ND< 648	U	ND< 652	U	ND< 632	U	ND< 623	U	ND< 706	U	ND< 670	U	ND< 680	U	ND< 653	U	ND< 643	U	ND< 798	U	ND< 648	U	ND< 591	U	ND< 699	U	ND< 626	U
4,6-Dinitro-2-Methylphenol		ND< 648	U	ND< 652	U	ND< 632	U	ND< 623	U	ND< 706	U	ND< 670	U	ND< 680	U	ND< 653	U	ND< 643	U	ND< 798	U	ND< 648	U	ND< 591	U	ND< 699	U	ND< 626	U
4-Bromophenyl Phenyl Ether		ND< 324	U	ND< 326	U	ND< 316	U	ND< 311	U	ND< 353	U	ND< 335	U	ND< 340	U	ND< 327	U	ND< 321	U	ND< 399	U	ND< 324	U	ND< 295	U	ND< 350	U	ND< 313	U
4-Chloro-3-Methylphenol		ND< 324	U	ND< 326	U	ND< 316	U	ND< 311	U	ND< 353	U	ND< 335	U	ND< 340	U	ND< 327	U	ND< 321	U	ND< 399	U	ND< 324	U	ND< 295	U	ND< 350	U	ND< 313	U
4-Chloroaniline		ND< 324	U	ND< 326	U	ND< 316	U	ND< 311	U	ND< 353	U	ND< 335	U	ND< 340	U	ND< 327	U	ND< 321	U	ND< 399	U	ND< 324	U	ND< 295	U	ND< 350	U	ND< 313	U
4-Chlorophenyl Phenyl Ether		ND< 324	U	ND< 326	U	ND< 316	U	ND< 311	U	ND< 353	U	ND< 335	U	ND< 340	U	ND< 327	U	ND< 321	U	ND< 399	U	ND< 324	U	ND< 295	U	ND< 350	U	ND< 313	U
4-Nitroaniline		ND< 648	U	ND< 652	U	ND< 632	U	ND< 623	U	ND< 706	U	ND< 670	U	ND< 680	U	ND< 653	U	ND< 643	U	ND< 798	U	ND< 648	U	ND< 591	U	ND< 699	U	ND< 626	U
4-Nitrophenol		ND< 648	U	ND< 652	U	ND< 632	U	ND< 623	U	ND< 706	U	ND< 670	U	ND< 680	U	ND< 653	U	ND< 643	U	ND< 798	U	ND< 648	U	ND< 591	U	ND< 699	U	ND< 626	U
Acenaphthene	100000	ND< 324	U	ND< 326	U	ND< 316	U	ND< 311	U	ND< 353	U	ND< 335	U	ND< 340	U	ND< 327	U	ND< 321	U	ND< 399	U	ND< 324	U	ND< 295	U	ND< 350	U	ND< 313	U
Acenaphthylene	100000	416		ND< 326	U	ND< 316	U	ND< 311	U	ND< 353	U	ND< 335	U	ND< 340	U	180	J	ND< 321	U	ND< 399	U	ND< 324	U	ND< 295	U	ND< 350	U	ND< 313	U
Acetophenone		ND< 324	U	ND< 326	U	ND< 316	U	ND< 311	U	ND< 353	U	ND< 335	U	ND< 340	U	ND< 327	U	ND< 321	U	ND< 399	U	ND< 324	U	ND< 295	U	ND< 350	U	262	J
Anthracene	100000	407		ND< 326	U	ND< 316	U	ND< 311	U	ND< 353	U	ND< 335	U	ND< 340	U	313	J	ND< 321	U	ND< 399	U	ND< 324	U	ND< 295	U	181	J	210	J
Atrazine		ND< 324	U	ND< 326	U	ND< 316	U	ND< 311	U	ND< 353	U	ND< 335	U	ND< 340	U	ND< 327	U	ND< 321	U	ND< 399	U	ND< 324	U	ND< 295	U	ND< 350	U	ND< 313	U
Benzaldehyde		ND< 324	U	ND< 326	U	ND< 316	U	ND< 311	U	ND< 353	U	ND< 335	U	ND< 340	U	ND< 327	U	ND< 321	U	ND< 399	U	ND< 324	U	ND< 295	U	ND< 350	U	ND< 313	U
Benzo(A)Anthracene	**1000**	660		254	J	ND< 316	U	611		ND< 353	U	ND< 335	U	ND< 340	U	644		ND< 321	U	229	J	ND< 324	U	ND< 295	U	511		534	
Benzo(A)Pyrene	**1000**	732		242	J	ND< 316	U	839		ND< 353	U	ND< 335	U	ND< 340	U	453		ND< 321	U	207	J	ND< 324	U	ND< 295	U	481		356	
Benzo(B)Fluoranthene	**1000**	792		219	J	ND< 316	U	758		ND< 353	U	ND< 335	U	ND< 340	U	687		ND< 321	U	ND< 399	U	ND< 324	U	ND< 295	U	501		341	
Benzo(G,H,I)Perylene	100000	484		175	J	ND< 316	U	627		ND< 353	U	ND< 335	U	ND< 340	U	312	J	ND< 321	U	ND< 399	U	ND< 324	U	ND< 295	U	335	J	253	J
Benzo(K)Fluoranthene	**3900**	431		236	J	ND< 316	U	625		ND< 353	U	ND< 335	U	ND< 340	U	559		ND< 321	U	287	J	ND< 324	U	ND< 295	U	287	J	381	
Benzyl Butyl Phthalate		ND< 324	U	ND< 326	U	ND< 316	U	ND< 311	U	ND< 353	U	ND< 335	U	ND< 340	U	ND< 327	U	ND< 321	U	ND< 399	U	ND< 324	U	ND< 295	U	ND< 350	U	ND< 313	U
Biphenyl (Diphenyl)		ND< 324	U	ND< 326	U	ND< 316	U	ND< 311	U	ND< 353	U	ND< 335	U	ND< 340	U	ND< 327	U	ND< 321	U	ND< 399	U	ND< 324	U	ND< 295	U	ND< 350	U	323	
Bis(2-Chloroethoxy) Methane		ND< 324	U	ND< 326	U	ND< 316	U	ND< 311	U	ND< 353	U	ND< 335	U	ND< 340	U	ND< 327	U	ND< 321	U	ND< 399	U	ND< 324	U	ND< 295	U	ND< 350	U	ND< 313	U
Bis(2-Chloroethyl) Ether (2-Chloroethyl Ether)		ND< 324	U	ND< 326	U	ND< 316	U	ND< 311	U	ND< 353	U	ND< 335	U	ND< 340	U	ND< 327	U	ND< 321	U	ND< 399	U	ND< 324	U	ND< 295	U	ND< 350	U	ND< 313	U
Bis(2-Ethylhexyl) Phthalate		ND< 324	U	ND< 326	U	ND< 316	U	ND< 311	U	ND< 353	U	ND< 335	U	ND< 340	U	195	J	ND< 321	U	ND< 399	U	ND< 324	U	ND< 295	U	ND< 350	U	ND< 313	U
Caprolactam		ND< 324	U	ND< 326	U	ND< 316	U	ND< 311	U	ND< 353	U	ND< 335	U	ND< 340	U	ND< 327	U	ND< 321	U	ND< 399	U	ND< 324	U	ND< 295	U	ND< 350	U	ND< 313	U
Carbazole		ND< 324	U	ND< 326	U	ND< 316	U	ND< 311	U	ND< 353	U	ND< 335	U	ND< 340	U	ND< 327	U	ND< 321	U	ND< 399	U	ND< 324	U	ND< 295	U	ND< 350	U	ND< 313	U
Chrysene	**3900**	684		253	J	ND< 316	U	637		ND< 353	U	ND< 335	U	ND< 340	U	865		ND< 321	U	326	J	ND< 324	U	ND< 295	U	561		693	
Dibenz(A,H)Anthracene	**330**	178	J	ND< 326	U	ND< 316	U	199	J	**ND< 353**	**U**	**ND< 335**	**U**	**ND< 340**	**U**	ND< 327	U	ND< 321	U	**ND< 399**	**U**	ND< 324	U	ND< 295	U	**ND< 350**	**U**	ND< 313	U
Dibenzofuran	59000	ND< 324	U	ND< 326	U	ND< 316	U	ND< 311	U	ND< 353	U	ND< 335	U	ND< 340	U	452		ND< 321	U	ND< 399	U	ND< 324	U	ND< 295	U	281	J	889	
Diethyl Phthalate		ND< 324	U	ND< 326	U	ND< 316	U	ND< 311	U	ND< 353	U	ND< 335	U	ND< 340	U	ND< 327	U	ND< 321	U	ND< 399	U	ND< 324	U	ND< 295	U	ND< 350	U	ND< 313	U
Dimethyl Phthalate		ND< 648	U	ND< 652	U	ND< 632	U	ND< 623	U	ND< 706	U	ND< 670	U	ND< 680	U	ND< 653	U	ND< 643	U	ND< 798	U	ND< 648	U	ND< 591	U	ND< 699	U	ND< 626	U
Di-N-Butyl Phthalate		ND< 324	U	ND< 326	U	ND< 316	U	ND< 311	U	ND< 353	U	ND< 335	U	ND< 340	U	ND< 327	U	ND< 321	U	ND< 399	U	ND< 324	U	ND< 295	U	ND< 350	U	ND< 313	U
Di-N-Octylphthalate		ND< 324	U	ND< 326	U	ND< 316	U	ND< 311	U	ND< 353	U	ND< 335	U	ND< 340	U	ND< 327	U	ND< 321	U	ND< 399	U	ND< 324	U	ND< 295	U	ND< 350	U	ND< 313	U
Fluoranthene	100000	1170		473		ND< 316	U	830		ND< 353	U	ND< 335	U	ND< 340	U	1010		ND< 321	U	482		ND< 324	U	ND< 295	U	799		874	
Fluorene	100000	ND< 324	U	ND< 326	U	ND< 316	U	ND< 311	U	ND< 353	U	ND< 335	U	ND< 340	U	ND< 327	U	ND< 321	U	ND< 399	U	ND< 324	U	ND< 295	U	ND< 350	U	ND< 313	U
Hexachlorobenzene	**1200**	ND< 324	U	ND< 326	U	ND< 316	U	ND< 311	U	ND< 353	U	ND< 335	U	ND< 340	U	ND< 327	U	ND< 321	U	ND< 399	U	ND< 324	U	ND< 295	U	ND< 350	U	ND< 313	U
Hexachlorobutadiene		ND< 324	U	ND< 326	U	ND< 316	U	ND< 311	U	ND< 353	U	ND< 335	U	ND< 340	U	ND< 327	U	ND< 321	U	ND< 399	U	ND< 324	U	ND< 295	U	ND< 350	U	ND< 313	U
Hexachlorocyclopentadiene		ND< 324	U	ND< 326	U	ND< 316	U	ND< 311	U	ND< 353	U	ND< 335	U	ND< 340	U	ND< 327	U	ND< 321	U	ND< 399	U	ND< 324	U	ND< 295	U	ND< 350	U	ND< 313	U
Hexachloroethane		ND< 324	U	ND< 326	U	ND< 316	U	ND< 311	U	ND< 353	U	ND< 335	U	ND< 340	U	ND< 327	U	ND< 321	U	ND< 399	U	ND< 324	U	ND< 295	U	ND< 350	U	ND< 313	U
Indeno(1,2,3-C,D)Pyrene	**500**	**573**		ND< 326	U	ND< 316	U	**781**		ND< 353	U	ND< 335	U	ND< 340	U	474		ND< 321	U	211	J	ND< 324	U	ND< 295	U	380		243	J
Isophorone		ND< 324	U	ND< 326	U	ND< 316	U	ND< 311	U	ND< 353	U	ND< 335	U	ND< 340	U	ND< 327	U	ND< 321	U	ND< 399	U	ND< 324	U	ND< 295	U	ND< 350	U	ND< 313	U
Naphthalene	100000	ND< 324	U	ND< 326	U	ND< 316	U	ND< 311	U	ND< 353	U	ND< 335	U	ND< 340	U	851		ND< 321	U	401		ND< 324	U	ND< 295	U	759		2230	
Nitrobenzene		ND< 324	U	ND< 326	U	ND< 316	U	ND< 311	U	ND< 353	U	ND< 335	U	ND< 340	U	ND< 327	U	ND< 321	U	ND< 399	U	ND< 324	U	ND< 295	U	ND< 350	U	ND< 313	U
N-Nitrosodi-N-Propylamine		ND< 324	U	ND< 326	U	ND< 316	U	ND< 311	U	ND< 353	U	ND< 335	U	ND< 340	U	ND< 327	U	ND< 321	U	ND< 399	U	ND< 324	U	ND< 295	U	ND< 350	U	ND< 313	U
N-Nitrosodiphenylamine		ND< 324	U	ND< 326	U	ND< 316	U	ND< 311	U	ND< 353	U	ND< 335	U	ND< 340	U	ND< 327	U	ND< 321	U	ND< 399	U	ND< 324	U	ND< 295	U	ND< 350	U	ND< 313	U
Pentachlorophenol	6700	ND< 648	U	ND< 652	U	ND< 632	U	ND< 623	U	ND< 706	U	ND< 670	U	ND< 680	U	ND< 653	U	ND< 643	U	ND< 798	U	ND< 648	U	ND< 591	U	ND< 699	U	ND< 626	U
Phenanthrene	100000	695		215	J	ND< 316	U	218	J	ND< 353	U	ND< 335	U	ND< 340	U	1480		ND< 321	U	363	J	ND< 324	U	ND< 295	U	966		2240	
Phenol	100000	ND< 324	U	ND< 326	U	ND< 316	U	ND< 311	U	ND< 353	U	ND< 335	U	ND< 340	U	ND< 327	U	ND< 321	U	ND< 399	U	ND< 324	U	ND< 295	U	ND< 350	U	ND< 313	U
Pyrene	100000	1040		392		ND< 316	U	871		ND< 353	U	ND< 335	U	ND< 340	U	911		ND< 321	U	414		ND< 324	U	ND< 295	U	746		843	

NOTES:

1. Soil sample analytical results are compared to the New York State Department of Environmental Conservation (NYSDEC) Title 6 of the official compilation of New York Codes, Rules, and Regulations (NYCRR) Part 375 Restricted Residential Soil Cleanup Objectives (RRSCOs).
2. RRSCO exceedances are in bold and highlighted yellow.
3. ND = Not Detected
4. Results shown as "ND" with Reporting Limits exceeding RRSCOs are in bold.
5. SVOCs = Semi-Volatile Organic Compounds
6. µg/kg = micrograms per kilogram.
7. Qualifier (Q) definitions are provided in the official lab reports.

TABLE 1B: Semi Volatile Organic Compounds (SVOCs) in Soil
AOC-1 - Power House and Former Coal Storage Area
Soil Sample Results (non-QA/QC)
Hudson River Psychiatric Center - North BCP Site, Poughkeepsie, NY
PVE Sheffler File #560909

	Date Sampled	5/7/2014		5/7/2014		5/7/2014		5/7/2014		5/6/2014		5/7/2014		5/7/2014		5/6/2014		5/6/2014		5/6/2014		5/6/2014		5/6/2014		7/17/2014		7/17/2014		11/25/2014	
	Location	PH-SS-2		PH-SS-3		PH-SS-3		PH-SS-3		PH-SS-4		PH-SS-4		PH-SS-4		PH-SS-5		PH-SS-5		PH-SS-6		PH-SS-6		PH-SS-7		PH-SS-7		PH-SS-8	
	Sample ID	PH-SS-2 4-5'		PH-SS-3 0-2"		PH-SS-3 1-2'		PH-SS-3 2-3'		PH-SS-4 0-2"		PH-SS-4 1-2'		PH-SS-4 4-5'		PH-SS-5 0-2"		PH-SS-5 1-2'		PH-SS-6 0-2"		PH-SS-6 1-2'		PH-SS-7 0-2"		PH-SS-7 1-2'		PH-SS-8 (0-2")	
Analyte	RRSCOs	Result	Q	Result	Q	Result	Q	Result	Q	Result	Q	Result	Q	Result	Q	Result	Q	Result	Q	Result	Q	Result	Q	Result	Q	Result	Q	Result	Q	Result	Q
SVOCs (µg/kg)																															
1,2,4,5-Tetrachlorobenzene		ND< 315	U	ND< 359	U	ND< 320	U	ND< 313	U	ND< 344	U	ND< 312	U	ND< 306	U	ND< 358	U	ND< 344	U	ND< 357	U	ND< 344	U	ND< 306	U	ND< 310	U	ND< 384	U
1,2,4-Trichlorobenzene		ND< 315	U	ND< 359	U	ND< 320	U	ND< 313	U	ND< 344	U	ND< 312	U	ND< 306	U	ND< 358	U	ND< 344	U	ND< 357	U	ND< 344	U	ND< 306	U	ND< 310	U	ND< 384	U
1,2-Dichlorobenzene	100000	ND< 315	U	ND< 359	U	ND< 320	U	ND< 313	U	ND< 344	U	ND< 312	U	ND< 306	U	ND< 358	U	ND< 344	U	ND< 357	U	ND< 344	U	ND< 306	U	ND< 310	U	ND< 384	U
1,3-Dichlorobenzene	49000	ND< 315	U	ND< 359	U	ND< 320	U	ND< 313	U	ND< 344	U	ND< 312	U	ND< 306	U	ND< 358	U	ND< 344	U	ND< 357	U	ND< 344	U	ND< 306	U	ND< 310	U	ND< 384	U
1,4-Dichlorobenzene	13000	ND< 315	U	ND< 359	U	ND< 320	U	ND< 313	U	ND< 344	U	ND< 312	U	ND< 306	U	ND< 358	U	ND< 344	U	ND< 357	U	ND< 344	U	ND< 306	U	ND< 310	U	ND< 384	U
2,2-Oxybis(2-Chloropropane)		ND< 315	U	ND< 359	U	ND< 320	U	ND< 313	U	ND< 344	U	ND< 312	U	ND< 306	U	ND< 358	U	ND< 344	U	ND< 357	U	ND< 344	U	ND< 306	U	ND< 310	U	ND< 384	U
2,3,4,6-Tetrachlorophenol		ND< 315	U	ND< 359	U	ND< 320	U	ND< 313	U	ND< 344	U	ND< 312	U	ND< 306	U	ND< 358	U	ND< 344	U	ND< 357	U	ND< 344	U	ND< 306	U	ND< 310	U	ND< 384	U
2,4,5-Trichlorophenol		ND< 630	U	ND< 718	U	ND< 641	U	ND< 626	U	ND< 687	U	ND< 624	U	ND< 611	U	ND< 716	U	ND< 689	U	ND< 713	U	ND< 688	U	ND< 612	U	ND< 619	U	ND< 768	U
2,4,6-Trichlorophenol		ND< 315	U	ND< 359	U	ND< 320	U	ND< 313	U	ND< 344	U	ND< 312	U	ND< 306	U	ND< 358	U	ND< 344	U	ND< 357	U	ND< 344	U	ND< 306	U	ND< 310	U	ND< 384	U
2,4-Dichlorophenol		ND< 315	U	ND< 359	U	ND< 320	U	ND< 313	U	ND< 344	U	ND< 312	U	ND< 306	U	ND< 358	U	ND< 344	U	ND< 357	U	ND< 344	U	ND< 306	U	ND< 310	U	ND< 384	U
2,4-Dimethylphenol		ND< 315	U	ND< 359	U	ND< 320	U	ND< 313	U	ND< 344	U	ND< 312	U	ND< 306	U	ND< 358	U	ND< 344	U	ND< 357	U	ND< 344	U	ND< 306	U	ND< 310	U	ND< 384	U
2,4-Dinitrophenol		ND< 630	U	ND< 718	U	ND< 641	U	ND< 626	U	ND< 687	U	ND< 624	U	ND< 611	U	ND< 716	U	ND< 689	U	ND< 713	U	ND< 688	U	ND< 612	U	ND< 619	U	ND< 768	U
2,4-Dinitrotoluene		ND< 315	U	ND< 359	U	ND< 320	U	ND< 313	U	ND< 344	U	ND< 312	U	ND< 306	U	ND< 358	U	ND< 344	U	ND< 357	U	ND< 344	U	ND< 306	U	ND< 310	U	ND< 384	U
2,6-Dinitrotoluene		ND< 315	U	ND< 359	U	ND< 320	U	ND< 313	U	ND< 344	U	ND< 312	U	ND< 306	U	ND< 358	U	ND< 344	U	ND< 357	U	ND< 344	U	ND< 306	U	ND< 310	U	ND< 384	U
2-Chloronaphthalene		ND< 315	U	ND< 359	U	ND< 320	U	ND< 313	U	ND< 344	U	ND< 312	U	ND< 306	U	ND< 358	U	ND< 344	U	ND< 357	U	ND< 344	U	ND< 306	U	ND< 310	U	ND< 384	U
2-Chlorophenol		ND< 315	U	ND< 359	U	ND< 320	U	ND< 313	U	ND< 344	U	ND< 312	U	ND< 306	U	ND< 358	U	ND< 344	U	ND< 357	U	ND< 344	U	ND< 306	U	ND< 310	U	ND< 384	U
2-Methylnaphthalene		ND< 315	U	ND< 359	U	ND< 320	U	ND< 313	U	ND< 344	U	ND< 312	U	ND< 306	U	903		426		212	J	ND< 344	U	ND< 306	U	ND< 310	U	ND< 384	U
2-Methylphenol (O-Cresol)	100000	ND< 315	U	ND< 359	U	ND< 320	U	ND< 313	U	ND< 344	U	ND< 312	U	ND< 306	U	ND< 358	U	ND< 344	U	ND< 357	U	ND< 344	U	ND< 306	U	ND< 310	U	ND< 384	U
2-Nitroaniline		ND< 630	U	ND< 718	U	ND< 641	U	ND< 626	U	ND< 687	U	ND< 624	U	ND< 611	U	ND< 716	U	ND< 689	U	ND< 713	U	ND< 688	U	ND< 612	U	ND< 619	U	ND< 768	U
2-Nitrophenol		ND< 315	U	ND< 359	U	ND< 320	U	ND< 313	U	ND< 344	U	ND< 312	U	ND< 306	U	ND< 358	U	ND< 344	U	ND< 357	U	ND< 344	U	ND< 306	U	ND< 310	U	ND< 384	U
3,3'-Dichlorobenzidine		ND< 315	U	ND< 359	U	ND< 320	U	ND< 313	U	ND< 344	U	ND< 312	U	ND< 306	U	ND< 358	U	ND< 344	U	ND< 357	U	ND< 344	U	ND< 306	U	ND< 310	U	ND< 384	U
3-Methylphenol	100000	ND< 315	U	ND< 359	U	ND< 320	U	ND< 313	U	ND< 344	U	ND< 312	U	ND< 306	U	ND< 358	U	ND< 344	U	ND< 357	U	ND< 344	U	ND< 306	U	ND< 310	U	ND< 384	U
3-Nitroaniline		ND< 630	U	ND< 718	U	ND< 641	U	ND< 626	U	ND< 687	U	ND< 624	U	ND< 611	U	ND< 716	U	ND< 689	U	ND< 713	U	ND< 688	U	ND< 612	U	ND< 619	U	ND< 768	U
4,6-Dinitro-2-Methylphenol		ND< 630	U	ND< 718	U	ND< 641	U	ND< 626	U	ND< 687	U	ND< 624	U	ND< 611	U	ND< 716	U	ND< 689	U	ND< 713	U	ND< 688	U	ND< 612	U	ND< 619	U	ND< 768	U
4-Bromophenyl Phenyl Ether		ND< 315	U	ND< 359	U	ND< 320	U	ND< 313	U	ND< 344	U	ND< 312	U	ND< 306	U	ND< 358	U	ND< 344	U	ND< 357	U	ND< 344	U	ND< 306	U	ND< 310	U	ND< 384	U
4-Chloro-3-Methylphenol		ND< 315	U	ND< 359	U	ND< 320	U	ND< 313	U	ND< 344	U	ND< 312	U	ND< 306	U	ND< 358	U	ND< 344	U	ND< 357	U	ND< 344	U	ND< 306	U	ND< 310	U	ND< 384	U
4-Chloroaniline		ND< 315	U	ND< 359	U	ND< 320	U	ND< 313	U	ND< 344	U	ND< 312	U	ND< 306	U	ND< 358	U	ND< 344	U	ND< 357	U	ND< 344	U	ND< 306	U	ND< 310	U	ND< 384	U
4-Chlorophenyl Phenyl Ether		ND< 315	U	ND< 359	U	ND< 320	U	ND< 313	U	ND< 344	U	ND< 312	U	ND< 306	U	ND< 358	U	ND< 344	U	ND< 357	U	ND< 344	U	ND< 306	U	ND< 310	U	ND< 384	U
4-Nitroaniline		ND< 630	U	ND< 718	U	ND< 641	U	ND< 626	U	ND< 687	U	ND< 624	U	ND< 611	U	ND< 716	U	ND< 689	U	ND< 713	U	ND< 688	U	ND< 612	U	ND< 619	U	ND< 768	U
4-Nitrophenol		ND< 630	U	ND< 718	U	ND< 641	U	ND< 626	U	ND< 687	U	ND< 624	U	ND< 611	U	ND< 716	U	ND< 689	U	ND< 713	U	ND< 688	U	ND< 612	U	ND< 619	U	ND< 768	U
Acenaphthene	100000	ND< 315	U	ND< 359	U	ND< 320	U	ND< 313	U	ND< 344	U	ND< 312	U	ND< 306	U	ND< 358	U	ND< 344	U	ND< 357	U	ND< 344	U	ND< 306	U	ND< 310	U	ND< 384	U
Acenaphthylene	100000	ND< 315	U	ND< 359	U	ND< 320	U	ND< 313	U	ND< 344	U	ND< 312	U	ND< 306	U	524		ND< 344	U	ND< 357	U	ND< 344	U	176	J	ND< 310	U	ND< 384	U
Acetophenone		ND< 315	U	ND< 359	U	ND< 320	U	ND< 313	U	ND< 344	U	ND< 312	U	ND< 306	U	ND< 358	U	ND< 344	U	ND< 357	U	ND< 344	U	ND< 306	U	ND< 310	U	ND< 384	U
Anthracene	100000	ND< 315	U	ND< 359	U	183	J	ND< 313	U	ND< 344	U	ND< 312	U	ND< 306	U	289	J	ND< 344	U	ND< 357	U	ND< 344	U	657		326		239	J
Atrazine		ND< 315	U	ND< 359	U	ND< 320	U	ND< 313	U	ND< 344	U	ND< 312	U	ND< 306	U	ND< 358	U	ND< 344	U	ND< 357	U	ND< 344	U	ND< 306	U	ND< 310	U	ND< 384	U
Benzaldehyde		ND< 315	U	ND< 359	U	ND< 320	U	ND< 313	U	ND< 344	U	ND< 312	U	ND< 306	U	ND< 358	U	ND< 344	U	ND< 357	U	ND< 344	U	ND< 306	U	ND< 310	U	ND< 384	U
Benzo(A)Anthracene	**1000**	ND< 315	U	ND< 359	U	300	J	ND< 313	U	ND< 344	U	ND< 312	U	ND< 306	U	734		366		ND< 357	U	ND< 344	U	**2560**		737		733	
Benzo(A)Pyrene	**1000**	ND< 315	U	ND< 359	U	287	J	ND< 313	U	ND< 344	U	ND< 312	U	ND< 306	U	697		343	J	ND< 357	U	ND< 344	U	**2120**		659		664	
Benzo(B)Fluoranthene	**1000**	ND< 315	U	ND< 359	U	327		ND< 313	U	ND< 344	U	ND< 312	U	ND< 306	U	748		292	J	ND< 357	U	ND< 344	U	**2280**		622		637	
Benzo(G,H,I)Perylene	100000	ND< 315	U	ND< 359	U	201	J	ND< 313	U	ND< 344	U	ND< 312	U	ND< 306	U	531		245	J	ND< 357	U	ND< 344	U	1480		457		437	
Benzo(K)Fluoranthene	**3900**	ND< 315	U	ND< 359	U	204	J	ND< 313	U	ND< 344	U	ND< 312	U	ND< 306	U	728		374		ND< 357	U	ND< 344	U	1560		574		482	
Benzyl Butyl Phthalate		ND< 315	U	ND< 359	U	ND< 320	U	ND< 313	U	ND< 344	U	ND< 312	U	ND< 306	U	ND< 358	U	ND< 344	U	ND< 357	U	ND< 344	U	ND< 306	U	ND< 310	U	ND< 384	U
Biphenyl (Diphenyl)		ND< 315	U	ND< 359	U	ND< 320	U	ND< 313	U	ND< 344	U	ND< 312	U	ND< 306	U	ND< 358	U	ND< 344	U	ND< 357	U	ND< 344	U	ND< 306	U	ND< 310	U	ND< 384	U
Bis(2-Chloroethoxy) Methane		ND< 315	U	ND< 359	U	ND< 320	U	ND< 313	U	ND< 344	U	ND< 312	U	ND< 306	U	ND< 358	U	ND< 344	U	ND< 357	U	ND< 344	U	ND< 306	U	ND< 310	U	ND< 384	U
Bis(2-Chloroethyl) Ether (2-Chloroethyl Ether)		ND< 315	U	ND< 359	U	ND< 320	U	ND< 313	U	ND< 344	U	ND< 312	U	ND< 306	U	ND< 358	U	ND< 344	U	ND< 357	U	ND< 344	U	ND< 306	U	ND< 310	U	ND< 384	U
Bis(2-Ethylhexyl) Phthalate		ND< 315	U	ND< 359	U	ND< 320	U	ND< 313	U	ND< 344	U	ND< 312	U	ND< 306	U	ND< 358	U	ND< 344	U	ND< 357	U	ND< 344	U	ND< 306	U	ND< 310	U	ND< 384	U
Caprolactam		ND< 315	U	ND< 359	U	ND< 320	U	ND< 313	U	ND< 344	U	ND< 312	U	ND< 306	U	ND< 358	U	ND< 344	U	ND< 357	U	ND< 344	U	ND< 306	U	ND< 310	U	ND< 384	U
Carbazole		ND< 315	U	ND< 359	U	ND< 320	U	ND< 313	U	ND< 344	U	ND< 312	U	ND< 306	U	ND< 358	U	ND< 344	U	ND< 357	U	ND< 344	U	ND< 306	U	ND< 310	U	ND< 384	U
Chrysene	**3900**	ND< 315	U	ND< 359	U	432		ND< 313	U	ND< 344	U	ND< 312	U	ND< 306	U	998		456		ND< 357	U	ND< 344	U	2310		627		798	
Dibenz(A,H)Anthracene	**330**	ND< 315	U	**ND< 359**	**U**	ND< 320	U	ND< 313	U	**ND< 344**	**U**	ND< 312	U	ND< 306	U	**ND< 358**	**U**	**ND< 344**	**U**	**ND< 357**	**U**	**ND< 344**	**U**	**537**		ND< 310	U	**ND< 384**	**U**
Dibenzofuran	59000	ND< 315	U	ND< 359	U	ND< 320	U	ND< 313	U	ND< 344	U	ND< 312	U	ND< 306	U	233	J	ND< 344	U	ND< 357	U	ND< 344	U	ND< 306	U	ND< 310	U	ND< 384	U
Diethyl Phthalate		ND< 315	U	ND< 359	U	ND< 320	U	ND< 313	U	ND< 344	U	ND< 312	U	ND< 306	U	ND< 358	U	ND< 344	U	ND< 357	U	ND< 344	U	ND< 306	U	ND< 310	U	ND< 384	U
Dimethyl Phthalate		ND< 630	U	ND< 718	U	ND< 641	U	ND< 626	U	ND< 687	U	ND< 624	U	ND< 611	U	ND< 716	U	ND< 689	U	ND< 713	U	ND< 688	U	ND< 612	U	ND< 619	U	ND< 768	U
Di-N-Butyl Phthalate		ND< 315	U	ND< 359	U	ND< 320	U	ND< 313	U	ND< 344	U	ND< 312	U	ND< 306	U	ND< 358	U	ND< 344	U	ND< 357	U	ND< 344	U	ND< 306	U	ND< 310	U	ND< 384	U
Di-N-Octylphthalate		ND< 315	U	ND< 359	U	ND< 320	U	ND< 313	U	ND< 344	U	ND< 312	U	ND< 306	U	ND< 358	U	ND< 344	U	ND< 357	U	ND< 344	U	ND< 306	U	ND< 310	U	ND< 384	U
Fluoranthene	100000	ND< 315	U	ND< 359	U	592		ND< 313	U	ND< 344	U	ND< 312	U	ND< 306	U	1720		843		239	J	ND< 344	U	4270		1430		1240	
Fluorene	100000	ND< 315	U	ND< 359	U	ND< 320	U	ND< 313	U	ND< 344	U	ND< 312	U	ND< 306	U	ND< 358	U	ND< 344	U	ND< 357	U	ND< 344	U	ND< 306	U	ND< 310	U	ND< 384	U
Hexachlorobenzene	**1200**	ND< 315	U	ND< 359	U	ND< 320	U	ND< 313	U	ND< 344	U	ND< 312	U	ND< 306	U	ND< 358	U	ND< 344	U	ND< 357	U	ND< 344	U	ND< 306	U	ND< 310	U	ND< 384	U
Hexachlorobutadiene		ND< 315	U	ND< 359	U	ND< 320	U	ND< 313	U	ND< 344	U	ND< 312	U	ND< 306	U	ND< 358	U	ND< 344	U	ND< 357	U	ND< 344	U	ND< 306	U	ND< 310	U	ND< 384	U
Hexachlorocyclopentadiene		ND< 315	U	ND< 359	U	ND< 320	U	ND< 313	U	ND< 344	U	ND< 312	U	ND< 306	U	ND< 358	U	ND< 344	U	ND< 357	U	ND< 344	U	ND< 306	U	ND< 310	U	ND< 384	U
Hexachloroethane		ND< 315	U	ND< 359	U	ND< 320	U	ND< 313	U	ND< 344	U	ND< 312	U	ND< 306	U	ND< 358	U	ND< 344	U	ND< 357	U	ND< 344	U	ND< 306	U	ND< 310	U	ND< 384	U
Indeno(1,2,3-C,D)Pyrene	**500**	ND< 315	U	ND< 359	U	210	J	ND< 313	U	ND< 344	U	ND< 312	U	ND< 306	U	**677**		287	J	ND< 357	U	ND< 344	U	**2040**		**567**		**532**	
Isophorone		ND< 315	U	ND< 359	U	ND< 320	U	ND< 313	U	ND< 344	U	ND< 312	U	ND< 306	U	ND< 358	U	ND< 344	U	ND< 357	U	ND< 344	U	ND< 306	U	ND< 310	U	ND< 384	U
Naphthalene	100000	ND< 315	U	ND< 359	U	ND< 320	U	ND< 313	U	ND< 344	U	ND< 312	U	ND< 306	U	691		327	J	ND< 357	U	ND< 344	U	ND< 306	U	ND< 310	U	ND< 384	U
Nitrobenzene		ND< 315	U	ND< 359	U	ND< 320	U	ND< 313	U	ND< 344	U	ND< 312	U	ND< 306	U	ND< 358	U	ND< 344	U	ND< 357	U	ND< 344	U	ND< 306	U	ND< 310	U	ND< 384	U
N-Nitrosodi-N-Propylamine		ND< 315	U	ND< 359	U	ND< 320	U	ND< 313	U	ND< 344	U	ND< 312	U	ND< 306	U	ND< 358	U	ND< 344	U	ND< 357	U	ND< 344	U	ND< 306	U	ND< 310	U	ND< 384	U
N-Nitrosodiphenylamine		ND< 315	U	ND< 359	U	ND< 320	U	ND< 313	U	ND< 344	U	ND< 312	U	ND< 306	U	ND< 358	U	ND< 344	U	ND< 357	U	ND< 344	U	ND< 306	U	ND< 310	U	ND< 384	U
Pentachlorophenol	6700	ND< 630	U	ND< 718	U	ND< 641	U	ND< 626	U	ND< 687	U	ND< 624	U	ND< 611	U	ND< 716	U	ND< 689	U	ND< 713	U	ND< 688	U	ND< 612	U	ND< 619	U	ND< 768	U
Phenanthrene	100000	ND< 315	U	ND< 359	U	401		ND< 313	U	ND< 344	U	ND< 312	U	ND< 306	U	1050		607		197	J	ND< 344	U	1730		1010		860	
Phenol	100000	ND< 315	U	ND< 359	U	ND< 320	U	ND< 313	U	ND< 344	U	ND< 312	U	ND< 306	U	ND< 358	U	ND< 344	U	ND< 357	U	ND< 344	U	ND< 306	U	ND< 310	U	ND< 384	U
Pyrene	100000	ND< 315	U	ND< 359	U	609		ND< 313	U	ND< 344	U	ND< 312	U	ND< 306	U	1370		671		211	J	ND< 344	U	3320		1080		1240	

NOTES:

1. Soil sample analytical results are compared to the New York State Department of Environmental Conservation (NYSDEC) Title 6 of the official compilation of New York Codes, Rules, and Regulations (NYCRR) Part 375 Restricted Residential Soil Cleanup Objectives (RRSCOs).
2. RRSCO exceedances are in bold and highlighted yellow.
3. ND = Not Detected
4. Results shown as "ND" with Reporting Limits exceeding RRSCOs are in bold.
5. SVOCs = Semi-Volatile Organic Compounds
6. µg/kg = micrograms per kilogram.
7. Qualifier (Q) definitions are provided in the official lab reports.

TABLE 1B: Semi Volatile Organic Compounds (SVOCs) in Soil
AOC-1 - Power House and Former Coal Storage Area
Soil Sample Results (non-QA/QC)
Hudson River Psychiatric Center - North BCP Site, Poughkeepsie, NY
PVE Sheffler File #560909

	Date Sampled	12/15/2014		11/25/2014		12/15/2014		11/25/2014		12/15/2014	
	Location	PH-SS-8		PH-SS-9		PH-SS-9		PH-SS-10		PH-SS-10	
	Sample ID	20141215		PH-SS-9 (0-2")		PH-SS-9 2-24"		PH-SS-10 (0-2")		PH-SS-10 2-24"	
Analyte	RRSCOs	Result	Q	Result	Q	Result	Q	Result	Q	Result	Q
SVOCs (µg/kg)											
1,2,4,5-Tetrachlorobenzene		ND< 335	U	ND< 340	U	ND< 331	U	ND< 326	U	ND< 332	U
1,2,4-Trichlorobenzene		ND< 335	U	ND< 340	U	ND< 331	U	ND< 326	U	ND< 332	U
1,2-Dichlorobenzene	100000	ND< 335	U	ND< 340	U	ND< 331	U	ND< 326	U	ND< 332	U
1,3-Dichlorobenzene	49000	ND< 335	U	ND< 340	U	ND< 331	U	ND< 326	U	ND< 332	U
1,4-Dichlorobenzene	13000	ND< 335	U	ND< 340	U	ND< 331	U	ND< 326	U	ND< 332	U
2,2-Oxybis(2-Chloropropane)		ND< 335	U	ND< 340	U	ND< 331	U	ND< 326	U	ND< 332	U
2,3,4,6-Tetrachlorophenol		ND< 335	U	ND< 340	U	ND< 331	U	ND< 326	U	ND< 332	U
2,4,5-Trichlorophenol		ND< 669	U	ND< 680	U	ND< 662	U	ND< 652	U	ND< 664	U
2,4,6-Trichlorophenol		ND< 335	U	ND< 340	U	ND< 331	U	ND< 326	U	ND< 332	U
2,4-Dichlorophenol		ND< 335	U	ND< 340	U	ND< 331	U	ND< 326	U	ND< 332	U
2,4-Dimethylphenol		ND< 335	U	ND< 340	U	ND< 331	U	ND< 326	U	ND< 332	U
2,4-Dinitrophenol		ND< 669	U	ND< 680	U	ND< 662	U	ND< 652	U	ND< 664	U
2,4-Dinitrotoluene		ND< 335	U	ND< 340	U	ND< 331	U	ND< 326	U	ND< 332	U
2,6-Dinitrotoluene		ND< 335	U	ND< 340	U	ND< 331	U	ND< 326	U	ND< 332	U
2-Chloronaphthalene		ND< 335	U	ND< 340	U	ND< 331	U	ND< 326	U	ND< 332	U
2-Chlorophenol		ND< 335	U	ND< 340	U	ND< 331	U	ND< 326	U	ND< 332	U
2-Methylnaphthalene		ND< 335	U	248	J	365		2410		428	
2-Methylphenol (O-Cresol)	100000	ND< 335	U	ND< 340	U	ND< 331	U	ND< 326	U	ND< 332	U
2-Nitroaniline		ND< 669	U	ND< 680	U	ND< 662	U	ND< 652	U	ND< 664	U
2-Nitrophenol		ND< 335	U	ND< 340	U	ND< 331	U	ND< 326	U	ND< 332	U
3,3'-Dichlorobenzidine		ND< 335	U	ND< 340	U	ND< 331	U	ND< 326	U	ND< 332	U
3-Methylphenol	100000	ND< 335	U	ND< 340	U	ND< 331	U	ND< 326	U	ND< 332	U
3-Nitroaniline		ND< 669	U	ND< 680	U	ND< 662	U	ND< 652	U	ND< 664	U
4,6-Dinitro-2-Methylphenol		ND< 669	U	ND< 680	U	ND< 662	U	ND< 652	U	ND< 664	U
4-Bromophenyl Phenyl Ether		ND< 335	U	ND< 340	U	ND< 331	U	ND< 326	U	ND< 332	U
4-Chloro-3-Methylphenol		ND< 335	U	ND< 340	U	ND< 331	U	ND< 326	U	ND< 332	U
4-Chloroaniline		ND< 335	U	ND< 340	U	ND< 331	U	ND< 326	U	ND< 332	U
4-Chlorophenyl Phenyl Ether		ND< 335	U	ND< 340	U	ND< 331	U	ND< 326	U	ND< 332	U
4-Nitroaniline		ND< 669	U	ND< 680	U	ND< 662	U	ND< 652	U	ND< 664	U
4-Nitrophenol		ND< 669	U	ND< 680	U	ND< 662	U	ND< 652	U	ND< 664	U
Acenaphthene	100000	ND< 335	U	ND< 340	U	ND< 331	U	ND< 326	U	ND< 332	U
Acenaphthylene	100000	ND< 335	U	ND< 340	U	ND< 331	U	ND< 326	U	ND< 332	U
Acetophenone		ND< 335	U	ND< 340	U	ND< 331	U	ND< 326	U	ND< 332	U
Anthracene	100000	210	J	ND< 340	U	ND< 331	U	ND< 326	U	ND< 332	U
Atrazine		ND< 335	U	ND< 340	U	ND< 331	U	ND< 326	U	ND< 332	U
Benzaldehyde		ND< 335	U	ND< 340	U	ND< 331	U	ND< 326	U	ND< 332	U
Benzo(A)Anthracene	**1000**	616		352		ND< 331	U	397		304	J
Benzo(A)Pyrene	**1000**	556		299	J	ND< 331	U	233	J	226	J
Benzo(B)Fluoranthene	**1000**	543		350		ND< 331	U	480		393	
Benzo(G,H,I)Perylene	100000	388		203	J	ND< 331	U	182	J	ND< 332	U
Benzo(K)Fluoranthene	**3900**	452		269	J	ND< 331	U	278	J	217	J
Benzyl Butyl Phthalate		ND< 335	U	ND< 340	U	ND< 331	U	ND< 326	U	ND< 332	U
Biphenyl (Diphenyl)		ND< 335	U	ND< 340	U	ND< 331	U	193	J	ND< 332	U
Bis(2-Chloroethoxy) Methane		ND< 335	U	ND< 340	U	ND< 331	U	ND< 326	U	ND< 332	U
Bis(2-Chloroethyl) Ether (2-Chloroethyl Ether)		ND< 335	U	ND< 340	U	ND< 331	U	ND< 326	U	ND< 332	U
Bis(2-Ethylhexyl) Phthalate		ND< 335	U	ND< 340	U	ND< 331	U	ND< 326	U	ND< 332	U
Caprolactam		ND< 335	U	ND< 340	U	ND< 331	U	ND< 326	U	ND< 332	U
Carbazole		ND< 335	U	ND< 340	U	ND< 331	U	ND< 326	U	ND< 332	U
Chrysene	**3900**	655		396		ND< 331	U	641		431	
Dibenz(A,H)Anthracene	**330**	**ND< 335**	**U**	**ND< 340**	**U**	**ND< 331**	**U**	ND< 326	U	**ND< 332**	**U**
Dibenzofuran	59000	ND< 335	U	ND< 340	U	ND< 331	U	721		ND< 332	U
Diethyl Phthalate		ND< 335	U	ND< 340	U	ND< 331	U	ND< 326	U	ND< 332	U
Dimethyl Phthalate		ND< 669	U	ND< 680	U	ND< 662	U	ND< 652	U	ND< 664	U
Di-N-Butyl Phthalate		ND< 335	U	ND< 340	U	ND< 331	U	ND< 326	U	ND< 332	U
Di-N-Octylphthalate		ND< 335	U	ND< 340	U	ND< 331	U	ND< 326	U	ND< 332	U
Fluoranthene	100000	1130		630		ND< 331	U	574		523	
Fluorene	100000	ND< 335	U	ND< 340	U	ND< 331	U	ND< 326	U	ND< 332	U
Hexachlorobenzene	**1200**	ND< 335	U	ND< 340	U	ND< 331	U	ND< 326	U	ND< 332	U
Hexachlorobutadiene		ND< 335	U	ND< 340	U	ND< 331	U	ND< 326	U	ND< 332	U
Hexachlorocyclopentadiene		ND< 335	U	ND< 340	U	ND< 331	U	ND< 326	U	ND< 332	U
Hexachloroethane		ND< 335	U	ND< 340	U	ND< 331	U	ND< 326	U	ND< 332	U
Indeno(1,2,3-C,D)Pyrene	**500**	440		250	J	ND< 331	U	219	J	183	J
Isophorone		ND< 335	U	ND< 340	U	ND< 331	U	ND< 326	U	ND< 332	U
Naphthalene	100000	ND< 335	U	ND< 340	U	257	J	1660		296	J
Nitrobenzene		ND< 335	U	ND< 340	U	ND< 331	U	ND< 326	U	ND< 332	U
N-Nitrosodi-N-Propylamine		ND< 335	U	ND< 340	U	ND< 331	U	ND< 326	U	ND< 332	U
N-Nitrosodiphenylamine		ND< 335	U	ND< 340	U	ND< 331	U	ND< 326	U	ND< 332	U
Pentachlorophenol	6700	ND< 669	U	ND< 680	U	ND< 662	U	ND< 652	U	ND< 664	U
Phenanthrene	100000	834		411		230	J	1630		644	
Phenol	100000	ND< 335	U	ND< 340	U	ND< 331	U	ND< 326	U	ND< 332	U
Pyrene	100000	1000		541		ND< 331	U	539		440	

NOTES:

1. Soil sample analytical results are compared to the New York State Department of Environmental Conservation (NYSDEC) Title 6 of the official compilation of New York Codes, Rules, and Regulations (NYCRR) Part 375 Restricted Residential Soil Cleanup Objectives (RRSCOs).
2. RRSCO exceedances are in bold and highlighted yellow.
3. ND = Not Detected
4. Results shown as "ND" with Reporting Limits exceeding RRSCOs are in bold.
5. SVOCs = Semi-Volatile Organic Compounds
6. µg/kg = micrograms per kilogram.
7. Qualifier (Q) definitions are provided in the official lab reports.

Table 1C – Total Metals in Soil – AOC-1

TABLE 1C: Total Metals in Soil

AOC-1 - Power House and Former Coal Storage Area

Soil Sample Results (non-QA/QC)

Hudson River Psychiatric Center - North BCP Site, Poughkeepsie, NY

PVE Sheffler File #560909

	Date Sampled	5/7/2014		5/7/2014		5/7/2014		5/7/2014		5/7/2014		5/7/2014		5/7/2014		5/8/2014	
	Location	PH-1		PH-1		PH-1		PH-2		PH-2		PH-2		PH-3		PH-3	
	Sample ID	PH-1 0-2"		PH-1 1-2'		PH-1 2-3.25'		PH-2 0-2"		PH-2 1-2'		PH-2 7-9'		PH-3 0-2"		PH-3 1-2	
Analyte	RRSCOs	Result	Q	Result	Q	Result	Q	Result	Q	Result	Q	Result	Q	Result	Q	Result	Q
Metals (mg/kg)																	
Aluminum		14100		5390		1360		13300		4660		14500	D	14400		16600	
Antimony		ND< 7.16	U	ND< 6.43	U	ND< 6.34	U	ND< 7.06	U	ND< 6.45	U	ND< 7.05	U	ND< 6.38	U	ND< 6.94	U
Arsenic	**16**	8.45	D	14.3		8.91		11.9		10.2		**18.4**		12.4		10.0	
Barium	**400**	34.0		23.4		10.0	J	35.5		23.0		24.5	D	52.5		75.2	
Beryllium	72	0.629		ND< 0.536	U	ND< 0.528	U	0.849		0.346	J	0.560	J	0.665		0.683	
Cadmium	4.3	ND< 0.597	U	ND< 0.536	U	ND< 1.59	U	ND< 0.588	U	ND< 0.538	U	ND< 0.587	U	ND< 0.531	U	ND< 0.578	U
Calcium		42400	D	140000		185000		55500		138000		648		9880		13100	
Chromium, Hexavalent	110	ND< 1.1	U	ND< 1.1	U	ND< 1.0	U	ND< 1.1	U	ND< 1.0	U	ND< 1.1	U	ND< 1.2	U	ND< 1.2	U
Chromium, Total		16.1		9.66		5.15		17.8		9.29		17.8	D	17.2		18.0	
Cobalt		17.6		6.97		3.40	J	18.9		6.44		33.3	D	11.8		11.7	
Copper	270	55.5		142		8.78		59.5		16.4		94.9		32.4		31.2	
Cyanide	27	ND< 0.55	U	ND< 0.53	U	ND< 0.52	U	ND< 0.56	U	ND< 0.52	U	ND< 0.57	U	ND< 0.57	U	ND< 0.59	U
Cyanide	27																
Iron		30400		23300		5770		28300		12200		44000	D	28800		48300	
Lead	**400**	46.7	D	28.6		1.88		63.6		8.05		25.3	D	57.6		40.0	
Magnesium		23200	D	81500		107000		31100		77600		6970	DM	9060		10200	
Manganese	**2000**	1000	M	329		167		1030		375		915	DM	732		414	
Mercury	**0.81**	0.125	DM	0.0135	J	0.0152	J	ND< 0.0187	U	0.0567		0.0707		0.0805		0.0547	
Nickel	310	40.7		14.7		7.87		39.4		13.8		70.1	D	27.9		29.5	
Potassium		1240		1140		878		1470		1270		1040		859		765	
Selenium	180	ND< 1.19	U	ND< 3.21	U	ND< 3.17	U	ND< 1.18	U	ND< 1.08	U	0.892	JB	ND< 1.06	U	1.13	J
Silver	180	ND< 1.19	U	ND< 3.21	U	ND< 1.06	U	ND< 1.18	U	ND< 1.08	U	1.24		ND< 1.06	U	ND< 1.16	U
Sodium		ND< 299	U	ND< 268	U	147	J	ND< 294	U	ND< 269	U	ND< 294	U	ND< 266	U	479	
Thallium		ND< 2.99	U	ND< 2.68	U	ND< 2.64	U	1.48	J	ND< 2.69	U	2.12	J	1.43	J	ND< 2.89	U
Vanadium		19.0		13.1		7.02		19.7		10.8		29.3		21.9		21.7	
Zinc	10000	169		22.4		3.69	J	153		29.1		236		92.9		98.6	

NOTES:

1. Soil sample analytical results are compared to the New York State Department of Environmental Conservation (NYSDEC) Title 6 of the official compilation of New York Codes, Rules, and Regulations (NYCRR) Part 375 Restricted Residential Soil Cleanup Objectives (RRSCOs).
2. RRSCO exceedances are in bold and highlighted yellow.
3. ND = Not Detected
4. Results shown as "ND" with Reporting Limits exceeding RRSCOs are in bold.
5. mg/kg = milligrams per kilogram.
6. Qualifier (Q) definitions are provided in the official lab reports.

TABLE 1C: Total Metals in Soil

AOC-1 - Power House and Former Coal Storage Area

Soil Sample Results (non-QA/QC)

Hudson River Psychiatric Center - North BCP Site, Poughkeepsie, NY

PVE Sheffler File #560909

	Date Sampled	5/8/2014		5/7/2014		5/8/2014		5/8/2014		5/7/2014		5/8/2014		5/8/2014		5/8/2014	
	Location	PH-3		PH-4		PH-4		PH-4		PH-5		PH-5		PH-5		PH-6	
	Sample ID	PH-3 2-3'		PH-4 0-2"		PH-4 1-2'		PH-4 11-12'		PH-5 0-2"		PH-5 1-2'		PH-5 6-7'		PH-6 1-2'	
Analyte	RRSCOs	Result	Q	Result	Q	Result	Q	Result	Q	Result	Q	Result	Q	Result	Q	Result	Q
Metals (mg/kg)																	
Aluminum		11100		11700		11800		14900		12700		14800		13500		13800	
Antimony		ND< 6.33	U	ND< 6.82	U	ND< 7.29	U	ND< 6.24	U	ND< 6.70	U	ND< 6.36	U	ND< 6.95	U	ND< 6.72	U
Arsenic	**16**	8.28		9.12		10.3		**18.6**		11.7		14.9		**19.3**		6.87	
Barium	**400**	32.0		42.9		38.5		27.9		75.6		42.6		42.9		39.3	
Beryllium	72	0.485	J	0.542	J	0.550	J	0.484	J	0.589		0.663		0.542	J	0.350	J
Cadmium	4.3	ND< 0.528	U	ND< 0.569	U	ND< 0.607	U	0.825		0.557	J	ND< 0.530	U	ND< 0.579	U	ND< 0.560	U
Calcium		16500		20800		8050		15100		5670		9320		20600		77300	
Chromium, Hexavalent	110	ND< 1.1	U	ND< 1.1	U	ND< 1.1	U	ND< 1.2	U	ND< 1.1	U	ND< 1.2	U	ND< 1.2	U	ND< 1.1	U
Chromium, Total		13.9		14.5		16.3		16.8		16.6		17.1		17.2		17.7	
Cobalt		9.78		9.25		10.1		16.6		11.2		11.1		12.7		11.4	
Copper	270	22.7		28.0		26.3		69.8		34.7		32.5		41.6		28.0	
Cyanide	27	ND< 0.56	U	0.630		ND< 0.57	U	ND< 0.58	U	ND< 0.55	U	ND< 0.60	U	ND< 0.59	U	ND< 0.56	U
Cyanide	27																
Iron		20700		21200		29400		33400		26500		30200		29600		23400	
Lead	**400**	36.8		112		35.5		48.0		**415**		52.2		73.9		10.7	
Magnesium		11500		14900		6800		14500		6320		8430		12400		40400	
Manganese	**2000**	352		569		353		1170		667		515		1140		610	
Mercury	**0.81**	0.0412		0.234		0.0472		0.0510		0.0663		0.0694		0.0758		ND< 0.0217	U
Nickel	310	21.3		21.7		22.4		46.2		27.3		26.1		30.0		19.4	
Potassium		617		754		661		1040		758		744		1120		2460	
Selenium	180	ND< 1.06	U	ND< 2.27	U	ND< 1.21	U	ND< 1.04	U	ND< 1.12	U	0.562	J	ND< 1.16	U	ND< 1.12	U
Silver	180	ND< 1.06	U	ND< 1.14	U	ND< 1.21	U	ND< 1.04	U	ND< 1.12	U	ND< 1.06	U	ND< 1.16	U	ND< 1.12	U
Sodium		344		ND< 284	U	223	J	ND< 260	U	ND< 279	U	171	J	174	J	227	J
Thallium		ND< 2.64	U	ND< 2.84	U	ND< 3.04	U	ND< 2.60	U	ND< 2.79	U	ND< 2.65	U	ND< 2.89	U	2.05	J
Vanadium		18.2		19.0		19.0		23.8		19.5		21.4		23.9		27.1	
Zinc	10000	62.7		82.3		71.0		304		112		89.6		140		54.7	

NOTES:

1. Soil sample analytical results are compared to the New York State Department of Environmental Conservation (NYSDEC) Title 6 of the official compilation of New York Codes, Rules, and Regulations (NYCRR) Part 375 Restricted Residential Soil Cleanup Objectives (RRSCOs).
2. RRSCO exceedances are in bold and highlighted yellow.
3. ND = Not Detected
4. Results shown as "ND" with Reporting Limits exceeding RRSCOs are in bold.
5. mg/kg = milligrams per kilogram.
6. Qualifier (Q) definitions are provided in the official lab reports.

TABLE 1C: Total Metals in Soil

AOC-1 - Power House and Former Coal Storage Area

Soil Sample Results (non-QA/QC)

Hudson River Psychiatric Center - North BCP Site, Poughkeepsie, NY

PVE Sheffler File #560909

	Date Sampled	5/8/2014		7/17/2014		7/17/2014		7/17/2014		7/17/2014		7/17/2014		7/17/2014		5/7/2014	
	Location	PH-6		PH-7		PH-7		PH-7		PH-8		PH-8		PH-8		PH-9	
	Sample ID	PH-6 4.5-5.5'		PH-7 0-2"		PH-7 1-2'		PH-7 4-4.75		PH-8 0-2"		PH-8 1-2'		PH-8 2.5-3.5'		PH-9 0-2"	
Analyte	RRSCOs	Result	Q	Result	Q	Result	Q	Result	Q	Result	Q	Result	Q	Result	Q	Result	Q
Metals (mg/kg)																	
Aluminum		14300		9290		11800		14400		12800		13300		16000		16300	
Antimony		ND< 6.98	U	6.43		6.03	J	5.88	J	ND< 6.53	U	ND< 6.59	U	3.44	J	ND< 7.45	U
Arsenic	**16**	7.19		**199**		**21.5**		**42.8**		**27.4**		**22.2**		5.13		**17.8**	
Barium	**400**	39.8		39.8		38.7		37.7		39.4		42.0		43.6		37.4	
Beryllium	72	0.362	J	0.669		0.330	J	0.430	J	0.401	J	0.529	J	0.769		0.617	J
Cadmium	4.3	ND< 0.582	U	0.524		ND< 0.609	U	ND< 0.577	U	ND< 0.544	U	ND< 0.549	U	ND< 0.548	U	0.342	J
Calcium		77600		30300		901		17000		3480		1040		1280		496	
Chromium, Hexavalent	110	ND< 1.3	U	ND< 1.1	U	ND< 1.2	U	ND< 1.2	U	ND< 1.1	U	ND< 1.1	U	ND< 1.2	U	ND< 1.2	U
Chromium, Total		19.1		11.2		18.9		20.0		18.5		18.4		34.7		19.9	
Cobalt		12.1		22.9		4.73	J	16.4		12.3		11.9		11.7		14.5	
Copper	270	29.5		57.8		44.8		48.2		56.0		48.4		51.8		51.6	
Cyanide	27	ND< 0.63	U	ND< 0.57	U	ND< 0.58	U	ND< 0.58	U	ND< 0.55	U	ND< 0.56	U	ND< 0.59	U	ND< 0.58	U
Cyanide	27																
Iron		24300		43300		50400		47100		42400		42700		34400		35000	
Lead	**400**	10.2		20.0		14.7		16.0		40.6		17.6		13.9		21.1	
Magnesium		40000		14400		4340		12100		7090		5760		5960		6440	
Manganese	**2000**	552		895		87.9		1560		756		761		428		862	
Mercury	**0.81**	ND< 0.0229	U	0.0527		0.0300		0.0291		0.0339		0.0390		0.0280		0.0929	
Nickel	310	20.7		59.9		19.6		33.4		30.6		24.6		30.8		36.0	
Potassium		2580		1230		1250		1180		969		1260		1320		833	
Selenium	180	ND< 1.16	U	21.4		11.8		11.8		9.03		9.47		7.16		1.19	J
Silver	180	ND< 1.16	U	ND< 1.04	U	0.654	J	1.04	J	ND< 1.09	U	ND< 1.10	U	ND< 1.10	U	ND< 1.24	U
Sodium		243	J	284		ND< 304	U	ND< 289	U	168	J	155	J	ND< 274	U	ND< 311	U
Thallium		1.60	J	ND< 2.59	U	ND< 3.04	U	ND< 2.89	U	ND< 2.72	U	1.49	J	ND< 2.74	U	ND< 3.11	U
Vanadium		27.7		31.0		16.9		21.3		18.9		18.5		17.8		20.5	
Zinc	10000	56.3		213		84.0		144		94.5		96.1		98.9		150	

NOTES:

1. Soil sample analytical results are compared to the New York State Department of Environmental Conservation (NYSDEC) Title 6 of the official compilation of New York Codes, Rules, and Regulations (NYCRR) Part 375 Restricted Residential Soil Cleanup Objectives (RRSCOs).
2. RRSCO exceedances are in bold and highlighted yellow.
3. ND = Not Detected
4. Results shown as "ND" with Reporting Limits exceeding RRSCOs are in bold.
5. mg/kg = milligrams per kilogram.
6. Qualifier (Q) definitions are provided in the official lab reports.

TABLE 1C: Total Metals in Soil

AOC-1 - Power House and Former Coal Storage Area

Soil Sample Results (non-QA/QC)

Hudson River Psychiatric Center - North BCP Site, Poughkeepsie, NY

PVE Sheffler File #560909

	Date Sampled	5/8/2014		5/8/2014		5/7/2014		7/15/2014		7/15/2014		7/15/2014		5/7/2014		5/12/2014	
	Location	PH-9		PH-9		PH-10		PH-10		PH-10		PH-10		PH-11		PH-11	
	Sample ID	PH-9 1-2'		PH-9 7-9'		PH-10 0-2"		PH-10 0-2"		PH-10 1-2'		PH-10 12.5-14'		PH-11 0-2"		PH-11 1-2'	
Analyte	RRSCOs	Result	Q	Result	Q	Result	Q	Result	Q	Result	Q	Result	Q	Result	Q	Result	Q
Metals (mg/kg)																	
Aluminum		11500		12800		12600		8300		12300		9560		10900		10700	
Antimony		6.70	J	ND< 7.19	U	ND< 6.71	U	ND< 6.61	U	ND< 7.39	U	5.84	J	ND< 7.72	U	ND< 7.10	U
Arsenic	**16**	**30.3**		**17.0**		13.5		9.55		5.76		13.7		10.3		9.19	
Barium	**400**	29.9		45.7		49.7		29.4		33.7		26.9		35.0		35.8	
Beryllium	72	0.559	J	0.671		0.590		0.426	J	0.548	J	0.562	J	0.551	J	0.529	J
Cadmium	4.3	0.405	J	ND< 0.600	U	ND< 0.559	U	ND< 0.551	U	ND< 0.616	U	0.405	J	ND< 0.643	U	ND< 0.592	U
Calcium		2080		925	D	7360		48600		8380		481		16700		14100	
Chromium, Hexavalent	110	ND< 1.1	U	ND< 1.2	U	ND< 1.2	U	ND< 1.2	U	ND< 1.2	U	ND< 1.1	U	ND< 1.2	U	ND< 1.1	U
Chromium, Total		17.9		17.3		15.1		10.8		14.9		14.8		13.7		17.8	
Cobalt		14.0		10.3	D	22.0		7.04		8.17		13.8		8.63		10.4	
Copper	270	76.2		57.5		38.0		20.0		23.0		53.4		27.3		24.7	
Cyanide	27	ND< 0.56	U	ND< 0.59	U	ND< 0.59	U	ND< 0.60	U	ND< 0.59	U	ND< 0.54	U	ND< 0.59	U	ND< 0.57	U
Cyanide	27																
Iron		39000		37500		27600		16800		24800		44000		20900		21200	
Lead	**400**	34.6		29.7		31.5		21.2		20.5		25.6		39.3		63.0	
Magnesium		4530		4520	DM	7460		30500		7780		4110		12500		10600	
Manganese	**2000**	1390		766	DM	1130		331		318		1570		397		458	
Mercury	**0.81**	0.169		0.0563		0.117		0.0690		0.0341		0.0938		0.0702		0.0364	
Nickel	310	49.5		39.5		40.8		16.4		24.3		33.2		19.9		21.8	
Potassium		919		992		735		640		602		1180		686		646	
Selenium	180	2.22		1.28		ND< 1.12	U	0.584	J	0.784	J	2.82		ND< 1.29	U	ND< 1.18	U
Silver	180	ND< 1.24	U	ND< 1.20	U	ND< 1.12	U	ND< 1.10	U	ND< 1.23	U	ND< 1.14	U	ND< 1.29	U	ND< 1.18	U
Sodium		ND< 310	U	ND< 300	U	178	J	ND< 275	U	ND< 308	U	ND< 285	U	ND< 322	U	ND< 296	U
Thallium		2.15	J	ND< 3.00	U	ND< 2.80	U	ND< 2.75	U	ND< 3.08	U	ND< 2.85	U	ND< 3.22	U	ND< 2.96	U
Vanadium		27.3		18.9		18.9		17.4		17.1		17.2		17.5		26.4	
Zinc	10000	269		137	D	109		47.7		67.6		131		73.2		71.2	

NOTES:

1. Soil sample analytical results are compared to the New York State Department of Environmental Conservation (NYSDEC) Title 6 of the official compilation of New York Codes, Rules, and Regulations (NYCRR) Part 375 Restricted Residential Soil Cleanup Objectives (RRSCOs).
2. RRSCO exceedances are in bold and highlighted yellow.
3. ND = Not Detected
4. Results shown as "ND" with Reporting Limits exceeding RRSCOs are in bold.
5. mg/kg = milligrams per kilogram.
6. Qualifier (Q) definitions are provided in the official lab reports.

TABLE 1C: Total Metals in Soil

AOC-1 - Power House and Former Coal Storage Area

Soil Sample Results (non-QA/QC)

Hudson River Psychiatric Center - North BCP Site, Poughkeepsie, NY

PVE Sheffler File #560909

	Date Sampled	5/12/2014		5/7/2014		5/12/2014		7/15/2014		7/15/2014		7/15/2014		7/15/2014		7/15/2014	
	Location	PH-11		PH-12		PH-12		PH-14		PH-14		PH-14		PH-15		PH-15	
	Sample ID	PH-11 9-10.75'		PH-12 0-2"		PH-12 1-2'		PH-14 0-2"		PH-14 1-2'		PH-14 9-11		PH-15 0-2"		PH-15 1-2'	
Analyte	RRSCOs	Result	Q	Result	Q	Result	Q	Result	Q	Result	Q	Result	Q	Result	Q	Result	Q
Metals (mg/kg)																	
Aluminum		7120		12200		13900		11300		7300		4930		10400		9620	
Antimony		ND< 7.16	U	ND< 6.17	U	ND< 9.37	U	4.96	J	ND< 7.65	U	7.47		4.91	J	4.96	J
Arsenic	**16**	**62.3**		4.38	D	9.90		15.5	D	10.9		**29.7**		**28.4**		**32.8**	
Barium	**400**	28.8		24.7		85.9		34.7		32.0		18.6		30.3		23.2	
Beryllium	72	0.563	J	0.309	J	0.523	J	0.525	J	0.390	J	0.483	J	0.456	J	0.344	J
Cadmium	4.3	ND< 0.597	U	ND< 0.514	U	ND< 0.780	U	ND< 0.541	U	ND< 0.637	U	0.653		ND< 0.541	U	ND< 0.546	U
Calcium		327		25100	D	1610		3390	M	88900		ND< 294	U	1910		1300	
Chromium, Hexavalent	110	ND< 1.1	U	ND< 1.0	U	ND< 1.2	U										
Chromium, Total		15.8		12.4		19.1		16.3	D	11.0		11.3		14.8		14.7	
Cobalt		4.75	J	7.89		15.5		13.9		7.45		10.6		11.3		9.41	
Copper	270	78.1		20.7	D	47.1		67.3	D	21.1		84.4		47.5		36.9	
Cyanide	27	ND< 0.54	U	ND< 0.52	U	ND< 0.60	U										
Cyanide	27																
Iron		66800		23400		36500		41300		19700		27200		30600		33800	
Lead	**400**	66.6		9.74	D	85.6		29.6	D	21.8		34.3		30.4		22.2	
Magnesium		3280		8740		6300		5620	M	46100		1340		4350		4890	
Manganese	**2000**	70.0		658	M	**3600**		**2170**		606		477		1880		1750	
Mercury	**0.81**	0.156		0.0135	J	0.0244	J	0.111	D	0.0755		0.333		0.125		0.220	
Nickel	310	54.8		21.3		35.0		36.5		18.0		40.5		30.4		32.0	
Potassium		1060		838		697		749	D	619		910		688		736	
Selenium	180	8.34		ND< 1.03	U	ND< 1.56	U	2.28	D	1.38		2.14		2.43		2.33	
Silver	180	ND< 1.19	U	ND< 1.03	U	ND< 1.56	U	ND< 1.08	U	0.766	J	ND< 1.17	U	ND< 1.08	U	ND< 1.09	U
Sodium		ND< 298	U	ND< 257	U	ND< 390	U	ND< 271	U	ND< 319	U	ND< 294	U	ND< 270	U	ND< 273	U
Thallium		ND< 2.98	U	ND< 2.57	U	4.60		1.43	J	ND< 3.19	U	ND< 2.94	U	ND< 2.70	U	ND< 2.73	U
Vanadium		52.3		12.1		22.5		21.2		23.3		23.4		20.6		20.0	
Zinc	10000	220		90.1	D	84.1		108		59.7		389		93.4		87.3	

NOTES:

1. Soil sample analytical results are compared to the New York State Department of Environmental Conservation (NYSDEC) Title 6 of the official compilation of New York Codes, Rules, and Regulations (NYCRR) Part 375 Restricted Residential Soil Cleanup Objectives (RRSCOs).
2. RRSCO exceedances are in bold and highlighted yellow.
3. ND = Not Detected
4. Results shown as "ND" with Reporting Limits exceeding RRSCOs are in bold.
5. mg/kg = milligrams per kilogram.
6. Qualifier (Q) definitions are provided in the official lab reports.

TABLE 1C: Total Metals in Soil

AOC-1 - Power House and Former Coal Storage Area

Soil Sample Results (non-QA/QC)

Hudson River Psychiatric Center - North BCP Site, Poughkeepsie, NY

PVE Sheffler File #560909

	Date Sampled	7/15/2014		7/15/2014		7/16/2014		7/16/2014		7/16/2014		7/16/2014		7/16/2014		7/16/2014	
	Location	PH-15		PH-16		PH-16		PH-16		PH-17		PH-17		PH-17		PH-18	
	Sample ID	PH-15 10-12		PH-16 0-2"		PH-16 1-2'		PH-16 12-13'		PH-17 0-2"		PH-17 1-2'		PH-17 2-4'		PH-18 0-2"	
Analyte	RRSCOs	Result	Q	Result	Q	Result	Q	Result	Q	Result	Q	Result	Q	Result	Q	Result	Q
Metals (mg/kg)																	
Aluminum		13800		16800		17400		14300		9050		1350		7230		13400	
Antimony		ND< 7.16	U	4.18	J	6.44	J	ND< 7.33	U	ND< 7.38	U	ND< 6.68	U	ND< 6.56	U	5.06	J
Arsenic	**16**	4.20		11.5		**20.9**		6.32		9.97		5.60		6.28		**21.6**	
Barium	**400**	36.2		37.8		31.9		50.8		32.0		10.9	J	7.18	J	37.8	
Beryllium	72	0.584	J	0.569		0.587	J	0.457	J	0.430	J	ND< 0.556	U	0.842		0.577	
Cadmium	4.3	ND< 0.597	U	0.646		0.545	J	ND< 0.611	U	ND< 0.615	U	ND< 0.556	U	ND< 0.546	U	2.08	
Calcium		28600		1170		5600		699		71300		186000		165000		2290	
Chromium, Hexavalent	110																
Chromium, Total		17.3		18.2		22.7		17.9		12.2		5.06		5.59		16.6	
Cobalt		11.8		14.4		20.2		13.5		10.5		ND< 5.56	U	8.12		16.4	
Copper	270	28.5		43.8		51.1		41.9		32.2		7.96		35.6		56.6	
Cyanide	27																
Cyanide	27																
Iron		29400		32700		40400		31200		18900		5540		5310		32200	
Lead	**400**	12.4		19.1		19.6		14.6		43.8		8.71		6.95		21.8	
Magnesium		6310		7000		9390		6200		30200		104000		92200		5230	
Manganese	**2000**	621		129		**4990**		779		652		185		590		**2670**	
Mercury	**0.81**	0.0256		0.0620		0.104		0.0397		0.0491		0.0239		0.0159	J	0.156	
Nickel	310	26.6		34.6		53.2		27.3		23.1		6.13		21.6		48.3	
Potassium		1090		773		1070		1080		1070		986		931		932	
Selenium	180	ND< 1.19	U	2.19		0.732	J	1.80		1.04	J	ND< 1.11	U	0.651	J	2.61	
Silver	180	ND< 1.19	U	ND< 1.07	U	ND< 1.23	U	ND< 1.22	U	0.821	J	2.16		1.79		ND< 1.12	U
Sodium		ND< 298	U	ND< 269	U	ND< 308	U	ND< 305	U	ND< 307	U	141	J	ND< 273	U	ND< 279	U
Thallium		ND< 2.98	U	ND< 2.69	U	2.00	J	ND< 3.05	U	ND< 3.07	U	ND< 2.78	U	ND< 2.73	U	ND< 2.79	U
Vanadium		16.3		21.5		22.7		16.6		19.9		12.3		6.30		20.9	
Zinc	10000	87.1		174		148		91.7		84.8		ND< 6.68	U	70.5		200	

NOTES:

1. Soil sample analytical results are compared to the New York State Department of Environmental Conservation (NYSDEC) Title 6 of the official compilation of New York Codes, Rules, and Regulations (NYCRR) Part 375 Restricted Residential Soil Cleanup Objectives (RRSCOs).
2. RRSCO exceedances are in bold and highlighted yellow.
3. ND = Not Detected
4. Results shown as "ND" with Reporting Limits exceeding RRSCOs are in bold.
5. mg/kg = milligrams per kilogram.
6. Qualifier (Q) definitions are provided in the official lab reports.

TABLE 1C: Total Metals in Soil

AOC-1 - Power House and Former Coal Storage Area

Soil Sample Results (non-QA/QC)

Hudson River Psychiatric Center - North BCP Site, Poughkeepsie, NY

PVE Sheffler File #560909

	Date Sampled	7/16/2014		7/16/2014		7/16/2014		7/16/2014		7/16/2014		7/17/2014		7/17/2014		7/17/2014	
	Location	PH-18		PH-18		PH-19		PH-19		PH-19		PH-20		PH-20		PH-20	
	Sample ID	PH-18 1-2'		PH-18 9-10.5		PH-19 0-2"		PH-19 1-2'		PH-19 12-13'		PH-20 0-2"		PH-20 1-2'		PH-20 7-9'	
Analyte	RRSCOs	Result	Q	Result	Q	Result	Q	Result	Q	Result	Q	Result	Q	Result	Q	Result	Q
Metals (mg/kg)																	
Aluminum		13700		2300		12300		12000		12600		11700		13200		15600	
Antimony		4.45	J	5.84	J	ND< 7.63	U	ND< 6.92	U	ND< 6.78	U	4.06	J	3.79	J	5.47	J
Arsenic	**16**	13.5		**74.8**		12.5		7.96		11.2		9.31		7.39		7.92	
Barium	**400**	36.5		26.6		44.3		34.8		35.9		44.5		41.9		33.9	
Beryllium	72	0.507	J	ND< 0.573	U	0.590	J	0.574	J	0.535	J	0.544		0.562	J	0.517	J
Cadmium	4.3	0.378	J	ND< 0.573	U	0.461	J	ND< 0.576	U	0.452	J	ND< 0.538	U	ND< 0.570	U	ND< 0.531	U
Calcium		917		582		4060		23000		15500		10700		18900		1140	
Chromium, Hexavalent	110																
Chromium, Total		15.2		3.67		15.3		12.6		16.9		15.4		14.9		15.2	
Cobalt		11.8		ND< 5.73	U	10.8		9.96		13.9		10.9		10.1		15.5	
Copper	270	44.8		14.9		32.2		20.6		49.6		25.7		26.5		65.0	
Cyanide	27																
Cyanide	27																
Iron		26600		8650		24500		22800		28400		23800		24700		32400	
Lead	**400**	21.9		55.7		39.2		23.9		20.7		36.4		38.5		46.6	
Magnesium		5610		248	J	5430		12600		5600		8950		10900		6730	
Manganese	**2000**	1170		52.7		896		464		1090		1970		468		898	
Mercury	**0.81**	0.0980		0.167		0.0752		0.0602		0.0410		0.0387		0.0425		0.0829	
Nickel	310	35.2		12.9		29.3		22.1		40.7		26.3		23.0		30.6	
Potassium		937		1390		905		861		1280		845		874		845	
Selenium	180	7.09		2.36		1.21	J	1.10	J	ND< 1.13	U	4.11		5.38		7.03	
Silver	180	ND< 1.20	U	ND< 1.15	U	ND< 1.27	U	ND< 1.15	U	ND< 1.13	U	ND< 1.08	U	ND< 1.14	U	0.540	J
Sodium		ND< 299	U	ND< 287	U	ND< 318	U	245	J	ND< 283	U	219	J	242	J	ND< 266	U
Thallium		ND< 2.99	U	ND< 2.87	U	ND< 3.18	U	ND< 2.88	U	ND< 2.83	U	ND< 2.69	U	ND< 2.85	U	ND< 2.66	U
Vanadium		19.9		12.7		19.2		15.8		23.7		20.0		19.3		18.3	
Zinc	10000	105		26.3		84.7		67.6		140		68.5		77.8		154	

NOTES:

1. Soil sample analytical results are compared to the New York State Department of Environmental Conservation (NYSDEC) Title 6 of the official compilation of New York Codes, Rules, and Regulations (NYCRR) Part 375 Restricted Residential Soil Cleanup Objectives (RRSCOs).
2. RRSCO exceedances are in bold and highlighted yellow.
3. ND = Not Detected
4. Results shown as "ND" with Reporting Limits exceeding RRSCOs are in bold.
5. mg/kg = milligrams per kilogram.
6. Qualifier (Q) definitions are provided in the official lab reports.

TABLE 1C: Total Metals in Soil

AOC-1 - Power House and Former Coal Storage Area

Soil Sample Results (non-QA/QC)

Hudson River Psychiatric Center - North BCP Site, Poughkeepsie, NY

PVE Sheffler File #560909

	Date Sampled	7/17/2014		7/17/2014		7/17/2014		12/18/2014		12/18/2014		12/18/2014		12/18/2014		12/18/2014	
	Location	PH-21		PH-21		PH-21		PH-22		PH-22		PH-23		PH-23		PH-24	
	Sample ID	PH-21 0-2"		PH-21 1-2'		PH-21 18-19'		PH-22 2-4'		PH-22 12-14'		PH-23 2-5'		PH-23 8-10'		PH-24 2-5'	
Analyte	RRSCOs	Result	Q	Result	Q	Result	Q	Result	Q	Result	Q	Result	Q	Result	Q	Result	Q
Metals (mg/kg)																	
Aluminum		13200		12500		9520											
Antimony		4.19	J	4.10	J	7.12	J										
Arsenic	**16**	6.90		8.31		**28.2**		13.1		8.28		13.6		4.93		**31.6**	
Barium	**400**	34.9		38.3		22.3		78.6		119		46.3		63.2		40.5	
Beryllium	72	0.528	J	0.532	J	0.527	J	0.631		0.900		0.481	J	0.688		0.747	
Cadmium	4.3	ND< 0.552	U	ND< 0.601	U	0.817		ND< 0.601	U	ND< 0.676	U	ND< 0.596	U	ND< 0.639	U	ND< 0.606	U
Calcium		15000		7430		534											
Chromium, Hexavalent	110							ND< 1.1	U	ND< 1.3	U	ND< 1.2	U	ND< 1.2	U	ND< 1.2	U
Chromium, Total		14.8		14.7		11.7		19.7		26.3		16.0		20.7		10.6	
Cobalt		11.6		10.2		11.3											
Copper	270	29.1		30.8		81.3		47.9		39.6		30.3		19.5		21.3	
Cyanide	27																
Cyanide	27							ND< 0.550	U	ND< 0.502	U	0.374	J	ND< 0.390	U	0.248	J
Iron		25800		25700		27000											
Lead	**400**	45.3		57.7		27.9		25.8		17.5		39.8		15.3		49.2	
Magnesium		7030		7200		3310											
Manganese	**2000**	807		596		807		1570		783		496		1720	E	335	
Mercury	**0.81**	0.0775		0.0658		0.132		0.101		0.135		0.0339		0.0213	J	0.501	
Nickel	310	25.5		24.0		37.9		34.2		33.1		25.4		26.5		18.4	
Potassium		670		748		987											
Selenium	180	5.18		5.49		6.42		ND< 2.41	U	ND< 2.70	U	ND< 2.38	U	ND< 2.55	U	ND< 1.21	U
Silver	180	ND< 1.10	U	ND< 1.20	U	0.971	J	ND< 2.41	U	ND< 1.35	U	ND< 2.38	U	ND< 1.28	U	ND< 1.21	U
Sodium		ND< 276	U	ND< 301	U	ND< 301	U										
Thallium		ND< 2.76	U	ND< 3.01	U	ND< 3.01	U										
Vanadium		17.3		17.3		22.6											
Zinc	10000	79.8		83.7		207		116		83.5		426		84.9		38.8	

NOTES:

1. Soil sample analytical results are compared to the New York State Department of Environmental Conservation (NYSDEC) Title 6 of the official compilation of New York Codes, Rules, and Regulations (NYCRR) Part 375 Restricted Residential Soil Cleanup Objectives (RRSCOs).
2. RRSCO exceedances are in bold and highlighted yellow.
3. ND = Not Detected
4. Results shown as "ND" with Reporting Limits exceeding RRSCOs are in bold.
5. mg/kg = milligrams per kilogram.
6. Qualifier (Q) definitions are provided in the official lab reports.

TABLE 1C: Total Metals in Soil

AOC-1 - Power House and Former Coal Storage Area

Soil Sample Results (non-QA/QC)

Hudson River Psychiatric Center - North BCP Site, Poughkeepsie, NY

PVE Sheffler File #560909

	Date Sampled	12/18/2014		5/7/2014		5/7/2014		5/7/2014		5/7/2014		5/7/2014		5/7/2014		5/7/2014	
	Location	PH-24		PH-SS-1		PH-SS-1		PH-SS-1		PH-SS-2		PH-SS-2		PH-SS-2		PH-SS-3	
	Sample ID	PH-24 16-18'		PH-SS-1 0-2"		PH-SS-1 1-2'		PH-SS-1 2-3'		PH-SS-2 0-2"		PH-SS-2 1-2'		PH-SS-2 4-5'		PH-SS-3 0-2"	
Analyte	RRSCOs	Result	Q	Result	Q	Result	Q	Result	Q	Result	Q	Result	Q	Result	Q	Result	Q
Metals (mg/kg)																	
Aluminum				13400		16000		15400		7820		10500		13800		15800	
Antimony				ND< 8.86	U	ND< 6.53	U	ND< 6.51	U	ND< 7.05	U	ND< 7.01	U	ND< 6.82	U	ND< 7.22	U
Arsenic	**16**	6.68		**20.6**		**28.5**		12.8		**33.7**		**20.4**		**40.4**		10.0	
Barium	**400**	42.7		55.1		72.3		36.7		52.4		45.4		50.7		59.2	
Beryllium	72	0.457	J	0.680	J	0.406	J	0.465	J	0.626		0.601		0.327	J	0.625	
Cadmium	4.3	ND< 0.625	U	ND< 0.738	U	ND< 0.544	U	ND< 0.542	U	ND< 0.588	U	ND< 0.584	U	ND< 0.568	U	ND< 0.602	U
Calcium				405		ND< 272	U	158	J	12100		1770		1350		724	
Chromium, Hexavalent	110	ND< 1.1	U	ND< 1.4	U	ND< 1.1	U	ND< 1.1	U	ND< 1.2	U	ND< 1.1	U	ND< 1.1	U	ND< 1.2	U
Chromium, Total		22.2		17.5		19.4		19.8		14.0		14.6		19.5		15.5	
Cobalt				9.04		9.68		15.0		8.53		12.2		6.55		9.69	
Copper	270	38.9		31.1		26.1		41.4		30.3		31.3		45.3		24.5	
Cyanide	27			ND< 0.69	U	ND< 0.57	U	ND< 0.54	U	ND< 0.60	U	ND< 0.56	U	ND< 0.56	U	ND< 0.62	U
Cyanide	27	ND< 0.535	U														
Iron				26600		35900		41200		24200		32400		47600		24000	
Lead	**400**	17.6		92.0		20.3		21.0		62.0		39.7		41.2		38.5	
Magnesium				4120		5060		7130		8020		5050		6630		4620	
Manganese	**2000**	763	M	494	M	512		807		591		1060		390		725	
Mercury	**0.81**	0.0285		0.118		0.0516		0.0428		**2.32**		0.511		0.0699		0.0522	
Nickel	310	28.2		32.5		23.9		31.3		22.9		21.6		23.5		26.8	
Potassium				977		1020		1260		1040		688		1210		1010	
Selenium	180	ND< 2.50	U	ND< 1.48	U	ND< 1.09	U	ND< 1.08	U	1.33	B	1.04	JB	2.26		ND< 1.20	U
Silver	180	ND< 2.50	U	ND< 1.48	U	ND< 1.09	U	ND< 1.08	U	ND< 1.18	U	ND< 1.17	U	ND< 1.14	U	ND< 1.20	U
Sodium				ND< 369	U	ND< 272	U	ND< 271	U	ND< 294	U	ND< 292	U	ND< 284	U	ND< 301	U
Thallium				ND< 3.69	U	ND< 2.72	U	1.50	J	ND< 2.94	U	2.52	J	ND< 2.84	U	2.38	J
Vanadium				93.7		22.0		18.7		36.4		24.0		19.9		41.0	
Zinc	10000	82.4		78.1		84.0		102		58.1		81.0		88.1		77.0	

NOTES:

1. Soil sample analytical results are compared to the New York State Department of Environmental Conservation (NYSDEC) Title 6 of the official compilation of New York Codes, Rules, and Regulations (NYCRR) Part 375 Restricted Residential Soil Cleanup Objectives (RRSCOs).
2. RRSCO exceedances are in bold and highlighted yellow.
3. ND = Not Detected
4. Results shown as "ND" with Reporting Limits exceeding RRSCOs are in bold.
5. mg/kg = milligrams per kilogram.
6. Qualifier (Q) definitions are provided in the official lab reports.

TABLE 1C: Total Metals in Soil

AOC-1 - Power House and Former Coal Storage Area

Soil Sample Results (non-QA/QC)

Hudson River Psychiatric Center - North BCP Site, Poughkeepsie, NY

PVE Sheffler File #560909

	Date Sampled	5/7/2014		5/7/2014		5/6/2014		5/7/2014		5/7/2014		5/6/2014		5/6/2014		6/2/2014	
	Location	PH-SS-3		PH-SS-3		PH-SS-4		PH-SS-4		PH-SS-4		PH-SS-5		PH-SS-5		PH-SS-5	
	Sample ID	PH-SS-3 1-2'		PH-SS-3 2-3'		PH-SS-4 0-2"		PH-SS-4 1-2'		PH-SS-4 4-5'		PH-SS-5 0-2"		PH-SS-5 1-2'		PH-SS-5 1-2'	
Analyte	RRSCOs	Result	Q	Result	Q	Result	Q	Result	Q	Result	Q	Result	Q	Result	Q	Result	Q
Metals (mg/kg)																	
Aluminum		1660		11600		14100		18300		13000		10400		17300			
Antimony		ND< 6.82	U	ND< 6.97	U	ND< 6.60	U	ND< 6.48	U	ND< 6.20	U	ND< 8.25	U	ND< 7.73	U		
Arsenic	**16**	**182**		**92.7**		12.1		6.21		6.34		**20.7**		9.56			
Barium	**400**	59.8		38.3		58.2		26.9		28.2		103		104			
Beryllium	72	ND< 0.568	U	ND< 0.581	U	0.608		0.518	J	0.501	J	0.613	J	0.732			
Cadmium	4.3	ND< 0.568	U	ND< 0.581	U	ND< 0.550	U	ND< 0.540	U	ND< 0.517	U	0.952		ND< 0.645	U		
Calcium		431		ND< 290	U	910		412		793		5030		1860			
Chromium, Hexavalent	110	ND< 1.2	U	ND< 1.1	U	ND< 1.2	U	ND< 1.1	U	ND< 1.1	U	ND< 1.4	U			3.50	
Chromium, Total		4.93	B	16.8		15.6		21.2		17.0		20.7		20.0			
Cobalt		ND< 5.68	U	6.28		9.89		13.4		13.5		8.21		9.66			
Copper	270	19.7		29.2		29.4		41.9		32.6		33.5		21.3			
Cyanide	27	0.670		ND< 0.57	U	ND< 0.60	U	ND< 0.55	U	ND< 0.55	U	1.20				0.880	
Cyanide	27																
Iron		25400		45200		24100		39300		30100		22800		23900			
Lead	**400**	86.9		20.1		42.8		20.1		13.6		232		92.1			
Magnesium		291		4750		5070		8410		6750		4010		4780			
Manganese	**2000**	32.0		145		610		599		1450		887		1180			
Mercury	**0.81**	0.103		0.0363		0.457		0.0439		0.0208		0.111		0.0719			
Nickel	310	7.17		18.1		24.5		34.8		34.1		22.7		22.8			
Potassium		574		1030		841		867		862		1050		990			
Selenium	180	4.09	B	0.929	J	ND< 1.10	U	ND< 1.08	U	ND< 1.03	U	ND< 1.37	U	ND< 1.29	U		
Silver	180	ND< 1.14	U	ND< 1.16	U	ND< 1.10	U	ND< 1.08	U	ND< 1.03	U	ND< 1.37	U	ND< 1.29	U		
Sodium		ND< 284	U	ND< 290	U	ND< 275	U	ND< 270	U	ND< 259	U	ND< 344	U	ND< 322	U		
Thallium		ND< 2.84	U	ND< 2.90	U	ND< 2.75	U	ND< 2.70	U	1.81	J	ND< 3.44	U	ND< 3.22	U		
Vanadium		28.1		20.3		24.8		18.9		14.0		34.6		29.9			
Zinc	10000	13.9		68.6		79.9		113		88.4		111		87.9			

NOTES:

1. Soil sample analytical results are compared to the New York State Department of Environmental Conservation (NYSDEC) Title 6 of the official compilation of New York Codes, Rules, and Regulations (NYCRR) Part 375 Restricted Residential Soil Cleanup Objectives (RRSCOs).
2. RRSCO exceedances are in bold and highlighted yellow.
3. ND = Not Detected
4. Results shown as "ND" with Reporting Limits exceeding RRSCOs are in bold.
5. mg/kg = milligrams per kilogram.
6. Qualifier (Q) definitions are provided in the official lab reports.

TABLE 1C: Total Metals in Soil

AOC-1 - Power House and Former Coal Storage Area

Soil Sample Results (non-QA/QC)

Hudson River Psychiatric Center - North BCP Site, Poughkeepsie, NY

PVE Sheffler File #560909

	Date Sampled	5/6/2014		5/6/2014		7/17/2014		7/17/2014		11/25/2014		12/15/2014		11/25/2014		12/15/2014	
	Location	PH-SS-6		PH-SS-6		PH-SS-7		PH-SS-7		PH-SS-8		PH-SS-8		PH-SS-9		PH-SS-9	
	Sample ID	PH-SS-6 0-2"		PH-SS-6 1-2'		PH-SS-7 0-2"		PH-SS-7 1-2'		PH-SS-8 (0-2")		20141215		PH-SS-9 (0-2")		PH-SS-9 2-24"	
Analyte	RRSCOs	Result	Q	Result	Q	Result	Q	Result	Q	Result	Q	Result	Q	Result	Q	Result	Q
Metals (mg/kg)																	
Aluminum		13100		14100		16200		13100									
Antimony		ND< 7.17	U	ND< 7.73	U	4.69	J	3.75	J								
Arsenic	**16**	8.38		7.30		**22.8**		**24.0**	**D**	12.7		11.1		**62.0**		**22.8**	
Barium	**400**	76.2		86.7		48.3		34.4		62.8		47.7		142		**1070**	
Beryllium	72	0.539	J	0.649		0.565		0.510	J	0.639	J	0.496	J	1.01		1.20	
Cadmium	4.3	0.586	J	ND< 0.644	U	0.462	J	ND< 0.578	U	0.400	J	0.323	J	0.418	J	ND< 0.579	U
Calcium		29100		4190		2760		14600	DM								
Chromium, Hexavalent	110	ND< 1.3	U	ND< 1.2	U	ND< 1.1	U	ND< 1.1	U	ND< 1.4	U	ND< 1.2	U	ND< 1.2	U	ND< 1.2	U
Chromium, Total		22.7		16.9		20.0		17.9		16.2		14.6		11.3		11.5	
Cobalt		8.70		9.30		32.5		25.0									
Copper	270	26.6		24.2		77.1		73.0		34.4		35.6		62.1		24.4	
Cyanide	27	ND< 0.66	U	ND< 0.60	U	ND< 0.50	U	ND< 0.50	U								
Cyanide	27									ND< 0.624	U	ND< 0.453	U	ND< 0.595	U	ND< 0.523	U
Iron		21500		19700		45700		37700									
Lead	**400**	276		161		25.6		20.2		93.6		67.9		78.1		18.7	
Magnesium		19200		4690		9260		13600	D								
Manganese	**2000**	837		910		**2150**		1110	M	542		485		111		45.6	
Mercury	**0.81**	0.115		0.0954		0.0751		0.0889		0.104		0.115		0.194		0.349	
Nickel	310	25.3		20.7		53.9		46.7		30.0		23.1		129		20.7	
Potassium		1070		870		1230		1200									
Selenium	180	ND< 1.20	U	ND< 1.29	U	9.44		8.63		ND< 1.31	U	ND< 1.22	U	0.599	J	ND< 1.16	U
Silver	180	ND< 1.20	U	ND< 1.29	U	ND< 1.11	U	ND< 1.16	U	ND< 1.31	U	ND< 1.22	U	ND< 1.19	U	ND< 1.16	U
Sodium		ND< 299	U	ND< 322	U	ND< 276	U	ND< 289	U								
Thallium		ND< 2.99	U	ND< 3.22	U	2.99		ND< 2.89	U								
Vanadium		30.0		19.7		26.4		22.6									
Zinc	10000	140		142		235		202		102		73.9		109		20.2	

NOTES:

1. Soil sample analytical results are compared to the New York State Department of Environmental Conservation (NYSDEC) Title 6 of the official compilation of New York Codes, Rules, and Regulations (NYCRR) Part 375 Restricted Residential Soil Cleanup Objectives (RRSCOs).
2. RRSCO exceedances are in bold and highlighted yellow.
3. ND = Not Detected
4. Results shown as "ND" with Reporting Limits exceeding RRSCOs are in bold.
5. mg/kg = milligrams per kilogram.
6. Qualifier (Q) definitions are provided in the official lab reports.

TABLE 1C: Total Metals in Soil

AOC-1 - Power House and Former Coal Storage Area

Soil Sample Results (non-QA/QC)

Hudson River Psychiatric Center - North BCP Site, Poughkeepsie, NY

PVE Sheffler File #560909

	Date Sampled	11/25/2014		12/15/2014	
	Location	PH-SS-10		PH-SS-10	
	Sample ID	PH-SS-10 (0-2")		PH-SS-10 2-24"	
Analyte	RRSCOs	Result	Q	Result	Q
Metals (mg/kg)					
Aluminum					
Antimony					
Arsenic	**16**	**26.8**		**28.7**	
Barium	**400**	27.1		33.9	
Beryllium	72	0.461	J	0.541	J
Cadmium	4.3	ND< 0.557	U	ND< 0.630	U
Calcium					
Chromium, Hexavalent	110	ND< 1.2	U	ND< 1.2	U
Chromium, Total		10.3		8.91	
Cobalt					
Copper	270	49.0		27.9	
Cyanide	27				
Cyanide	27	ND< 0.563	U	ND< 0.338	U
Iron					
Lead	**400**	36.7		52.0	
Magnesium					
Manganese	**2000**	87.8		240	
Mercury	**0.81**	0.192		0.184	
Nickel	310	7.63		12.7	
Potassium					
Selenium	180	4.51		0.886	J
Silver	180	ND< 1.11	U	ND< 1.26	U
Sodium					
Thallium					
Vanadium					
Zinc	10000	7.79		32.5	

NOTES:

1. Soil sample analytical results are compared to the New York State Department of Environmental Conservation (NYSDEC) Title 6 of the official compilation of New York Codes, Rules, and Regulations (NYCRR) Part 375 Restricted Residential Soil Cleanup Objectives (RRSCOs).
2. RRSCO exceedances are in bold and highlighted yellow.
3. ND = Not Detected
4. Results shown as "ND" with Reporting Limits exceeding RRSCOs are in bold.
5. mg/kg = milligrams per kilogram.
6. Qualifier (Q) definitions are provided in the official lab reports.

TABLE 1D: Pesticides, Herbicides, and PCBs in Soil
AOC-1 - Power House and Former Coal Storage Area
Soil Sample Results (non-QA/QC)
Hudson River Psychiatric Center - North BCP Site, Poughkeepsie, NY
PVE Sheffler File #560909

	Date Sampled	5/7/2014		5/7/2014		5/7/2014		5/7/2014		5/8/2014		5/8/2014		7/15/2014		7/15/2014	
	Location	PH-1		PH-1		PH-1		PH-4		PH-4		PH-4		PH-10		PH-10	
	Sample ID	PH-1 0-2"		PH-1 1-2'		PH-1 2-3.25'		PH-4 0-2"		PH-4 1-2'		PH-4 11-12'		PH-10 0-2"		PH-10 1-2'	
Analyte	RRSCOs	Result	Q	Result	Q	Result	Q	Result	Q	Result	Q	Result	Q	Result	Q	Result	Q
Pesticides (µg/kg)																	
Aldrin	97	ND< 3.08	U	ND< 2.97	U	ND< 3.01	U	ND< 3.21	U	ND< 3.21	U	ND< 2.94	U	ND< 3.35	U	ND< 3.39	U
Alpha Bhc (Alpha Hexachlorocyclohexane)	480	ND< 3.08	U	ND< 2.97	U	ND< 3.01	U	ND< 3.21	U	ND< 3.21	U	ND< 2.94	U	ND< 3.35	U	ND< 3.39	U
Alpha Chlordane	4200	ND< 3.08	U	ND< 2.97	U	ND< 3.01	U	ND< 3.21	U	ND< 3.21	U	1.76	JP	ND< 3.35	U	ND< 3.39	U
Alpha Endosulfan	24000	ND< 3.08	U	ND< 2.97	U	ND< 3.01	U	ND< 3.21	U	ND< 3.21	U	2.54	J	ND< 3.35	U	ND< 3.39	U
Beta Bhc (Beta Hexachlorocyclohexane)	360	ND< 3.08	U	ND< 2.97	U	ND< 3.01	U	ND< 3.21	U	ND< 3.21	U	8.99	P	ND< 3.35	U	ND< 3.39	U
Beta Endosulfan	24000	ND< 3.08	U	ND< 2.97	U	ND< 3.01	U	ND< 3.21	U	ND< 3.21	U	17.7		ND< 3.35	U	ND< 3.39	U
Chlordane																	
Delta BHC (Delta Hexachlorocyclohexane)	100000	ND< 3.08	U	ND< 2.97	U	ND< 3.01	U	ND< 3.21	U	ND< 3.21	U	3.12	P	ND< 3.35	U	ND< 3.39	U
Dieldrin	200	ND< 3.08	U	ND< 2.97	U	ND< 3.01	U	ND< 3.21	U	ND< 3.21	U	2.30	JP	ND< 3.35	U	ND< 3.39	U
Endosulfan Sulfate	24000	1.77	JP	ND< 2.97	U	ND< 3.01	U	ND< 3.21	U	4.07	P	6.85	P	3.28	J	ND< 3.39	U
Endrin	11000	ND< 3.08	U	ND< 2.97	U	ND< 3.01	U	1.64	JP	4.65	P	14.4		1.93	JP	ND< 3.39	U
Endrin Aldehyde		1.68	JP	ND< 2.97	U	ND< 3.01	U	ND< 3.21	U	ND< 3.21	U	ND< 2.94	U	6.02		ND< 3.39	U
Endrin Ketone		ND< 3.08	U	ND< 2.97	U	ND< 3.01	U	ND< 3.21	U	ND< 3.21	U	2.69	JP	3.59	P	1.71	J
Gamma Bhc (Lindane)	1300	ND< 3.08	U	ND< 2.97	U	ND< 3.01	U	ND< 3.21	U	ND< 3.21	U	4.33		ND< 3.35	U	ND< 3.39	U
Gamma Chlordane		ND< 3.08	U	ND< 2.97	U	ND< 3.01	U	1.93	JP	1.97	JP	9.12	P	ND< 3.35	U	ND< 3.39	U
Heptachlor	2100	ND< 3.08	U	ND< 2.97	U	ND< 3.01	U	ND< 3.21	U	ND< 3.21	U	ND< 2.94	U	ND< 3.35	U	ND< 3.39	U
Heptachlor Epoxide		ND< 3.08	U	ND< 2.97	U	ND< 3.01	U	ND< 3.21	U	ND< 3.21	U	3.87	P	ND< 3.35	U	ND< 3.39	U
Methoxychlor		3.14	P	ND< 2.97	U	ND< 3.01	U	8.97	P	ND< 3.21	U	20.3	P	2.28	JP	3.40	P
P,P'-DDD	13000	4.67		ND< 2.97	U	ND< 3.01	U	2.88	J	ND< 3.21	U	18.4		3.30	JP	ND< 3.39	U
P,P'-DDE	8900	2.70	J	ND< 2.97	U	ND< 3.01	U	3.98		4.81		11.6	P	1.79	J	ND< 3.39	U
P,P'-DDT	7900	13.5		ND< 2.97	U	ND< 3.01	U	5.75		5.41		6.79	P	6.65		1.72	J
Toxaphene		ND< 30.8	U	ND< 29.7	U	ND< 30.1	U	ND< 32.1	U	ND< 32.1	U	ND< 29.4	U	ND< 33.5	U	ND< 33.9	U
Herbicides (µg/kg)																	
Silvex (2,4,5-TP)	100000	ND< 13	U	ND< 13	U	ND< 12	U	ND< 14	U	ND< 14	U	ND< 14	U	ND< 14	U	ND< 14	U
PCBs (mg/kg)																	
PCB-1016 (Aroclor 1016)		ND< 0.0308	U	ND< 0.0297	U	ND< 0.0301	U	ND< 0.0321	U	ND< 0.0321	U	ND< 0.0294	U	ND< 0.0337	U	ND< 0.0338	U
PCB-1221 (Aroclor 1221)		ND< 0.0308	U	ND< 0.0297	U	ND< 0.0301	U	ND< 0.0321	U	ND< 0.0321	U	ND< 0.0294	U	ND< 0.0337	U	ND< 0.0338	U
PCB-1232 (Aroclor 1232)		ND< 0.0308	U	ND< 0.0297	U	ND< 0.0301	U	ND< 0.0321	U	ND< 0.0321	U	ND< 0.0294	U	ND< 0.0337	U	ND< 0.0338	U
PCB-1242 (Aroclor 1242)		ND< 0.0308	U	ND< 0.0297	U	ND< 0.0301	U	ND< 0.0321	U	ND< 0.0321	U	ND< 0.0294	U	ND< 0.0337	U	ND< 0.0338	U
PCB-1248 (Aroclor 1248)		ND< 0.0308	U	ND< 0.0297	U	ND< 0.0301	U	ND< 0.0321	U	ND< 0.0321	U	ND< 0.0294	U	ND< 0.0337	U	ND< 0.0338	U
PCB-1254 (Aroclor 1254)		ND< 0.0308	U	ND< 0.0297	U	ND< 0.0301	U	ND< 0.0321	U	ND< 0.0321	U	ND< 0.0294	U	ND< 0.0337	U	ND< 0.0338	U
PCB-1260 (Aroclor 1260)		0.0194	J	ND< 0.0297	U	ND< 0.0301	U	ND< 0.0321	U	ND< 0.0321	U	ND< 0.0294	U	ND< 0.0337	U	ND< 0.0338	U
PCB-1262 (Aroclor 1262)		ND< 0.0308	U	ND< 0.0297	U	ND< 0.0301	U	ND< 0.0321	U	ND< 0.0321	U	ND< 0.0294	U	ND< 0.0337	U	ND< 0.0338	U
PCB-1268 (Aroclor 1268)		ND< 0.0308	U	ND< 0.0297	U	ND< 0.0301	U	ND< 0.0321	U	ND< 0.0321	U	ND< 0.0294	U	ND< 0.0337	U	ND< 0.0338	U

NOTES:

1. Soil sample analytical results are compared to the New York State Department of Environmental Conservation (NYSDEC) Title 6 of the official compilation of New York Codes, Rules, and Regulations (NYCRR) Part 375 Restricted Residential Soil Cleanup Objectives (RRSCOs).
2. RRSCO exceedances are in bold and highlighted yellow.
3. ND = Not Detected
4. Results shown as "ND" with Reporting Limits exceeding RRSCOs are in bold.
5. PCBs = Polychlorinated Biphenyls
6. µg/kg = micrograms per kilogram.
7. mg/kg = milligrams per kilogram.
8. Qualifier (Q) definitions are provided in the official lab reports.

TABLE 1D: Pesticides, Herbicides, and PCBs in Soil
AOC-1 - Power House and Former Coal Storage Area
Soil Sample Results (non-QA/QC)
Hudson River Psychiatric Center - North BCP Site, Poughkeepsie, NY
PVE Sheffler File #560909

	Date Sampled	7/15/2014		5/7/2014		5/12/2014		12/18/2014		12/18/2014		5/7/2014		5/7/2014		5/7/2014	
	Location	PH-10		PH-12		PH-12		PH-23		PH-23		PH-SS-1		PH-SS-1		PH-SS-1	
	Sample ID	PH-10 12.5-14'		PH-12 0-2"		PH-12 1-2'		PH-23 2-5'		PH-23 8-10'		PH-SS-1 0-2"		PH-SS-1 1-2'		PH-SS-1 2-3'	
Analyte	RRSCOs	Result	Q	Result	Q	Result	Q	Result	Q	Result	Q	Result	Q	Result	Q	Result	Q
Pesticides (µg/kg)																	
Aldrin	97	ND< 3.05	U	ND< 2.93	U	ND< 3.90	U	ND< 3.35	U	ND< 3.13	U	ND< 3.98	U	ND< 3.21	U	ND< 3.25	U
Alpha Bhc (Alpha Hexachlorocyclohexane)	480	ND< 3.05	U	ND< 2.93	U	ND< 3.90	U	ND< 3.35	U	ND< 3.13	U	ND< 3.98	U	ND< 3.21	U	ND< 3.25	U
Alpha Chlordane	4200	ND< 3.05	U	ND< 2.93	U	ND< 3.90	U	ND< 3.35	U	ND< 3.13	U	ND< 3.98	U	ND< 3.21	U	ND< 3.25	U
Alpha Endosulfan	24000	ND< 3.05	U	ND< 2.93	U	ND< 3.90	U	ND< 3.35	U	ND< 3.13	U	ND< 3.98	U	ND< 3.21	U	ND< 3.25	U
Beta Bhc (Beta Hexachlorocyclohexane)	360	ND< 3.05	U	ND< 2.93	U	ND< 3.90	U	ND< 3.35	U	ND< 3.13	U	ND< 3.98	U	ND< 3.21	U	ND< 3.25	U
Beta Endosulfan	24000	ND< 3.05	U	ND< 2.93	U	ND< 3.90	U	ND< 3.35	U	ND< 3.13	U	ND< 3.98	U	ND< 3.21	U	ND< 3.25	U
Chlordane																	
Delta BHC (Delta Hexachlorocyclohexane)	100000	ND< 3.05	U	ND< 2.93	U	ND< 3.90	U	ND< 3.35	U	ND< 3.13	U	ND< 3.98	U	ND< 3.21	U	ND< 3.25	U
Dieldrin	200	ND< 3.05	U	ND< 2.93	U	ND< 3.90	U	ND< 3.35	U	ND< 3.13	U	ND< 3.98	U	ND< 3.21	U	ND< 3.25	U
Endosulfan Sulfate	24000	ND< 3.05	U	ND< 2.93	U	ND< 3.90	U	ND< 3.35	U	ND< 3.13	U	3.12	J	ND< 3.21	U	ND< 3.25	U
Endrin	11000	ND< 3.05	U	ND< 2.93	U	ND< 3.90	U	ND< 3.35	U	ND< 3.13	U	3.19	JP	ND< 3.21	U	ND< 3.25	U
Endrin Aldehyde		ND< 3.05	U	ND< 2.93	U	ND< 3.90	U	ND< 3.35	U	ND< 3.13	U	ND< 3.98	U	ND< 3.21	U	ND< 3.25	U
Endrin Ketone		ND< 3.05	U	ND< 2.93	U	ND< 3.90	U	ND< 3.35	U	ND< 3.13	U	2.95	JP	ND< 3.21	U	ND< 3.25	U
Gamma Bhc (Lindane)	1300	ND< 3.05	U	ND< 2.93	U	ND< 3.90	U	ND< 3.35	U	ND< 3.13	U	ND< 3.98	U	ND< 3.21	U	ND< 3.25	U
Gamma Chlordane		ND< 3.05	U	ND< 2.93	U	ND< 3.90	U	ND< 3.35	U	ND< 3.13	U	ND< 3.98	U	ND< 3.21	U	ND< 3.25	U
Heptachlor	2100	ND< 3.05	U	ND< 2.93	U	ND< 3.90	U	ND< 3.35	U	ND< 3.13	U	ND< 3.98	U	ND< 3.21	U	ND< 3.25	U
Heptachlor Epoxide		ND< 3.05	U	ND< 2.93	U	ND< 3.90	U	ND< 3.35	U	ND< 3.13	U	ND< 3.98	U	ND< 3.21	U	ND< 3.25	U
Methoxychlor		ND< 3.05	U	ND< 2.93	U	ND< 3.90	U	ND< 3.35	U	ND< 3.13	U	ND< 3.98	U	ND< 3.21	U	ND< 3.25	U
P,P'-DDD	13000	ND< 3.05	U	ND< 2.93	U	ND< 3.90	U	ND< 3.35	U	ND< 3.13	U	ND< 3.98	U	ND< 3.21	U	ND< 3.25	U
P,P'-DDE	8900	ND< 3.05	U	ND< 2.93	U	ND< 3.90	U	ND< 3.35	U	ND< 3.13	U	7.56	P	ND< 3.21	U	ND< 3.25	U
P,P'-DDT	7900	ND< 3.05	U	ND< 2.93	U	ND< 3.90	U	ND< 3.35	U	ND< 3.13	U	8.96	M	ND< 3.21	U	ND< 3.25	U
Toxaphene		ND< 30.5	U	ND< 29.3	U	ND< 39.0	U	ND< 33.5	U	ND< 31.3	U	ND< 39.8	U	ND< 32.1	U	ND< 32.5	U
Herbicides (µg/kg)																	
Silvex (2,4,5-TP)	100000	ND< 13	U	ND< 12	U	ND< 14	U	ND< 15	U	ND< 15	U	ND< 16	U	ND< 14	U	ND< 13	U
PCBs (mg/kg)																	
PCB-1016 (Aroclor 1016)		ND< 0.0304	U	ND< 0.0293	U	ND< 0.0390	U	ND< 0.0335	U	ND< 0.0313	U	ND< 0.0398	U	ND< 0.0321	U	ND< 0.0325	U
PCB-1221 (Aroclor 1221)		ND< 0.0304	U	ND< 0.0293	U	ND< 0.0390	U	ND< 0.0335	U	ND< 0.0313	U	ND< 0.0398	U	ND< 0.0321	U	ND< 0.0325	U
PCB-1232 (Aroclor 1232)		ND< 0.0304	U	ND< 0.0293	U	ND< 0.0390	U	ND< 0.0335	U	ND< 0.0313	U	ND< 0.0398	U	ND< 0.0321	U	ND< 0.0325	U
PCB-1242 (Aroclor 1242)		ND< 0.0304	U	ND< 0.0293	U	ND< 0.0390	U	ND< 0.0335	U	ND< 0.0313	U	ND< 0.0398	U	ND< 0.0321	U	ND< 0.0325	U
PCB-1248 (Aroclor 1248)		ND< 0.0304	U	ND< 0.0293	U	ND< 0.0390	U	ND< 0.0335	U	ND< 0.0313	U	ND< 0.0398	U	ND< 0.0321	U	ND< 0.0325	U
PCB-1254 (Aroclor 1254)		ND< 0.0304	U	ND< 0.0293	U	ND< 0.0390	U	ND< 0.0335	U	ND< 0.0313	U	ND< 0.0398	U	ND< 0.0321	U	ND< 0.0325	U
PCB-1260 (Aroclor 1260)		ND< 0.0304	U	ND< 0.0293	U	ND< 0.0390	U	ND< 0.0335	U	ND< 0.0313	U	0.0243	J	ND< 0.0321	U	ND< 0.0325	U
PCB-1262 (Aroclor 1262)		ND< 0.0304	U	ND< 0.0293	U	ND< 0.0390	U	ND< 0.0335	U	ND< 0.0313	U	ND< 0.0398	U	ND< 0.0321	U	ND< 0.0325	U
PCB-1268 (Aroclor 1268)		ND< 0.0304	U	ND< 0.0293	U	ND< 0.0390	U	ND< 0.0335	U	ND< 0.0313	U	ND< 0.0398	U	ND< 0.0321	U	ND< 0.0325	U

NOTES:

1. Soil sample analytical results are compared to the New York State Department of Environmental Conservation (NYSDEC) Title 6 of the official compilation of New York Codes, Rules, and Regulations (NYCRR) Part 375 Restricted Residential Soil Cleanup Objectives (RRSCOs).
2. RRSCO exceedances are in bold and highlighted yellow.
3. ND = Not Detected
4. Results shown as "ND" with Reporting Limits exceeding RRSCOs are in bold.
5. PCBs = Polychlorinated Biphenyls
6. µg/kg = micrograms per kilogram.
7. mg/kg = milligrams per kilogram.
8. Qualifier (Q) definitions are provided in the official lab reports.

TABLE 1D: Pesticides, Herbicides, and PCBs in Soil
AOC-1 - Power House and Former Coal Storage Area
Soil Sample Results (non-QA/QC)
Hudson River Psychiatric Center - North BCP Site, Poughkeepsie, NY
PVE Sheffler File #560909

	Date Sampled	5/6/2014		5/7/2014		5/7/2014		5/6/2014		5/6/2014		5/6/2014		7/17/2014		7/17/2014	
	Location	PH-SS-4		PH-SS-4		PH-SS-4		PH-SS-5		PH-SS-6		PH-SS-6		PH-SS-7		PH-SS-7	
	Sample ID	PH-SS-4 0-2"		PH-SS-4 1-2'		PH-SS-4 4-5'		PH-SS-5 1-2'		PH-SS-6 0-2"		PH-SS-6 1-2'		PH-SS-7 0-2"		PH-SS-7 1-2'	
Analyte	RRSCOs	Result	Q	Result	Q	Result	Q	Result	Q	Result	Q	Result	Q	Result	Q	Result	Q
Pesticides (µg/kg)																	
Aldrin	97	ND< 2.0	U	ND< 3.07	U	ND< 3.03	U			ND< 2.2	U	ND< 2.0	U	ND< 3.06	U	ND< 3.03	U
Alpha Bhc (Alpha Hexachlorocyclohexane)	480	ND< 2.0	U	ND< 3.07	U	ND< 3.03	U			ND< 2.2	U	ND< 2.0	U	ND< 3.06	U	ND< 3.03	U
Alpha Chlordane	4200	ND< 2.0	U	ND< 3.07	U	ND< 3.03	U			ND< 2.2	U	ND< 2.0	U	1.81	JP	ND< 3.03	U
Alpha Endosulfan	24000	ND< 2.0	U	ND< 3.07	U	ND< 3.03	U			ND< 2.2	U	ND< 2.0	U	ND< 3.06	U	ND< 3.03	U
Beta Bhc (Beta Hexachlorocyclohexane)	360	ND< 2.0	U	ND< 3.07	U	ND< 3.03	U			ND< 2.2	U	ND< 2.0	U	ND< 3.06	U	ND< 3.03	U
Beta Endosulfan	24000	ND< 4.0	U	ND< 3.07	U	ND< 3.03	U			ND< 4.3	U	ND< 4.0	U	ND< 3.06	U	ND< 3.03	U
Chlordane		ND< 2.00	U							ND< 220	U	ND< 200	U				
Delta BHC (Delta Hexachlorocyclohexane)	100000	ND< 2.0	U	ND< 3.07	U	ND< 3.03	U			ND< 2.2	U	ND< 2.0	U	1.93	JP	ND< 3.03	U
Dieldrin	200	ND< 4.0	U	ND< 3.07	U	ND< 3.03	U			ND< 4.3	U	ND< 4.0	U	1.95	JP	ND< 3.03	U
Endosulfan Sulfate	24000	ND< 4.0	U	ND< 3.07	U	ND< 3.03	U			ND< 4.3	U	ND< 4.0	U	ND< 3.06	U	2.46	JP
Endrin	11000	ND< 4.0	U	ND< 3.07	U	ND< 3.03	U			ND< 4.3	U	ND< 4.0	U	ND< 3.06	U	3.00	JP
Endrin Aldehyde		ND< 4.0	U	ND< 3.07	U	ND< 3.03	U			ND< 4.3	U	ND< 4.0	U	4.67	P	3.38	
Endrin Ketone		ND< 4.0	U	ND< 3.07	U	ND< 3.03	U			ND< 4.3	U	ND< 4.0	U	9.05	P	2.04	JP
Gamma Bhc (Lindane)	1300	ND< 2.0	U	ND< 3.07	U	ND< 3.03	U			ND< 2.2	U	ND< 2.0	U	ND< 3.06	U	ND< 3.03	U
Gamma Chlordane		ND< 2.0	U	ND< 3.07	U	ND< 3.03	U			ND< 2.2	U	ND< 2.0	U	ND< 3.06	U	ND< 3.03	U
Heptachlor	2100	ND< 2.0	U	ND< 3.07	U	ND< 3.03	U			ND< 2.2	U	ND< 2.0	U	ND< 3.06	U	ND< 3.03	U
Heptachlor Epoxide		ND< 2.0	U	ND< 3.07	U	ND< 3.03	U			ND< 2.2	U	ND< 2.0	U	ND< 3.06	U	ND< 3.03	U
Methoxychlor		ND< 20	U	ND< 3.07	U	ND< 3.03	U			ND< 22	U	ND< 20	U	10.6	P	5.23	P
P,P'-DDD	13000	ND< 4.0	U	ND< 3.07	U	ND< 3.03	U			ND< 4.3	U	ND< 4.0	U	2.12	JP	1.87	JP
P,P'-DDE	8900	ND< 4.0	U	ND< 3.07	U	ND< 3.03	U			ND< 4.3	U	ND< 4.0	U	ND< 3.06	U	ND< 3.03	U
P,P'-DDT	7900	ND< 4.0	U	ND< 3.07	U	ND< 3.03	U			4.90		ND< 4.0	U	2.61	JP	1.85	JP
Toxaphene		ND< 200	U	ND< 30.7	U	ND< 30.3	U			ND< 220	U	ND< 200	U	ND< 30.6	U	ND< 30.3	U
Herbicides (µg/kg)																	
Silvex (2,4,5-TP)	100000	ND< 240	U	ND< 13	U	ND< 13	U			ND< 16	U	ND< 14	U	ND< 13	U	ND< 13	U
PCBs (mg/kg)																	
PCB-1016 (Aroclor 1016)		ND< 0.0344	U	ND< 0.0307	U	ND< 0.0303	U	ND< 0.0347	U	ND< 0.0359	U	ND< 0.0341	U	ND< 0.0305	U	ND< 0.0304	U
PCB-1221 (Aroclor 1221)		ND< 0.0344	U	ND< 0.0307	U	ND< 0.0303	U	ND< 0.0347	U	ND< 0.0359	U	ND< 0.0341	U	ND< 0.0305	U	ND< 0.0304	U
PCB-1232 (Aroclor 1232)		ND< 0.0344	U	ND< 0.0307	U	ND< 0.0303	U	ND< 0.0347	U	ND< 0.0359	U	ND< 0.0341	U	ND< 0.0305	U	ND< 0.0304	U
PCB-1242 (Aroclor 1242)		ND< 0.0344	U	ND< 0.0307	U	ND< 0.0303	U	ND< 0.0347	U	ND< 0.0359	U	ND< 0.0341	U	ND< 0.0305	U	ND< 0.0304	U
PCB-1248 (Aroclor 1248)		ND< 0.0344	U	ND< 0.0307	U	ND< 0.0303	U	ND< 0.0347	U	ND< 0.0359	U	ND< 0.0341	U	ND< 0.0305	U	ND< 0.0304	U
PCB-1254 (Aroclor 1254)		ND< 0.0344	U	ND< 0.0307	U	ND< 0.0303	U	ND< 0.0347	U	ND< 0.0359	U	ND< 0.0341	U	ND< 0.0305	U	ND< 0.0304	U
PCB-1260 (Aroclor 1260)		ND< 0.0344	U	ND< 0.0307	U	ND< 0.0303	U	0.0238	J	0.0374		ND< 0.0341	U	ND< 0.0305	U	ND< 0.0304	U
PCB-1262 (Aroclor 1262)		ND< 0.0344	U	ND< 0.0307	U	ND< 0.0303	U	ND< 0.0347	U	ND< 0.0359	U	ND< 0.0341	U	ND< 0.0305	U	ND< 0.0304	U
PCB-1268 (Aroclor 1268)		ND< 0.0344	U	ND< 0.0307	U	ND< 0.0303	U	ND< 0.0347	U	ND< 0.0359	U	ND< 0.0341	U	ND< 0.0305	U	ND< 0.0304	U

NOTES:

1. Soil sample analytical results are compared to the New York State Department of Environmental Conservation (NYSDEC) Title 6 of the official compilation of New York Codes, Rules, and Regulations (NYCRR) Part 375 Restricted Residential Soil Cleanup Objectives (RRSCOs).
2. RRSCO exceedances are in bold and highlighted yellow.
3. ND = Not Detected
4. Results shown as "ND" with Reporting Limits exceeding RRSCOs are in bold.
5. PCBs = Polychlorinated Biphenyls
6. µg/kg = micrograms per kilogram.
7. mg/kg = milligrams per kilogram.
8. Qualifier (Q) definitions are provided in the official lab reports.

TABLE 1D: Pesticides, Herbicides, and PCBs in Soil
AOC-1 - Power House and Former Coal Storage Area
Soil Sample Results (non-QA/QC)
Hudson River Psychiatric Center - North BCP Site, Poughkeepsie, NY
PVE Sheffler File #560909

	Date Sampled	11/25/2014		12/15/2014		11/25/2014		12/15/2014		11/25/2014		12/15/2014	
	Location	PH-SS-8		PH-SS-8		PH-SS-9		PH-SS-9		PH-SS-10		PH-SS-10	
	Sample ID	PH-SS-8 (0-2")		20141215		PH-SS-9 (0-2")		PH-SS-9 2-24"		PH-SS-10 (0-2")		PH-SS-10 2-24"	
Analyte	RRSCOs	Result	Q	Result	Q	Result	Q	Result	Q	Result	Q	Result	Q
Pesticides (µg/kg)													
Aldrin	97	ND< 3.74	U	ND< 3.37	U	1.79	J	1.81	JP	6.93	P	4.05	
Alpha Bhc (Alpha Hexachlorocyclohexane)	480	2.31	J	1.84	JP	ND< 3.41	U	2.02	J	ND< 3.15	U	2.34	J
Alpha Chlordane	4200	10.1		22.0		ND< 3.41	U	ND< 3.32	U	2.00	JP	3.02	JP
Alpha Endosulfan	24000	ND< 3.74	U	ND< 3.37	U	ND< 3.41	U	ND< 3.32	U	3.89		ND< 3.34	U
Beta Bhc (Beta Hexachlorocyclohexane)	360	2.62	JP	ND< 3.37	U	ND< 3.41	U	3.34	P	3.08	JP	2.86	JP
Beta Endosulfan	24000	3.35	JP	ND< 3.37	U	ND< 3.41	U	ND< 3.32	U	ND< 3.15	U	2.57	JP
Chlordane													
Delta BHC (Delta Hexachlorocyclohexane)	100000	ND< 3.74	U	ND< 3.37	U	2.12	JP	ND< 3.32	U	4.37		2.13	JP
Dieldrin	200	ND< 3.74	U	ND< 3.37	U	ND< 3.41	U	2.25	JP	ND< 3.15	U	6.09	P
Endosulfan Sulfate	24000	5.28	P	ND< 3.37	U	3.97	P	ND< 3.32	U	6.84	P	ND< 3.34	U
Endrin	11000	4.17	P	6.84	P	7.52	P	5.61	P	3.25	P	3.50	P
Endrin Aldehyde		3.02	JP	3.52		6.47	P	5.80		26.4		10.3	
Endrin Ketone		2.87	JP	8.72		3.59		3.40		11.2	P	12.4	
Gamma Bhc (Lindane)	1300	ND< 3.74	U	ND< 3.37	U	ND< 3.41	U	ND< 3.32	U	2.54	JP	ND< 3.34	U
Gamma Chlordane		1.90	JP	ND< 3.37	U	3.72	P	ND< 3.32	U	17.9	P	ND< 3.34	U
Heptachlor	2100	ND< 3.74	U	ND< 3.37	U	ND< 3.41	U	ND< 3.32	U	ND< 3.15	U	2.37	J
Heptachlor Epoxide		ND< 3.74	U	ND< 3.37	U	ND< 3.41	U	ND< 3.32	U	3.15	JP	ND< 3.34	U
Methoxychlor		ND< 3.74	U	6.86	P	5.78	P	4.04	P	20.8	P	6.52	P
P,P'-DDD	13000	ND< 3.74	U	2.33	JP	4.19	P	ND< 3.32	U	9.14	P	ND< 3.34	U
P,P'-DDE	8900	3.23	JP	2.07	JP	1.83	JP	1.75	J	3.59	P	24.8	
P,P'-DDT	7900	7.70		2.92	JP	6.82		3.71		16.2		35.2	
Toxaphene		ND< 37.4	U	ND< 33.7	U	ND< 34.1	U	ND< 33.2	U	ND< 31.5	U	ND< 33.4	U
Herbicides (µg/kg)													
Silvex (2,4,5-TP)	100000	ND< 17	U	ND< 14	U	ND< 15	U	ND< 15	U	ND< 16	U	ND< 14	U
PCBs (mg/kg)													
PCB-1016 (Aroclor 1016)		ND< 0.0374	U	ND< 0.0337	U	ND< 0.0341	U	ND< 0.0332	U	ND< 0.0315	U	ND< 0.0334	U
PCB-1221 (Aroclor 1221)		ND< 0.0374	U	ND< 0.0337	U	ND< 0.0341	U	ND< 0.0332	U	ND< 0.0315	U	ND< 0.0334	U
PCB-1232 (Aroclor 1232)		ND< 0.0374	U	ND< 0.0337	U	ND< 0.0341	U	ND< 0.0332	U	ND< 0.0315	U	ND< 0.0334	U
PCB-1242 (Aroclor 1242)		ND< 0.0374	U	ND< 0.0337	U	ND< 0.0341	U	ND< 0.0332	U	ND< 0.0315	U	ND< 0.0334	U
PCB-1248 (Aroclor 1248)		ND< 0.0374	U	ND< 0.0337	U	ND< 0.0341	U	ND< 0.0332	U	ND< 0.0315	U	ND< 0.0334	U
PCB-1254 (Aroclor 1254)		ND< 0.0374	U	ND< 0.0337	U	ND< 0.0341	U	ND< 0.0332	U	ND< 0.0315	U	ND< 0.0334	U
PCB-1260 (Aroclor 1260)		0.0438		ND< 0.0337	U	ND< 0.0341	U	ND< 0.0332	U	0.0402		0.0684	
PCB-1262 (Aroclor 1262)		ND< 0.0374	U	ND< 0.0337	U	ND< 0.0341	U	ND< 0.0332	U	ND< 0.0315	U	ND< 0.0334	U
PCB-1268 (Aroclor 1268)		ND< 0.0374	U	ND< 0.0337	U	ND< 0.0341	U	ND< 0.0332	U	ND< 0.0315	U	ND< 0.0334	U

NOTES:

1. Soil sample analytical results are compared to the New York State Department of Environmental Conservation (NYSDEC) Title 6 of the official compilation of New York Codes, Rules, and Regulations (NYCRR) Part 375 Restricted Residential Soil Cleanup Objectives (RRSCOs).
2. RRSCO exceedances are in bold and highlighted yellow.
3. ND = Not Detected
4. Results shown as "ND" with Reporting Limits exceeding RRSCOs are in bold.
5. PCBs = Polychlorinated Biphenyls
6. µg/kg = micrograms per kilogram.
7. mg/kg = milligrams per kilogram.
8. Qualifier (Q) definitions are provided in the official lab reports.

Table 1D – Pesticides, Herbicides, and PCBs in Soil – AOC-1

TABLE 1D: Pesticides, Herbicides, and PCBs in Soil
AOC-1 - Power House and Former Coal Storage Area
Soil Sample Results (non-QA/QC)
Hudson River Psychiatric Center - North BCP Site, Poughkeepsie, NY
PVE Sheffler File #560909

	Date Sampled	5/7/2014		5/7/2014		5/7/2014		5/7/2014		5/8/2014		5/8/2014		7/15/2014		7/15/2014	
	Location	PH-1		PH-1		PH-1		PH-4		PH-4		PH-4		PH-10		PH-10	
	Sample ID	PH-1 0-2"		PH-1 1-2'		PH-1 2-3.25'		PH-4 0-2"		PH-4 1-2'		PH-4 11-12'		PH-10 0-2"		PH-10 1-2'	
Analyte	RRSCOs	Result	Q	Result	Q	Result	Q	Result	Q	Result	Q	Result	Q	Result	Q	Result	Q
Pesticides (µg/kg)																	
Aldrin	97	ND< 3.08	U	ND< 2.97	U	ND< 3.01	U	ND< 3.21	U	ND< 3.21	U	ND< 2.94	U	ND< 3.35	U	ND< 3.39	U
Alpha Bhc (Alpha Hexachlorocyclohexane)	480	ND< 3.08	U	ND< 2.97	U	ND< 3.01	U	ND< 3.21	U	ND< 3.21	U	ND< 2.94	U	ND< 3.35	U	ND< 3.39	U
Alpha Chlordane	4200	ND< 3.08	U	ND< 2.97	U	ND< 3.01	U	ND< 3.21	U	ND< 3.21	U	1.76	JP	ND< 3.35	U	ND< 3.39	U
Alpha Endosulfan	24000	ND< 3.08	U	ND< 2.97	U	ND< 3.01	U	ND< 3.21	U	ND< 3.21	U	2.54	J	ND< 3.35	U	ND< 3.39	U
Beta Bhc (Beta Hexachlorocyclohexane)	360	ND< 3.08	U	ND< 2.97	U	ND< 3.01	U	ND< 3.21	U	ND< 3.21	U	8.99	P	ND< 3.35	U	ND< 3.39	U
Beta Endosulfan	24000	ND< 3.08	U	ND< 2.97	U	ND< 3.01	U	ND< 3.21	U	ND< 3.21	U	17.7		ND< 3.35	U	ND< 3.39	U
Chlordane																	
Delta BHC (Delta Hexachlorocyclohexane)	100000	ND< 3.08	U	ND< 2.97	U	ND< 3.01	U	ND< 3.21	U	ND< 3.21	U	3.12	P	ND< 3.35	U	ND< 3.39	U
Dieldrin	200	ND< 3.08	U	ND< 2.97	U	ND< 3.01	U	ND< 3.21	U	ND< 3.21	U	2.30	JP	ND< 3.35	U	ND< 3.39	U
Endosulfan Sulfate	24000	1.77	JP	ND< 2.97	U	ND< 3.01	U	ND< 3.21	U	4.07	P	6.85	P	3.28	J	ND< 3.39	U
Endrin	11000	ND< 3.08	U	ND< 2.97	U	ND< 3.01	U	1.64	JP	4.65	P	14.4		1.93	JP	ND< 3.39	U
Endrin Aldehyde		1.68	JP	ND< 2.97	U	ND< 3.01	U	ND< 3.21	U	ND< 3.21	U	ND< 2.94	U	6.02		ND< 3.39	U
Endrin Ketone		ND< 3.08	U	ND< 2.97	U	ND< 3.01	U	ND< 3.21	U	ND< 3.21	U	2.69	JP	3.59	P	1.71	J
Gamma Bhc (Lindane)	1300	ND< 3.08	U	ND< 2.97	U	ND< 3.01	U	ND< 3.21	U	ND< 3.21	U	4.33		ND< 3.35	U	ND< 3.39	U
Gamma Chlordane		ND< 3.08	U	ND< 2.97	U	ND< 3.01	U	1.93	JP	1.97	JP	9.12	P	ND< 3.35	U	ND< 3.39	U
Heptachlor	2100	ND< 3.08	U	ND< 2.97	U	ND< 3.01	U	ND< 3.21	U	ND< 3.21	U	ND< 2.94	U	ND< 3.35	U	ND< 3.39	U
Heptachlor Epoxide		ND< 3.08	U	ND< 2.97	U	ND< 3.01	U	ND< 3.21	U	ND< 3.21	U	3.87	P	ND< 3.35	U	ND< 3.39	U
Methoxychlor		3.14	P	ND< 2.97	U	ND< 3.01	U	8.97	P	ND< 3.21	U	20.3	P	2.28	JP	3.40	P
P,P'-DDD	13000	4.67		ND< 2.97	U	ND< 3.01	U	2.88	J	ND< 3.21	U	18.4		3.30	JP	ND< 3.39	U
P,P'-DDE	8900	2.70	J	ND< 2.97	U	ND< 3.01	U	3.98		4.81		11.6	P	1.79	J	ND< 3.39	U
P,P'-DDT	7900	13.5		ND< 2.97	U	ND< 3.01	U	5.75		5.41		6.79	P	6.65		1.72	J
Toxaphene		ND< 30.8	U	ND< 29.7	U	ND< 30.1	U	ND< 32.1	U	ND< 32.1	U	ND< 29.4	U	ND< 33.5	U	ND< 33.9	U
Herbicides (µg/kg)																	
Silvex (2,4,5-TP)	100000	ND< 13	U	ND< 13	U	ND< 12	U	ND< 14	U	ND< 14	U	ND< 14	U	ND< 14	U	ND< 14	U
PCBs (mg/kg)																	
PCB-1016 (Aroclor 1016)		ND< 0.0308	U	ND< 0.0297	U	ND< 0.0301	U	ND< 0.0321	U	ND< 0.0321	U	ND< 0.0294	U	ND< 0.0337	U	ND< 0.0338	U
PCB-1221 (Aroclor 1221)		ND< 0.0308	U	ND< 0.0297	U	ND< 0.0301	U	ND< 0.0321	U	ND< 0.0321	U	ND< 0.0294	U	ND< 0.0337	U	ND< 0.0338	U
PCB-1232 (Aroclor 1232)		ND< 0.0308	U	ND< 0.0297	U	ND< 0.0301	U	ND< 0.0321	U	ND< 0.0321	U	ND< 0.0294	U	ND< 0.0337	U	ND< 0.0338	U
PCB-1242 (Aroclor 1242)		ND< 0.0308	U	ND< 0.0297	U	ND< 0.0301	U	ND< 0.0321	U	ND< 0.0321	U	ND< 0.0294	U	ND< 0.0337	U	ND< 0.0338	U
PCB-1248 (Aroclor 1248)		ND< 0.0308	U	ND< 0.0297	U	ND< 0.0301	U	ND< 0.0321	U	ND< 0.0321	U	ND< 0.0294	U	ND< 0.0337	U	ND< 0.0338	U
PCB-1254 (Aroclor 1254)		ND< 0.0308	U	ND< 0.0297	U	ND< 0.0301	U	ND< 0.0321	U	ND< 0.0321	U	ND< 0.0294	U	ND< 0.0337	U	ND< 0.0338	U
PCB-1260 (Aroclor 1260)		0.0194	J	ND< 0.0297	U	ND< 0.0301	U	ND< 0.0321	U	ND< 0.0321	U	ND< 0.0294	U	ND< 0.0337	U	ND< 0.0338	U
PCB-1262 (Aroclor 1262)		ND< 0.0308	U	ND< 0.0297	U	ND< 0.0301	U	ND< 0.0321	U	ND< 0.0321	U	ND< 0.0294	U	ND< 0.0337	U	ND< 0.0338	U
PCB-1268 (Aroclor 1268)		ND< 0.0308	U	ND< 0.0297	U	ND< 0.0301	U	ND< 0.0321	U	ND< 0.0321	U	ND< 0.0294	U	ND< 0.0337	U	ND< 0.0338	U

NOTES:

1. Soil sample analytical results are compared to the New York State Department of Environmental Conservation (NYSDEC) Title 6 of the official compilation of New York Codes, Rules, and Regulations (NYCRR) Part 375 Restricted Residential Soil Cleanup Objectives (RRSCOs).
2. RRSCO exceedances are in bold and highlighted yellow.
3. ND = Not Detected
4. Results shown as "ND" with Reporting Limits exceeding RRSCOs are in bold.
5. PCBs = Polychlorinated Biphenyls
6. µg/kg = micrograms per kilogram.
7. mg/kg = milligrams per kilogram.
8. Qualifier (Q) definitions are provided in the official lab reports.

TABLE 1D: Pesticides, Herbicides, and PCBs in Soil
AOC-1 - Power House and Former Coal Storage Area
Soil Sample Results (non-QA/QC)
Hudson River Psychiatric Center - North BCP Site, Poughkeepsie, NY
PVE Sheffler File #560909

	Date Sampled	7/15/2014		5/7/2014		5/12/2014		12/18/2014		12/18/2014		5/7/2014		5/7/2014		5/7/2014	
	Location	PH-10		PH-12		PH-12		PH-23		PH-23		PH-SS-1		PH-SS-1		PH-SS-1	
	Sample ID	PH-10 12.5-14'		PH-12 0-2"		PH-12 1-2'		PH-23 2-5'		PH-23 8-10'		PH-SS-1 0-2"		PH-SS-1 1-2'		PH-SS-1 2-3'	
Analyte	RRSCOs	Result	Q	Result	Q	Result	Q	Result	Q	Result	Q	Result	Q	Result	Q	Result	Q
Pesticides (µg/kg)																	
Aldrin	97	ND< 3.05	U	ND< 2.93	U	ND< 3.90	U	ND< 3.35	U	ND< 3.13	U	ND< 3.98	U	ND< 3.21	U	ND< 3.25	U
Alpha Bhc (Alpha Hexachlorocyclohexane)	480	ND< 3.05	U	ND< 2.93	U	ND< 3.90	U	ND< 3.35	U	ND< 3.13	U	ND< 3.98	U	ND< 3.21	U	ND< 3.25	U
Alpha Chlordane	4200	ND< 3.05	U	ND< 2.93	U	ND< 3.90	U	ND< 3.35	U	ND< 3.13	U	ND< 3.98	U	ND< 3.21	U	ND< 3.25	U
Alpha Endosulfan	24000	ND< 3.05	U	ND< 2.93	U	ND< 3.90	U	ND< 3.35	U	ND< 3.13	U	ND< 3.98	U	ND< 3.21	U	ND< 3.25	U
Beta Bhc (Beta Hexachlorocyclohexane)	360	ND< 3.05	U	ND< 2.93	U	ND< 3.90	U	ND< 3.35	U	ND< 3.13	U	ND< 3.98	U	ND< 3.21	U	ND< 3.25	U
Beta Endosulfan	24000	ND< 3.05	U	ND< 2.93	U	ND< 3.90	U	ND< 3.35	U	ND< 3.13	U	ND< 3.98	U	ND< 3.21	U	ND< 3.25	U
Chlordane																	
Delta BHC (Delta Hexachlorocyclohexane)	100000	ND< 3.05	U	ND< 2.93	U	ND< 3.90	U	ND< 3.35	U	ND< 3.13	U	ND< 3.98	U	ND< 3.21	U	ND< 3.25	U
Dieldrin	200	ND< 3.05	U	ND< 2.93	U	ND< 3.90	U	ND< 3.35	U	ND< 3.13	U	ND< 3.98	U	ND< 3.21	U	ND< 3.25	U
Endosulfan Sulfate	24000	ND< 3.05	U	ND< 2.93	U	ND< 3.90	U	ND< 3.35	U	ND< 3.13	U	3.12	J	ND< 3.21	U	ND< 3.25	U
Endrin	11000	ND< 3.05	U	ND< 2.93	U	ND< 3.90	U	ND< 3.35	U	ND< 3.13	U	3.19	JP	ND< 3.21	U	ND< 3.25	U
Endrin Aldehyde		ND< 3.05	U	ND< 2.93	U	ND< 3.90	U	ND< 3.35	U	ND< 3.13	U	ND< 3.98	U	ND< 3.21	U	ND< 3.25	U
Endrin Ketone		ND< 3.05	U	ND< 2.93	U	ND< 3.90	U	ND< 3.35	U	ND< 3.13	U	2.95	JP	ND< 3.21	U	ND< 3.25	U
Gamma Bhc (Lindane)	1300	ND< 3.05	U	ND< 2.93	U	ND< 3.90	U	ND< 3.35	U	ND< 3.13	U	ND< 3.98	U	ND< 3.21	U	ND< 3.25	U
Gamma Chlordane		ND< 3.05	U	ND< 2.93	U	ND< 3.90	U	ND< 3.35	U	ND< 3.13	U	ND< 3.98	U	ND< 3.21	U	ND< 3.25	U
Heptachlor	2100	ND< 3.05	U	ND< 2.93	U	ND< 3.90	U	ND< 3.35	U	ND< 3.13	U	ND< 3.98	U	ND< 3.21	U	ND< 3.25	U
Heptachlor Epoxide		ND< 3.05	U	ND< 2.93	U	ND< 3.90	U	ND< 3.35	U	ND< 3.13	U	ND< 3.98	U	ND< 3.21	U	ND< 3.25	U
Methoxychlor		ND< 3.05	U	ND< 2.93	U	ND< 3.90	U	ND< 3.35	U	ND< 3.13	U	ND< 3.98	U	ND< 3.21	U	ND< 3.25	U
P,P'-DDD	13000	ND< 3.05	U	ND< 2.93	U	ND< 3.90	U	ND< 3.35	U	ND< 3.13	U	ND< 3.98	U	ND< 3.21	U	ND< 3.25	U
P,P'-DDE	8900	ND< 3.05	U	ND< 2.93	U	ND< 3.90	U	ND< 3.35	U	ND< 3.13	U	7.56	P	ND< 3.21	U	ND< 3.25	U
P,P'-DDT	7900	ND< 3.05	U	ND< 2.93	U	ND< 3.90	U	ND< 3.35	U	ND< 3.13	U	8.96	M	ND< 3.21	U	ND< 3.25	U
Toxaphene		ND< 30.5	U	ND< 29.3	U	ND< 39.0	U	ND< 33.5	U	ND< 31.3	U	ND< 39.8	U	ND< 32.1	U	ND< 32.5	U
Herbicides (µg/kg)																	
Silvex (2,4,5-TP)	100000	ND< 13	U	ND< 12	U	ND< 14	U	ND< 15	U	ND< 15	U	ND< 16	U	ND< 14	U	ND< 13	U
PCBs (mg/kg)																	
PCB-1016 (Aroclor 1016)		ND< 0.0304	U	ND< 0.0293	U	ND< 0.0390	U	ND< 0.0335	U	ND< 0.0313	U	ND< 0.0398	U	ND< 0.0321	U	ND< 0.0325	U
PCB-1221 (Aroclor 1221)		ND< 0.0304	U	ND< 0.0293	U	ND< 0.0390	U	ND< 0.0335	U	ND< 0.0313	U	ND< 0.0398	U	ND< 0.0321	U	ND< 0.0325	U
PCB-1232 (Aroclor 1232)		ND< 0.0304	U	ND< 0.0293	U	ND< 0.0390	U	ND< 0.0335	U	ND< 0.0313	U	ND< 0.0398	U	ND< 0.0321	U	ND< 0.0325	U
PCB-1242 (Aroclor 1242)		ND< 0.0304	U	ND< 0.0293	U	ND< 0.0390	U	ND< 0.0335	U	ND< 0.0313	U	ND< 0.0398	U	ND< 0.0321	U	ND< 0.0325	U
PCB-1248 (Aroclor 1248)		ND< 0.0304	U	ND< 0.0293	U	ND< 0.0390	U	ND< 0.0335	U	ND< 0.0313	U	ND< 0.0398	U	ND< 0.0321	U	ND< 0.0325	U
PCB-1254 (Aroclor 1254)		ND< 0.0304	U	ND< 0.0293	U	ND< 0.0390	U	ND< 0.0335	U	ND< 0.0313	U	ND< 0.0398	U	ND< 0.0321	U	ND< 0.0325	U
PCB-1260 (Aroclor 1260)		ND< 0.0304	U	ND< 0.0293	U	ND< 0.0390	U	ND< 0.0335	U	ND< 0.0313	U	0.0243	J	ND< 0.0321	U	ND< 0.0325	U
PCB-1262 (Aroclor 1262)		ND< 0.0304	U	ND< 0.0293	U	ND< 0.0390	U	ND< 0.0335	U	ND< 0.0313	U	ND< 0.0398	U	ND< 0.0321	U	ND< 0.0325	U
PCB-1268 (Aroclor 1268)		ND< 0.0304	U	ND< 0.0293	U	ND< 0.0390	U	ND< 0.0335	U	ND< 0.0313	U	ND< 0.0398	U	ND< 0.0321	U	ND< 0.0325	U

NOTES:

1. Soil sample analytical results are compared to the New York State Department of Environmental Conservation (NYSDEC) Title 6 of the official compilation of New York Codes, Rules, and Regulations (NYCRR) Part 375 Restricted Residential Soil Cleanup Objectives (RRSCOs).
2. RRSCO exceedances are in bold and highlighted yellow.
3. ND = Not Detected
4. Results shown as "ND" with Reporting Limits exceeding RRSCOs are in bold.
5. PCBs = Polychlorinated Biphenyls
6. µg/kg = micrograms per kilogram.
7. mg/kg = milligrams per kilogram.
8. Qualifier (Q) definitions are provided in the official lab reports.

TABLE 1D: Pesticides, Herbicides, and PCBs in Soil
AOC-1 - Power House and Former Coal Storage Area
Soil Sample Results (non-QA/QC)
Hudson River Psychiatric Center - North BCP Site, Poughkeepsie, NY
PVE Sheffler File #560909

	Date Sampled	5/6/2014		5/7/2014		5/7/2014		5/6/2014		5/6/2014		5/6/2014		7/17/2014		7/17/2014	
	Location	PH-SS-4		PH-SS-4		PH-SS-4		PH-SS-5		PH-SS-6		PH-SS-6		PH-SS-7		PH-SS-7	
	Sample ID	PH-SS-4 0-2"		PH-SS-4 1-2'		PH-SS-4 4-5'		PH-SS-5 1-2'		PH-SS-6 0-2"		PH-SS-6 1-2'		PH-SS-7 0-2"		PH-SS-7 1-2'	
Analyte	RRSCOs	Result	Q	Result	Q	Result	Q	Result	Q	Result	Q	Result	Q	Result	Q	Result	Q
Pesticides (µg/kg)																	
Aldrin	97	ND< 2.0	U	ND< 3.07	U	ND< 3.03	U			ND< 2.2	U	ND< 2.0	U	ND< 3.06	U	ND< 3.03	U
Alpha Bhc (Alpha Hexachlorocyclohexane)	480	ND< 2.0	U	ND< 3.07	U	ND< 3.03	U			ND< 2.2	U	ND< 2.0	U	ND< 3.06	U	ND< 3.03	U
Alpha Chlordane	4200	ND< 2.0	U	ND< 3.07	U	ND< 3.03	U			ND< 2.2	U	ND< 2.0	U	1.81	JP	ND< 3.03	U
Alpha Endosulfan	24000	ND< 2.0	U	ND< 3.07	U	ND< 3.03	U			ND< 2.2	U	ND< 2.0	U	ND< 3.06	U	ND< 3.03	U
Beta Bhc (Beta Hexachlorocyclohexane)	360	ND< 2.0	U	ND< 3.07	U	ND< 3.03	U			ND< 2.2	U	ND< 2.0	U	ND< 3.06	U	ND< 3.03	U
Beta Endosulfan	24000	ND< 4.0	U	ND< 3.07	U	ND< 3.03	U			ND< 4.3	U	ND< 4.0	U	ND< 3.06	U	ND< 3.03	U
Chlordane		ND< 2.00	U							ND< 220	U	ND< 200	U				
Delta BHC (Delta Hexachlorocyclohexane)	100000	ND< 2.0	U	ND< 3.07	U	ND< 3.03	U			ND< 2.2	U	ND< 2.0	U	1.93	JP	ND< 3.03	U
Dieldrin	200	ND< 4.0	U	ND< 3.07	U	ND< 3.03	U			ND< 4.3	U	ND< 4.0	U	1.95	JP	ND< 3.03	U
Endosulfan Sulfate	24000	ND< 4.0	U	ND< 3.07	U	ND< 3.03	U			ND< 4.3	U	ND< 4.0	U	ND< 3.06	U	2.46	JP
Endrin	11000	ND< 4.0	U	ND< 3.07	U	ND< 3.03	U			ND< 4.3	U	ND< 4.0	U	ND< 3.06	U	3.00	JP
Endrin Aldehyde		ND< 4.0	U	ND< 3.07	U	ND< 3.03	U			ND< 4.3	U	ND< 4.0	U	4.67	P	3.38	
Endrin Ketone		ND< 4.0	U	ND< 3.07	U	ND< 3.03	U			ND< 4.3	U	ND< 4.0	U	9.05	P	2.04	JP
Gamma Bhc (Lindane)	1300	ND< 2.0	U	ND< 3.07	U	ND< 3.03	U			ND< 2.2	U	ND< 2.0	U	ND< 3.06	U	ND< 3.03	U
Gamma Chlordane		ND< 2.0	U	ND< 3.07	U	ND< 3.03	U			ND< 2.2	U	ND< 2.0	U	ND< 3.06	U	ND< 3.03	U
Heptachlor	2100	ND< 2.0	U	ND< 3.07	U	ND< 3.03	U			ND< 2.2	U	ND< 2.0	U	ND< 3.06	U	ND< 3.03	U
Heptachlor Epoxide		ND< 2.0	U	ND< 3.07	U	ND< 3.03	U			ND< 2.2	U	ND< 2.0	U	ND< 3.06	U	ND< 3.03	U
Methoxychlor		ND< 20	U	ND< 3.07	U	ND< 3.03	U			ND< 22	U	ND< 20	U	10.6	P	5.23	P
P,P'-DDD	13000	ND< 4.0	U	ND< 3.07	U	ND< 3.03	U			ND< 4.3	U	ND< 4.0	U	2.12	JP	1.87	JP
P,P'-DDE	8900	ND< 4.0	U	ND< 3.07	U	ND< 3.03	U			ND< 4.3	U	ND< 4.0	U	ND< 3.06	U	ND< 3.03	U
P,P'-DDT	7900	ND< 4.0	U	ND< 3.07	U	ND< 3.03	U			4.90		ND< 4.0	U	2.61	JP	1.85	JP
Toxaphene		ND< 200	U	ND< 30.7	U	ND< 30.3	U			ND< 220	U	ND< 200	U	ND< 30.6	U	ND< 30.3	U
Herbicides (µg/kg)																	
Silvex (2,4,5-TP)	100000	ND< 240	U	ND< 13	U	ND< 13	U			ND< 16	U	ND< 14	U	ND< 13	U	ND< 13	U
PCBs (mg/kg)																	
PCB-1016 (Aroclor 1016)		ND< 0.0344	U	ND< 0.0307	U	ND< 0.0303	U	ND< 0.0347	U	ND< 0.0359	U	ND< 0.0341	U	ND< 0.0305	U	ND< 0.0304	U
PCB-1221 (Aroclor 1221)		ND< 0.0344	U	ND< 0.0307	U	ND< 0.0303	U	ND< 0.0347	U	ND< 0.0359	U	ND< 0.0341	U	ND< 0.0305	U	ND< 0.0304	U
PCB-1232 (Aroclor 1232)		ND< 0.0344	U	ND< 0.0307	U	ND< 0.0303	U	ND< 0.0347	U	ND< 0.0359	U	ND< 0.0341	U	ND< 0.0305	U	ND< 0.0304	U
PCB-1242 (Aroclor 1242)		ND< 0.0344	U	ND< 0.0307	U	ND< 0.0303	U	ND< 0.0347	U	ND< 0.0359	U	ND< 0.0341	U	ND< 0.0305	U	ND< 0.0304	U
PCB-1248 (Aroclor 1248)		ND< 0.0344	U	ND< 0.0307	U	ND< 0.0303	U	ND< 0.0347	U	ND< 0.0359	U	ND< 0.0341	U	ND< 0.0305	U	ND< 0.0304	U
PCB-1254 (Aroclor 1254)		ND< 0.0344	U	ND< 0.0307	U	ND< 0.0303	U	ND< 0.0347	U	ND< 0.0359	U	ND< 0.0341	U	ND< 0.0305	U	ND< 0.0304	U
PCB-1260 (Aroclor 1260)		ND< 0.0344	U	ND< 0.0307	U	ND< 0.0303	U	0.0238	J	0.0374		ND< 0.0341	U	ND< 0.0305	U	ND< 0.0304	U
PCB-1262 (Aroclor 1262)		ND< 0.0344	U	ND< 0.0307	U	ND< 0.0303	U	ND< 0.0347	U	ND< 0.0359	U	ND< 0.0341	U	ND< 0.0305	U	ND< 0.0304	U
PCB-1268 (Aroclor 1268)		ND< 0.0344	U	ND< 0.0307	U	ND< 0.0303	U	ND< 0.0347	U	ND< 0.0359	U	ND< 0.0341	U	ND< 0.0305	U	ND< 0.0304	U

NOTES:

1. Soil sample analytical results are compared to the New York State Department of Environmental Conservation (NYSDEC) Title 6 of the official compilation of New York Codes, Rules, and Regulations (NYCRR) Part 375 Restricted Residential Soil Cleanup Objectives (RRSCOs).
2. RRSCO exceedances are in bold and highlighted yellow.
3. ND = Not Detected
4. Results shown as "ND" with Reporting Limits exceeding RRSCOs are in bold.
5. PCBs = Polychlorinated Biphenyls
6. µg/kg = micrograms per kilogram.
7. mg/kg = milligrams per kilogram.
8. Qualifier (Q) definitions are provided in the official lab reports.

TABLE 1D: Pesticides, Herbicides, and PCBs in Soil
AOC-1 - Power House and Former Coal Storage Area
Soil Sample Results (non-QA/QC)
Hudson River Psychiatric Center - North BCP Site, Poughkeepsie, NY
PVE Sheffler File #560909

	Date Sampled	11/25/2014		12/15/2014		11/25/2014		12/15/2014		11/25/2014		12/15/2014	
	Location	PH-SS-8		PH-SS-8		PH-SS-9		PH-SS-9		PH-SS-10		PH-SS-10	
	Sample ID	PH-SS-8 (0-2")		20141215		PH-SS-9 (0-2")		PH-SS-9 2-24"		PH-SS-10 (0-2")		PH-SS-10 2-24"	
Analyte	RRSCOs	Result	Q	Result	Q	Result	Q	Result	Q	Result	Q	Result	Q
Pesticides (µg/kg)													
Aldrin	97	ND< 3.74	U	ND< 3.37	U	1.79	J	1.81	JP	6.93	P	4.05	
Alpha Bhc (Alpha Hexachlorocyclohexane)	480	2.31	J	1.84	JP	ND< 3.41	U	2.02	J	ND< 3.15	U	2.34	J
Alpha Chlordane	4200	10.1		22.0		ND< 3.41	U	ND< 3.32	U	2.00	JP	3.02	JP
Alpha Endosulfan	24000	ND< 3.74	U	ND< 3.37	U	ND< 3.41	U	ND< 3.32	U	3.89		ND< 3.34	U
Beta Bhc (Beta Hexachlorocyclohexane)	360	2.62	JP	ND< 3.37	U	ND< 3.41	U	3.34	P	3.08	JP	2.86	JP
Beta Endosulfan	24000	3.35	JP	ND< 3.37	U	ND< 3.41	U	ND< 3.32	U	ND< 3.15	U	2.57	JP
Chlordane													
Delta BHC (Delta Hexachlorocyclohexane)	100000	ND< 3.74	U	ND< 3.37	U	2.12	JP	ND< 3.32	U	4.37		2.13	JP
Dieldrin	200	ND< 3.74	U	ND< 3.37	U	ND< 3.41	U	2.25	JP	ND< 3.15	U	6.09	P
Endosulfan Sulfate	24000	5.28	P	ND< 3.37	U	3.97	P	ND< 3.32	U	6.84	P	ND< 3.34	U
Endrin	11000	4.17	P	6.84	P	7.52	P	5.61	P	3.25	P	3.50	P
Endrin Aldehyde		3.02	JP	3.52		6.47	P	5.80		26.4		10.3	
Endrin Ketone		2.87	JP	8.72		3.59		3.40		11.2	P	12.4	
Gamma Bhc (Lindane)	1300	ND< 3.74	U	ND< 3.37	U	ND< 3.41	U	ND< 3.32	U	2.54	JP	ND< 3.34	U
Gamma Chlordane		1.90	JP	ND< 3.37	U	3.72	P	ND< 3.32	U	17.9	P	ND< 3.34	U
Heptachlor	2100	ND< 3.74	U	ND< 3.37	U	ND< 3.41	U	ND< 3.32	U	ND< 3.15	U	2.37	J
Heptachlor Epoxide		ND< 3.74	U	ND< 3.37	U	ND< 3.41	U	ND< 3.32	U	3.15	JP	ND< 3.34	U
Methoxychlor		ND< 3.74	U	6.86	P	5.78	P	4.04	P	20.8	P	6.52	P
P,P'-DDD	13000	ND< 3.74	U	2.33	JP	4.19	P	ND< 3.32	U	9.14	P	ND< 3.34	U
P,P'-DDE	8900	3.23	JP	2.07	JP	1.83	JP	1.75	J	3.59	P	24.8	
P,P'-DDT	7900	7.70		2.92	JP	6.82		3.71		16.2		35.2	
Toxaphene		ND< 37.4	U	ND< 33.7	U	ND< 34.1	U	ND< 33.2	U	ND< 31.5	U	ND< 33.4	U
Herbicides (µg/kg)													
Silvex (2,4,5-TP)	100000	ND< 17	U	ND< 14	U	ND< 15	U	ND< 15	U	ND< 16	U	ND< 14	U
PCBs (mg/kg)													
PCB-1016 (Aroclor 1016)		ND< 0.0374	U	ND< 0.0337	U	ND< 0.0341	U	ND< 0.0332	U	ND< 0.0315	U	ND< 0.0334	U
PCB-1221 (Aroclor 1221)		ND< 0.0374	U	ND< 0.0337	U	ND< 0.0341	U	ND< 0.0332	U	ND< 0.0315	U	ND< 0.0334	U
PCB-1232 (Aroclor 1232)		ND< 0.0374	U	ND< 0.0337	U	ND< 0.0341	U	ND< 0.0332	U	ND< 0.0315	U	ND< 0.0334	U
PCB-1242 (Aroclor 1242)		ND< 0.0374	U	ND< 0.0337	U	ND< 0.0341	U	ND< 0.0332	U	ND< 0.0315	U	ND< 0.0334	U
PCB-1248 (Aroclor 1248)		ND< 0.0374	U	ND< 0.0337	U	ND< 0.0341	U	ND< 0.0332	U	ND< 0.0315	U	ND< 0.0334	U
PCB-1254 (Aroclor 1254)		ND< 0.0374	U	ND< 0.0337	U	ND< 0.0341	U	ND< 0.0332	U	ND< 0.0315	U	ND< 0.0334	U
PCB-1260 (Aroclor 1260)		0.0438		ND< 0.0337	U	ND< 0.0341	U	ND< 0.0332	U	0.0402		0.0684	
PCB-1262 (Aroclor 1262)		ND< 0.0374	U	ND< 0.0337	U	ND< 0.0341	U	ND< 0.0332	U	ND< 0.0315	U	ND< 0.0334	U
PCB-1268 (Aroclor 1268)		ND< 0.0374	U	ND< 0.0337	U	ND< 0.0341	U	ND< 0.0332	U	ND< 0.0315	U	ND< 0.0334	U

NOTES:

1. Soil sample analytical results are compared to the New York State Department of Environmental Conservation (NYSDEC) Title 6 of the official compilation of New York Codes, Rules, and Regulations (NYCRR) Part 375 Restricted Residential Soil Cleanup Objectives (RRSCOs).
2. RRSCO exceedances are in bold and highlighted yellow.
3. ND = Not Detected
4. Results shown as "ND" with Reporting Limits exceeding RRSCOs are in bold.
5. PCBs = Polychlorinated Biphenyls
6. µg/kg = micrograms per kilogram.
7. mg/kg = milligrams per kilogram.
8. Qualifier (Q) definitions are provided in the official lab reports.

Table 2A – VOCs in Soil – AOC-2

TABLE 2A: Volatile Organic Compounds (VOCs) in Soil
AOC-2 - Auto Garage Area
Soil Sample Results (non-QA/QC)
Hudson River Psychiatric Center - North BCP Site, Poughkeepsie, NY
PVE Sheffler File #560909

	Date Sampled	5/13/2014		7/14/2014		5/13/2014		7/14/2014		7/14/2014		7/14/2014		7/14/2014		7/14/2014		7/14/2014		7/14/2014		7/14/2014		7/14/2014		7/14/2014	
	Location	AG-1		AG-1		AG-2		AG-2		AG-3		AG-3		AG-4		AG-4		AG-5		AG-5		AG-6		AG-6			
	Sample ID	AG-1 2.5-4		AG-1 8.5-10'		AG-2 1-3		AG-2 8-9'		AG-3 1-2.5'		AG-3 15-17'		AG-4 4.25-5'		AG-4 7.5-9'		AG-5 3-4'		AG-5 8-9'		AG-6 2-4'		AG-6 8-10'			
Analyte	RRSCOs	Result	Q	Result	Q	Result	Q	Result	Q	Result	Q	Result	Q	Result	Q	Result	Q	Result	Q	Result	Q	Result	Q	Result	Q		
VOCs (µg/kg)																											
1,1,1-Trichloroethane	100000	ND< 2.27	U	ND< 1.82	UJL	ND< 1.78	U	ND< 1.64	UJL	ND< 1.86	UJL	ND< 1.62	UJL	ND< 1.68	UJL	ND< 1.88	UJL	ND< 2.15	UJL	ND< 1.78	UJL	ND< 1.79	UJL	ND< 1.93	UJL		
1,1,2,2-Tetrachloroethane		ND< 2.27	U	ND< 1.82	UJL	ND< 1.78	U	ND< 1.64	UJL	ND< 1.86	UJL	ND< 1.62	UJL	ND< 1.68	UJL	ND< 1.88	UJL	ND< 2.15	UJL	ND< 1.78	UJL	ND< 1.79	UJL	ND< 1.93	UJL		
1,1,2-Trichloro-1,2,2-Trifluoroethane		ND< 2.27	U	ND< 1.82	UJL	ND< 1.78	U	ND< 1.64	UJL	ND< 1.86	UJL	ND< 1.62	UJL	ND< 1.68	UJL	ND< 1.88	UJL	ND< 2.15	UJL	ND< 1.78	UJL	ND< 1.79	UJL	ND< 1.93	UJL		
1,1,2-Trichloroethane		ND< 2.27	U	ND< 1.82	UJL	ND< 1.78	U	ND< 1.64	UJL	ND< 1.86	UJL	ND< 1.62	UJL	ND< 1.68	UJL	ND< 1.88	UJL	ND< 2.15	UJL	ND< 1.78	UJL	ND< 1.79	UJL	ND< 1.93	UJL		
1,1-Dichloroethane	26000	ND< 2.27	U	ND< 1.82	UJL	ND< 1.78	U	ND< 1.64	UJL	ND< 1.86	UJL	ND< 1.62	UJL	ND< 1.68	UJL	ND< 1.88	UJL	ND< 2.15	UJL	ND< 1.78	UJL	ND< 1.79	UJL	ND< 1.93	UJL		
1,1-Dichloroethene	100000	ND< 2.27	U	ND< 1.82	UJL	ND< 1.78	U	ND< 1.64	UJL	ND< 1.86	UJL	ND< 1.62	UJL	ND< 1.68	UJL	ND< 1.88	UJL	ND< 2.15	UJL	ND< 1.78	UJL	ND< 1.79	UJL	ND< 1.93	UJL		
1,2,3-Trichlorobenzene		ND< 5.69	U	ND< 4.55	UJL	ND< 4.46	U	ND< 4.09	UJL	ND< 4.66	UJL	ND< 4.05	UJL	ND< 4.20	UJL	ND< 4.70	UJL	ND< 5.39	UJL	ND< 4.44	UJL	ND< 4.47	UJL	ND< 4.83	UJL		
1,2,4-Trichlorobenzene		ND< 5.69	U	ND< 4.55	UJL	ND< 4.46	U	ND< 4.09	UJL	ND< 4.66	UJL	ND< 4.05	UJL	ND< 4.20	UJL	ND< 4.70	UJL	ND< 5.39	UJL	ND< 4.44	UJL	ND< 4.47	UJL	ND< 4.83	UJL		
1,2,4-Trimethylbenzene	52000	ND< 2.27	U	ND< 1.82	UJL	ND< 1.78	U	ND< 1.64	UJL	ND< 1.86	UJL	ND< 1.62	UJL	ND< 1.68	UJL	ND< 1.88	UJL	ND< 2.15	UJL	ND< 1.78	UJL	ND< 1.79	UJL	ND< 1.93	UJL		
1,2-Dibromo-3-Chloropropane		ND< 11.4	U	ND< 9.09	UJL	ND< 8.92	U	ND< 8.18	UJL	ND< 9.31	UJL	ND< 8.10	UJL	ND< 8.40	UJL	ND< 9.39	UJL	ND< 10.8	UJL	ND< 8.88	UJL	ND< 8.95	UJL	ND< 9.67	UJL		
1,2-Dibromoethane (Ethylene Dibromide)		ND< 2.27	U	ND< 1.82	UJL	ND< 1.78	U	ND< 1.64	UJL	ND< 1.86	UJL	ND< 1.62	UJL	ND< 1.68	UJL	ND< 1.88	UJL	ND< 2.15	UJL	ND< 1.78	UJL	ND< 1.79	UJL	ND< 1.93	UJL		
1,2-Dichlorobenzene	100000	ND< 2.27	U	ND< 1.82	UJL	ND< 1.78	U	ND< 1.64	UJL	ND< 1.86	UJL	ND< 1.62	UJL	ND< 1.68	UJL	ND< 1.88	UJL	ND< 2.15	UJL	ND< 1.78	UJL	ND< 1.79	UJL	ND< 1.93	UJL		
1,2-Dichloroethane	3100	ND< 2.27	U	ND< 1.82	UJL	ND< 1.78	U	ND< 1.64	UJL	ND< 1.86	UJL	ND< 1.62	UJL	ND< 1.68	UJL	ND< 1.88	UJL	ND< 2.15	UJL	ND< 1.78	UJL	ND< 1.79	UJL	ND< 1.93	UJL		
1,2-Dichloropropane		ND< 2.27	U	ND< 1.82	UJL	ND< 1.78	U	ND< 1.64	UJL	ND< 1.86	UJL	ND< 1.62	UJL	ND< 1.68	UJL	ND< 1.88	UJL	ND< 2.15	UJL	ND< 1.78	UJL	ND< 1.79	UJL	ND< 1.93	UJL		
1,3,5-Trimethylbenzene (Mesitylene)	52000	ND< 2.27	U	ND< 1.82	UJL	ND< 1.78	U	ND< 1.64	UJL	ND< 1.86	UJL	ND< 1.62	UJL	ND< 1.68	UJL	ND< 1.88	UJL	ND< 2.15	UJL	ND< 1.78	UJL	ND< 1.79	UJL	ND< 1.93	UJL		
1,3-Dichlorobenzene	49000	ND< 2.27	U	ND< 1.82	UJL	ND< 1.78	U	ND< 1.64	UJL	ND< 1.86	UJL	ND< 1.62	UJL	ND< 1.68	UJL	ND< 1.88	UJL	ND< 2.15	UJL	ND< 1.78	UJL	ND< 1.79	UJL	ND< 1.93	UJL		
1,4-Dichlorobenzene	13000	ND< 2.27	U	ND< 1.82	UJL	ND< 1.78	U	ND< 1.64	UJL	ND< 1.86	UJL	ND< 1.62	UJL	ND< 1.68	UJL	ND< 1.88	UJL	ND< 2.15	UJL	ND< 1.78	UJL	ND< 1.79	UJL	ND< 1.93	UJL		
1,4-Dioxane (P-Dioxane)	13000	ND< 22.7	U	ND< 18.2	UJL	ND< 17.8	U	ND< 16.4	UJL	ND< 18.6	UJL	ND< 16.2	UJL	ND< 16.8	UJL	ND< 18.8	UJL	ND< 21.5	UJL	ND< 17.8	UJL	ND< 17.9	UJL	ND< 19.3	UJL		
2-Hexanone		ND< 5.69	U	ND< 4.55	UJL	ND< 4.46	U	ND< 4.09	UJL	ND< 4.66	UJL	ND< 4.05	UJL	ND< 4.20	UJL	ND< 4.70	UJL	ND< 5.39	UJL	ND< 4.44	UJL	ND< 4.47	UJL	ND< 4.83	UJL		
Acetone	100000	60.3		ND< 9.09	UJL	ND< 8.92	U	ND< 8.18	UJL	ND< 9.31	UJL	ND< 8.10	UJL	ND< 8.40	UJL	11.9	JL	ND< 10.8	UJL	9.92	JL	ND< 8.95	UJL	ND< 9.67	UJL		
Benzene	4800	ND< 2.27	U	ND< 1.82	UJL	ND< 1.78	U	ND< 1.64	UJL	ND< 1.86	UJL	ND< 1.62	UJL	ND< 1.68	UJL	ND< 1.88	UJL	ND< 2.15	UJL	ND< 1.78	UJL	ND< 1.79	UJL	ND< 1.93	UJL		
Bromochloromethane		ND< 5.69	U	ND< 4.55	UJL	ND< 4.46	U	ND< 4.09	UJL	ND< 4.66	UJL	ND< 4.05	UJL	ND< 4.20	UJL	ND< 4.70	UJL	ND< 5.39	UJL	ND< 4.44	UJL	ND< 4.47	UJL	ND< 4.83	UJL		
Bromodichloromethane		ND< 2.27	U	ND< 1.82	UJL	ND< 1.78	U	ND< 1.64	UJL	ND< 1.86	UJL	ND< 1.62	UJL	ND< 1.68	UJL	ND< 1.88	UJL	ND< 2.15	UJL	ND< 1.78	UJL	ND< 1.79	UJL	ND< 1.93	UJL		
Bromoform		ND< 5.69	U	ND< 4.55	UJL	ND< 4.46	U	ND< 4.09	UJL	ND< 4.66	UJL	ND< 4.05	UJL	ND< 4.20	UJL	ND< 4.70	UJL	ND< 5.39	UJL	ND< 4.44	UJL	ND< 4.47	UJL	ND< 4.83	UJL		
Bromomethane		ND< 2.27	U	ND< 1.82	UJL	ND< 1.78	U	ND< 1.64	UJL	ND< 1.86	UJL	ND< 1.62	UJL	ND< 1.68	UJL	ND< 1.88	UJL	ND< 2.15	UJL	ND< 1.78	UJL	ND< 1.79	UJL	ND< 1.93	UJL		
Carbon Disulfide		ND< 2.27	U	ND< 1.82	UJL	ND< 1.78	U	ND< 1.64	UJL	ND< 1.86	UJL	ND< 1.62	UJL	ND< 1.68	UJL	ND< 1.88	UJL	ND< 2.15	UJL	ND< 1.78	UJL	ND< 1.79	UJL	ND< 1.93	UJL		
Carbon Tetrachloride	2400	ND< 2.27	U	ND< 1.82	UJL	ND< 1.78	U	ND< 1.64	UJL	ND< 1.86	UJL	ND< 1.62	UJL	ND< 1.68	UJL	ND< 1.88	UJL	ND< 2.15	UJL	ND< 1.78	UJL	ND< 1.79	UJL	ND< 1.93	UJL		
Chlorobenzene	100000	ND< 2.27	U	ND< 1.82	UJL	ND< 1.78	U	ND< 1.64	UJL	ND< 1.86	UJL	ND< 1.62	UJL	ND< 1.68	UJL	ND< 1.88	UJL	ND< 2.15	UJL	ND< 1.78	UJL	ND< 1.79	UJL	ND< 1.93	UJL		
Chloroethane		ND< 2.27	U	ND< 1.82	UJL	ND< 1.78	U	ND< 1.64	UJL	ND< 1.86	UJL	ND< 1.62	UJL	ND< 1.68	UJL	ND< 1.88	UJL	ND< 2.15	UJL	ND< 1.78	UJL	ND< 1.79	UJL	ND< 1.93	UJL		
Chloroform	49000	ND< 2.27	U	ND< 1.82	UJL	ND< 1.78	U	ND< 1.64	UJL	ND< 1.86	UJL	ND< 1.62	UJL	ND< 1.68	UJL	ND< 1.88	UJL	ND< 2.15	UJL	ND< 1.78	UJL	ND< 1.79	UJL	ND< 1.93	UJL		
Chloromethane		ND< 2.27	U	ND< 1.82	UJL	ND< 1.78	U	ND< 1.64	UJL	ND< 1.86	UJL	ND< 1.62	UJL	ND< 1.68	UJL	ND< 1.88	UJL	ND< 2.15	UJL	ND< 1.78	UJL	ND< 1.79	UJL	ND< 1.93	UJL		
Cis-1,2-Dichloroethylene	100000	ND< 2.27	U	ND< 1.82	UJL	ND< 1.78	U	ND< 1.64	UJL	ND< 1.86	UJL	ND< 1.62	UJL	ND< 1.68	UJL	ND< 1.88	UJL	ND< 2.15	UJL	ND< 1.78	UJL	ND< 1.79	UJL	ND< 1.93	UJL		
Cis-1,3-Dichloropropene		ND< 2.27	U	ND< 1.82	UJL	ND< 1.78	U	ND< 1.64	UJL	ND< 1.86	UJL	ND< 1.62	UJL	ND< 1.68	UJL	ND< 1.88	UJL	ND< 2.15	UJL	ND< 1.78	UJL	ND< 1.79	UJL	ND< 1.93	UJL		
Cyclohexane		ND< 11.4	U	ND< 9.09	UJL	ND< 8.92	U	ND< 8.18	UJL	ND< 9.31	UJL	ND< 8.10	UJL	ND< 8.40	UJL	ND< 9.39	UJL	ND< 10.8	UJL	ND< 8.88	UJL	ND< 8.95	UJL	ND< 9.67	UJL		
Cymene		ND< 2.27	U	ND< 1.82	UJL	ND< 1.78	U	ND< 1.64	UJL	ND< 1.86	UJL	ND< 1.62	UJL	ND< 1.68	UJL	ND< 1.88	UJL	ND< 2.15	UJL	ND< 1.78	UJL	ND< 1.79	UJL	ND< 1.93	UJL		
Dibromochloromethane		ND< 2.27	U	ND< 1.82	UJL	ND< 1.78	U	ND< 1.64	UJL	ND< 1.86	UJL	ND< 1.62	UJL	ND< 1.68	UJL	ND< 1.88	UJL	ND< 2.15	UJL	ND< 1.78	UJL	ND< 1.79	UJL	ND< 1.93	UJL		
Dichlorodifluoromethane		ND< 2.27	U	ND< 1.82	UJL	ND< 1.78	U	ND< 1.64	UJL	ND< 1.86	UJL	ND< 1.62	UJL	ND< 1.68	UJL	ND< 1.88	UJL	ND< 2.15	UJL	ND< 1.78	UJL	ND< 1.79	UJL	ND< 1.93	UJL		
Ethylbenzene	41000	ND< 2.27	U	ND< 1.82	UJL	ND< 1.78	U	ND< 1.64	UJL	ND< 1.86	UJL	ND< 1.62	UJL	ND< 1.68	UJL	ND< 1.88	UJL	ND< 2.15	UJL	ND< 1.78	UJL	ND< 1.79	UJL	ND< 1.93	UJL		
Isopropylbenzene (Cumene)		ND< 2.27	U	ND< 1.82	UJL	ND< 1.78	U	ND< 1.64	UJL	ND< 1.86	UJL	ND< 1.62	UJL	ND< 1.68	UJL	ND< 1.88	UJL	ND< 2.15	UJL	ND< 1.78	UJL	ND< 1.79	UJL	ND< 1.93	UJL		
Methyl Acetate		ND< 2.27	U	ND< 1.82	UJL	ND< 1.78	U	ND< 1.64	UJL	ND< 1.86	UJL	ND< 1.62	UJL	ND< 1.68	UJL	ND< 1.88	UJL	ND< 2.15	UJL	ND< 1.78	UJL	ND< 1.79	UJL	ND< 1.93	UJL		
Methyl Ethyl Ketone (2-Butanone)	100000	9.98	J	ND< 9.09	UJL	ND< 8.92	U	ND< 8.18	UJL	ND< 9.31	UJL	ND< 8.10	UJL	ND< 8.40	UJL	ND< 9.39	UJL	ND< 10.8	UJL	ND< 8.88	UJL	ND< 8.95	UJL	ND< 9.67	UJL		
Methyl Isobutyl Ketone (4-Methyl-2-Pentanone)		ND< 5.69	U	ND< 4.55	UJL	ND< 4.46	U	ND< 4.09	UJL	ND< 4.66	UJL	ND< 4.05	UJL	ND< 4.20	UJL	ND< 4.70	UJL	ND< 5.39	UJL	ND< 4.44	UJL	ND< 4.47	UJL	ND< 4.83	UJL		
Methyl Tert-Butyl Ether (MTBE)	100000	ND< 2.27	U	ND< 1.82	UJL	ND< 1.78	U	ND< 1.64	UJL	ND< 1.86	UJL	ND< 1.62	UJL	ND< 1.68	UJL	ND< 1.88	UJL	ND< 2.15	UJL	ND< 1.78	UJL	ND< 1.79	UJL	ND< 1.93	UJL		
Methylcyclohexane		1.66	J	ND< 1.82	UJL	ND< 1.78	U	ND< 1.64	UJL	ND< 1.86	UJL	ND< 1.62	UJL	ND< 1.68	UJL	ND< 1.88	UJL	ND< 2.15	UJL	ND< 1.78	UJL	ND< 1.79	UJL	ND< 1.93	UJL		
Methylene Chloride	100000	ND< 5.69	U	ND< 4.55	UJL	ND< 4.46	U	ND< 4.09	UJL	ND< 4.66	UJL	ND< 4.05	UJL	ND< 4.20	UJL	ND< 4.70	UJL	ND< 5.39	UJL	ND< 4.44	UJL	ND< 4.47	UJL	ND< 4.83	UJL		
M-P-Xylene		ND< 2.27	U	ND< 1.82	UJL	ND< 1.78	U	ND< 1.64	UJL	ND< 1.86	UJL	ND< 1.62	UJL	ND< 1.68	UJL	ND< 1.88	UJL	ND< 2.15	UJL	ND< 1.78	UJL	ND< 1.79	UJL	ND< 1.93	UJL		
Naphthalene	100000	ND< 5.69	U	ND< 4.55	UJL	ND< 4.46	U	ND< 4.09	UJL	ND< 4.66	UJL	ND< 4.05	UJL	ND< 4.20	UJL	ND< 4.70	UJL	ND< 5.39	UJL	ND< 4.44	UJL	ND< 4.47	UJL	ND< 4.83	UJL		
N-Butylbenzene	100000	ND< 2.27	U	ND< 1.82	UJL	ND< 1.78	U	ND< 1.64	UJL	ND< 1.86	UJL	ND< 1.62	UJL	ND< 1.68	UJL	ND< 1.88	UJL	ND< 2.15	UJL	ND< 1.78	UJL	ND< 1.79	UJL	ND< 1.93	UJL		
N-Propylbenzene	100000	ND< 2.27	U	ND< 1.82	UJL	ND< 1.78	U	ND< 1.64	UJL	ND< 1.86	UJL	ND< 1.62	UJL	ND< 1.68	UJL	ND< 1.88	UJL	ND< 2.15	UJL	ND< 1.78	UJL	ND< 1.79	UJL	ND< 1.93	UJL		
O-Xylene (1,2-Dimethylbenzene)		ND< 2.27	U	ND< 1.82	UJL	ND< 1.78	U	ND< 1.64	UJL	ND< 1.86	UJL	ND< 1.62	UJL	ND< 1.68	UJL	ND< 1.88	UJL	ND< 2.15	UJL	ND< 1.78	UJL	ND< 1.79	UJL	ND< 1.93	UJL		
Sec-Butylbenzene	100000	ND< 2.27	U	ND< 1.82	UJL	ND< 1.78	U	ND< 1.64	UJL	ND< 1.86	UJL	ND< 1.62	UJL	ND< 1.68	UJL	ND< 1.88	UJL	ND< 2.15	UJL	3.13	JL	ND< 1.79	UJL	ND< 1.93	UJL		
Styrene		ND< 5.69	U	ND< 4.55	UJL	ND< 4.46	U	ND< 4.09	UJL	ND< 4.66	UJL	ND< 4.05	UJL	ND< 4.20	UJL	ND< 4.70	UJL	ND< 5.39	UJL	ND< 4.44	UJL	ND< 4.47	UJL	ND< 4.83	UJL		
T-Butylbenzene	100000	ND< 2.27	U	ND< 1.82	UJL	ND< 1.78	U	ND< 1.64	UJL	ND< 1.86	UJL	ND< 1.62	UJL	ND< 1.68	UJL	ND< 1.88	UJL	ND< 2.15	UJL	ND< 1.78	UJL	ND< 1.79	UJL	ND< 1.93	UJL		
Tetrachloroethylene (PCE)	19000	ND< 2.27	U	ND< 1.82	UJL	ND< 1.78	U	ND< 1.64	UJL	ND< 1.86	UJL	ND< 1.62	UJL	ND< 1.68	UJL	ND< 1.88	UJL	ND< 2.15	UJL	ND< 1.78	UJL	ND< 1.79	UJL	ND< 1.93	UJL		
Toluene	100000	1.27	JM	ND< 1.82	UJL	ND< 1.78	U	ND< 1.64	UJL	ND< 1.86	UJL	ND< 1.62	UJL	ND< 1.68	UJL	ND< 1.88	UJL	ND< 2.15	UJL	ND< 1.78	UJL	ND< 1.79	UJL	ND< 1.93	UJL		
Trans-1,2-Dichloroethene	100000	ND< 2.27	U	ND< 1.82	UJL	ND< 1.78	U	ND< 1.64	UJL	ND< 1.86	UJL	ND< 1.62	UJL	ND< 1.68	UJL	ND< 1.88	UJL	ND< 2.15	UJL	ND< 1.78	UJL	ND< 1.79	UJL	ND< 1.93	UJL		
Trans-1,3-Dichloropropene		ND< 2.27	U	ND< 1.82	UJL	ND< 1.78	U	ND< 1.64	UJL	ND< 1.86	UJL	ND< 1.62	UJL	ND< 1.68	UJL	ND< 1.88	UJL	ND< 2.15	UJL	ND< 1.78	UJL	ND< 1.79	UJL	ND< 1.93	UJL		
Trichloroethylene (TCE)	21000	ND< 2.27	U	ND< 1.82	UJL	ND< 1.78	U	ND< 1.64	UJL	ND< 1.86	UJL	ND< 1.62	UJL	ND< 1.68	UJL	ND< 1.88	UJL	ND< 2.15	UJL	ND< 1.78	UJL	ND< 1.79	UJL	ND< 1.93	UJL		
Trichlorofluoromethane		ND< 2.27	U	ND< 1.82	UJL	ND< 1.78	U	ND< 1.64	UJL	ND< 1.86	UJL	ND< 1.62	UJL	ND< 1.68	UJL	ND< 1.88	UJL	ND< 2.15	UJL	ND< 1.78	UJL	ND< 1.79	UJL	ND< 1.93	UJL		
Vinyl Chloride	900	ND< 2.27	U	ND< 1.82	UJL	ND< 1.78	U	ND< 1.64	UJL	ND< 1.86	UJL	ND< 1.62	UJL	ND< 1.68	UJL	ND< 1.88	UJL	ND< 2.15	UJL	ND< 1.78	UJL	ND< 1.79	UJL	ND< 1.93	UJL		

NOTES:

1. Soil sample analytical results are compared to the New York State Department of Environmental Conservation (NYSDEC) Title 6 of the official compilation of New York Codes, Rules, and Regulations (NYCRR) Part 375 Restricted Residential Soil Cleanup Objectives (RRSCOs).
2. RRSCO exceedances are in bold and highlighted yellow.
3. ND = Not Detected
4. Results shown as "ND" with Reporting Limits exceeding RRSCOs are in bold.
5. VOCs = Volatile Organic Compounds
6. µg/kg = micrograms per kilogram.
7. Qualifier (Q) definitions are provided in the official lab reports.

TABLE 2A: Volatile Organic Compounds (VOCs) in Soil
AOC-2 - Auto Garage Area
Soil Sample Results (non-QA/QC)
Hudson River Psychiatric Center - North BCP Site, Poughkeepsie, NY
PVE Sheffler File #560909

	Date Sampled	5/6/2014		5/6/2014		5/6/2014		5/6/2014		5/6/2014		5/6/2014		5/6/2014		5/6/2014		5/6/2014		5/6/2014		5/6/2014		5/6/2014	
	Location	AG-8		AG-8		AG-8		AG-9		AG-9		AG-9		AG-10		AG-10		AG-10		AG-11		AG-11		AG-11	
	Sample ID	AG-8 0-2"		AG-8 1-2'		AG-8 3.75-5'		AG-9 0-2"		AG-9 1-2'		AG-9 5-6'		AG-10 0-2"		AG-10 1-2'		AG-10 9-12'		AG-11 0-2"		AG-11 1-2'		AG-11 6-8'	
Analyte	RRSCOs	Result	Q	Result	Q	Result	Q	Result	Q	Result	Q	Result	Q	Result	Q	Result	Q	Result	Q	Result	Q	Result	Q	Result	Q
VOCs (µg/kg)																									
1,1,1-Trichloroethane	100000	ND< 2.26	U	ND< 2.55	U	ND< 1.84	U	ND< 2.14	U	ND< 2.12	U	ND< 2.43	U	ND< 2.76	U	ND< 2.05	U	ND< 1.89	U	ND< 2.20	U	ND< 2.56	U	ND< 2.40	U
1,1,2,2-Tetrachloroethane		ND< 2.26	U	ND< 2.55	U	ND< 1.84	U	ND< 2.14	U	ND< 2.12	U	ND< 2.43	U	ND< 2.76	U	ND< 2.05	U	ND< 1.89	U	ND< 2.20	U	ND< 2.56	U	ND< 2.40	U
1,1,2-Trichloro-1,2,2-Trifluoroethane		ND< 2.26	U	ND< 2.55	U	ND< 1.84	U	ND< 2.14	U	ND< 2.12	U	ND< 2.43	U	ND< 2.76	U	ND< 2.05	U	ND< 1.89	U	ND< 2.20	U	ND< 2.56	U	ND< 2.40	U
1,1,2-Trichloroethane		ND< 2.26	U	ND< 2.55	U	ND< 1.84	U	ND< 2.14	U	ND< 2.12	U	ND< 2.43	U	ND< 2.76	U	ND< 2.05	U	ND< 1.89	U	ND< 2.20	U	ND< 2.56	U	ND< 2.40	U
1,1-Dichloroethane	26000	ND< 2.26	U	ND< 2.55	U	ND< 1.84	U	ND< 2.14	U	ND< 2.12	U	ND< 2.43	U	ND< 2.76	U	ND< 2.05	U	ND< 1.89	U	ND< 2.20	U	ND< 2.56	U	ND< 2.40	U
1,1-Dichloroethene	100000	ND< 2.26	U	ND< 2.55	U	ND< 1.84	U	ND< 2.14	U	ND< 2.12	U	ND< 2.43	U	ND< 2.76	U	ND< 2.05	U	ND< 1.89	U	ND< 2.20	U	ND< 2.56	U	ND< 2.40	U
1,2,3-Trichlorobenzene		ND< 5.64	U	ND< 6.38	U	ND< 4.61	U	ND< 5.36	U	ND< 5.31	U	ND< 6.07	U	ND< 6.90	U	ND< 5.12	U	ND< 4.73	U	ND< 5.50	U	ND< 6.41	U	ND< 6.01	U
1,2,4-Trichlorobenzene		ND< 5.64	U	ND< 6.38	U	ND< 4.61	U	ND< 5.36	U	ND< 5.31	U	ND< 6.07	U	ND< 6.90	U	ND< 5.12	U	ND< 4.73	U	ND< 5.50	U	ND< 6.41	U	ND< 6.01	U
1,2,4-Trimethylbenzene	52000	ND< 2.26	U	ND< 2.55	U	ND< 1.84	U	ND< 2.14	U	ND< 2.12	U	ND< 2.43	U	ND< 2.76	U	ND< 2.05	U	ND< 1.89	U	ND< 2.20	U	ND< 2.56	U	ND< 2.40	U
1,2-Dibromo-3-Chloropropane		ND< 11.3	U	ND< 12.8	U	ND< 9.22	U	ND< 10.7	U	ND< 10.6	U	ND< 12.1	U	ND< 13.8	U	ND< 10.2	U	ND< 9.45	U	ND< 11.0	U	ND< 12.8	U	ND< 12.0	U
1,2-Dibromoethane (Ethylene Dibromide)		ND< 2.26	U	ND< 2.55	U	ND< 1.84	U	ND< 2.14	U	ND< 2.12	U	ND< 2.43	U	ND< 2.76	U	ND< 2.05	U	ND< 1.89	U	ND< 2.20	U	ND< 2.56	U	ND< 2.40	U
1,2-Dichlorobenzene	100000	ND< 2.26	U	ND< 2.55	U	ND< 1.84	U	ND< 2.14	U	ND< 2.12	U	ND< 2.43	U	ND< 2.76	U	ND< 2.05	U	ND< 1.89	U	ND< 2.20	U	ND< 2.56	U	ND< 2.40	U
1,2-Dichloroethane	3100	ND< 2.26	U	ND< 2.55	U	ND< 1.84	U	ND< 2.14	U	ND< 2.12	U	ND< 2.43	U	ND< 2.76	U	ND< 2.05	U	ND< 1.89	U	ND< 2.20	U	ND< 2.56	U	ND< 2.40	U
1,2-Dichloropropane		ND< 2.26	U	ND< 2.55	U	ND< 1.84	U	ND< 2.14	U	ND< 2.12	U	ND< 2.43	U	ND< 2.76	U	ND< 2.05	U	ND< 1.89	U	ND< 2.20	U	ND< 2.56	U	ND< 2.40	U
1,3,5-Trimethylbenzene (Mesitylene)	52000	ND< 2.26	U	ND< 2.55	U	ND< 1.84	U	ND< 2.14	U	ND< 2.12	U	ND< 2.43	U	ND< 2.76	U	ND< 2.05	U	ND< 1.89	U	ND< 2.20	U	ND< 2.56	U	ND< 2.40	U
1,3-Dichlorobenzene	49000	ND< 2.26	U	ND< 2.55	U	ND< 1.84	U	ND< 2.14	U	ND< 2.12	U	ND< 2.43	U	ND< 2.76	U	ND< 2.05	U	ND< 1.89	U	ND< 2.20	U	ND< 2.56	U	ND< 2.40	U
1,4-Dichlorobenzene	13000	ND< 2.26	U	ND< 2.55	U	ND< 1.84	U	ND< 2.14	U	ND< 2.12	U	ND< 2.43	U	ND< 2.76	U	ND< 2.05	U	ND< 1.89	U	ND< 2.20	U	ND< 2.56	U	ND< 2.40	U
1,4-Dioxane (P-Dioxane)	13000	ND< 22.6	U	ND< 25.5	U	ND< 18.4	U	ND< 21.4	U	ND< 21.2	U	ND< 24.3	U	ND< 27.6	U	ND< 20.5	U	ND< 18.9	U	ND< 22.0	U	ND< 25.6	U	ND< 24.0	U
2-Hexanone		ND< 5.64	U	ND< 6.38	U	ND< 4.61	U	ND< 5.36	U	ND< 5.31	U	ND< 6.07	U	ND< 6.90	U	ND< 5.12	U	ND< 4.73	U	ND< 5.50	U	ND< 6.41	U	ND< 6.01	U
Acetone	100000	ND< 11.3	U	ND< 12.8	U	ND< 9.22	U	ND< 10.7	U	ND< 10.6	U	ND< 12.1	U	ND< 13.8	U	ND< 10.2	U	ND< 9.45	U	ND< 11.0	U	31.8		ND< 12.0	U
Benzene	4800	ND< 2.26	U	ND< 2.55	U	ND< 1.84	U	ND< 2.14	U	ND< 2.12	U	ND< 2.43	U	ND< 2.76	U	ND< 2.05	U	ND< 1.89	U	ND< 2.20	U	ND< 2.56	U	ND< 2.40	U
Bromochloromethane		ND< 5.64	U	ND< 6.38	U	ND< 4.61	U	ND< 5.36	U	ND< 5.31	U	ND< 6.07	U	ND< 6.90	U	ND< 5.12	U	ND< 4.73	U	ND< 5.50	U	ND< 6.41	U	ND< 6.01	U
Bromodichloromethane		ND< 2.26	U	ND< 2.55	U	ND< 1.84	U	ND< 2.14	U	ND< 2.12	U	ND< 2.43	U	ND< 2.76	U	ND< 2.05	U	ND< 1.89	U	ND< 2.20	U	ND< 2.56	U	ND< 2.40	U
Bromoform		ND< 5.64	U	ND< 6.38	U	ND< 4.61	U	ND< 5.36	U	ND< 5.31	U	ND< 6.07	U	ND< 6.90	U	ND< 5.12	U	ND< 4.73	U	ND< 5.50	U	ND< 6.41	U	ND< 6.01	U
Bromomethane		ND< 2.26	U	ND< 2.55	U	ND< 1.84	U	ND< 2.14	U	ND< 2.12	U	ND< 2.43	U	ND< 2.76	U	ND< 2.05	U	ND< 1.89	U	ND< 2.20	U	ND< 2.56	U	ND< 2.40	U
Carbon Disulfide		ND< 2.26	U	ND< 2.55	U	ND< 1.84	U	ND< 2.14	U	ND< 2.12	U	ND< 2.43	U	ND< 2.76	U	ND< 2.05	U	ND< 1.89	U	ND< 2.20	U	ND< 2.56	U	ND< 2.40	U
Carbon Tetrachloride	2400	ND< 2.26	U	ND< 2.55	U	ND< 1.84	U	ND< 2.14	U	ND< 2.12	U	ND< 2.43	U	ND< 2.76	U	ND< 2.05	U	ND< 1.89	U	ND< 2.20	U	ND< 2.56	U	ND< 2.40	U
Chlorobenzene	100000	ND< 2.26	U	ND< 2.55	U	ND< 1.84	U	ND< 2.14	U	ND< 2.12	U	ND< 2.43	U	ND< 2.76	U	ND< 2.05	U	ND< 1.89	U	ND< 2.20	U	ND< 2.56	U	ND< 2.40	U
Chloroethane		ND< 2.26	U	ND< 2.55	U	ND< 1.84	U	ND< 2.14	U	ND< 2.12	U	ND< 2.43	U	ND< 2.76	U	ND< 2.05	U	ND< 1.89	U	ND< 2.20	U	ND< 2.56	U	ND< 2.40	U
Chloroform	49000	ND< 2.26	U	ND< 2.55	U	ND< 1.84	U	ND< 2.14	U	ND< 2.12	U	ND< 2.43	U	ND< 2.76	U	ND< 2.05	U	ND< 1.89	U	ND< 2.20	U	ND< 2.56	U	ND< 2.40	U
Chloromethane		ND< 2.26	U	ND< 2.55	U	ND< 1.84	U	ND< 2.14	U	ND< 2.12	U	ND< 2.43	U	ND< 2.76	U	ND< 2.05	U	ND< 1.89	U	ND< 2.20	U	ND< 2.56	U	ND< 2.40	U
Cis-1,2-Dichloroethylene	100000	ND< 2.26	U	ND< 2.55	U	ND< 1.84	U	ND< 2.14	U	ND< 2.12	U	ND< 2.43	U	ND< 2.76	U	ND< 2.05	U	ND< 1.89	U	ND< 2.20	U	ND< 2.56	U	ND< 2.40	U
Cis-1,3-Dichloropropene		ND< 2.26	U	ND< 2.55	U	ND< 1.84	U	ND< 2.14	U	ND< 2.12	U	ND< 2.43	U	ND< 2.76	U	ND< 2.05	U	ND< 1.89	U	ND< 2.20	U	ND< 2.56	U	ND< 2.40	U
Cyclohexane		ND< 11.3	U	ND< 12.8	U	ND< 9.22	U	ND< 10.7	U	ND< 10.6	U	ND< 12.1	U	ND< 13.8	U	ND< 10.2	U	ND< 9.45	U	ND< 11.0	U	ND< 12.8	U	ND< 12.0	U
Cymene		ND< 2.26	U	ND< 2.55	U	ND< 1.84	U	ND< 2.14	U	ND< 2.12	U	ND< 2.43	U	ND< 2.76	U	ND< 2.05	U	ND< 1.89	U	ND< 2.20	U	ND< 2.56	U	ND< 2.40	U
Dibromochloromethane		ND< 2.26	U	ND< 2.55	U	ND< 1.84	U	ND< 2.14	U	ND< 2.12	U	ND< 2.43	U	ND< 2.76	U	ND< 2.05	U	ND< 1.89	U	ND< 2.20	U	ND< 2.56	U	ND< 2.40	U
Dichlorodifluoromethane		ND< 2.26	U	ND< 2.55	U	ND< 1.84	U	ND< 2.14	U	ND< 2.12	U	ND< 2.43	U	ND< 2.76	U	ND< 2.05	U	ND< 1.89	U	ND< 2.20	U	ND< 2.56	U	ND< 2.40	U
Ethylbenzene	41000	ND< 2.26	U	ND< 2.55	U	ND< 1.84	U	ND< 2.14	U	ND< 2.12	U	ND< 2.43	U	ND< 2.76	U	ND< 2.05	U	ND< 1.89	U	ND< 2.20	U	ND< 2.56	U	ND< 2.40	U
Isopropylbenzene (Cumene)		ND< 2.26	U	ND< 2.55	U	ND< 1.84	U	ND< 2.14	U	ND< 2.12	U	ND< 2.43	U	ND< 2.76	U	ND< 2.05	U	ND< 1.89	U	ND< 2.20	U	ND< 2.56	U	ND< 2.40	U
Methyl Acetate		2.46		ND< 2.55	U	ND< 1.84	U	ND< 2.14	U	ND< 2.12	U	ND< 2.43	U	ND< 2.76	U	ND< 2.05	U	ND< 1.89	U	ND< 2.20	U	ND< 2.56	U	ND< 2.40	U
Methyl Ethyl Ketone (2-Butanone)	100000	ND< 11.3	U	ND< 12.8	U	ND< 9.22	U	ND< 10.7	U	ND< 10.6	U	ND< 12.1	U	ND< 13.8	U	ND< 10.2	U	ND< 9.45	U	ND< 11.0	U	ND< 12.8	U	ND< 12.0	U
Methyl Isobutyl Ketone (4-Methyl-2-Pentanone)		ND< 5.64	U	ND< 6.38	U	ND< 4.61	U	ND< 5.36	U	ND< 5.31	U	ND< 6.07	U	ND< 6.90	U	ND< 5.12	U	ND< 4.73	U	ND< 5.50	U	ND< 6.41	U	ND< 6.01	U
Methyl Tert-Butyl Ether (MTBE)	100000	ND< 2.26	U	ND< 2.55	U	ND< 1.84	U	ND< 2.14	U	ND< 2.12	U	ND< 2.43	U	ND< 2.76	U	ND< 2.05	U	ND< 1.89	U	ND< 2.20	U	ND< 2.56	U	ND< 2.40	U
Methylcyclohexane		ND< 2.26	U	ND< 2.55	U	ND< 1.84	U	ND< 2.14	U	ND< 2.12	U	ND< 2.43	U	ND< 2.76	U	ND< 2.05	U	ND< 1.89	U	ND< 2.20	U	ND< 2.56	U	ND< 2.40	U
Methylene Chloride	100000	ND< 5.64	U	ND< 6.38	U	ND< 4.61	U	ND< 5.36	U	ND< 5.31	U	ND< 6.07	U	ND< 6.90	U	ND< 5.12	U	ND< 4.73	U	ND< 5.50	U	ND< 6.41	U	ND< 6.01	U
M-P-Xylene		ND< 2.26	U	ND< 2.55	U	ND< 1.84	U	ND< 2.14	U	ND< 2.12	U	ND< 2.43	U	ND< 2.76	U	ND< 2.05	U	ND< 1.89	U	ND< 2.20	U	ND< 2.56	U	ND< 2.40	U
Naphthalene	100000	ND< 5.64	U	ND< 6.38	U	ND< 4.61	U	ND< 5.36	U	ND< 5.31	U	ND< 6.07	U	ND< 6.90	U	ND< 5.12	U	ND< 4.73	U	ND< 5.50	U	ND< 6.41	U	ND< 6.01	U
N-Butylbenzene	100000	ND< 2.26	U	ND< 2.55	U	ND< 1.84	U	ND< 2.14	U	ND< 2.12	U	ND< 2.43	U	ND< 2.76	U	ND< 2.05	U	ND< 1.89	U	ND< 2.20	U	ND< 2.56	U	ND< 2.40	U
N-Propylbenzene	100000	ND< 2.26	U	ND< 2.55	U	ND< 1.84	U	ND< 2.14	U	ND< 2.12	U	ND< 2.43	U	ND< 2.76	U	ND< 2.05	U	ND< 1.89	U	ND< 2.20	U	ND< 2.56	U	ND< 2.40	U
O-Xylene (1,2-Dimethylbenzene)		ND< 2.26	U	ND< 2.55	U	ND< 1.84	U	ND< 2.14	U	ND< 2.12	U	ND< 2.43	U	ND< 2.76	U	ND< 2.05	U	ND< 1.89	U	ND< 2.20	U	ND< 2.56	U	ND< 2.40	U
Sec-Butylbenzene	100000	ND< 2.26	U	ND< 2.55	U	ND< 1.84	U	ND< 2.14	U	ND< 2.12	U	ND< 2.43	U	ND< 2.76	U	ND< 2.05	U	ND< 1.89	U	ND< 2.20	U	ND< 2.56	U	ND< 2.40	U
Styrene		ND< 5.64	U	ND< 6.38	U	ND< 4.61	U	ND< 5.36	U	ND< 5.31	U	ND< 6.07	U	ND< 6.90	U	ND< 5.12	U	ND< 4.73	U	ND< 5.50	U	ND< 6.41	U	ND< 6.01	U
T-Butylbenzene	100000	ND< 2.26	U	ND< 2.55	U	ND< 1.84	U	ND< 2.14	U	ND< 2.12	U	ND< 2.43	U	ND< 2.76	U	ND< 2.05	U	ND< 1.89	U	ND< 2.20	U	ND< 2.56	U	ND< 2.40	U
Tetrachloroethylene (PCE)	19000	ND< 2.26	U	ND< 2.55	U	ND< 1.84	U	ND< 2.14	U	ND< 2.12	U	ND< 2.43	U	ND< 2.76	U	ND< 2.05	U	ND< 1.89	U	ND< 2.20	U	ND< 2.56	U	ND< 2.40	U
Toluene	100000	ND< 2.26	U	ND< 2.55	U	ND< 1.84	U	ND< 2.14	U	ND< 2.12	U	ND< 2.43	U	ND< 2.76	U	ND< 2.05	U	ND< 1.89	U	ND< 2.20	U	ND< 2.56	U	ND< 2.40	U
Trans-1,2-Dichloroethene	100000	ND< 2.26	U	ND< 2.55	U	ND< 1.84	U	ND< 2.14	U	ND< 2.12	U	ND< 2.43	U	ND< 2.76	U	ND< 2.05	U	ND< 1.89	U	ND< 2.20	U	ND< 2.56	U	ND< 2.40	U
Trans-1,3-Dichloropropene		ND< 2.26	U	ND< 2.55	U	ND< 1.84	U	ND< 2.14	U	ND< 2.12	U	ND< 2.43	U	ND< 2.76	U	ND< 2.05	U	ND< 1.89	U	ND< 2.20	U	ND< 2.56	U	ND< 2.40	U
Trichloroethylene (TCE)	21000	ND< 2.26	U	ND< 2.55	U	ND< 1.84	U	ND< 2.14	U	ND< 2.12	U	ND< 2.43	U	ND< 2.76	U	ND< 2.05	U	ND< 1.89	U	ND< 2.20	U	ND< 2.56	U	ND< 2.40	U
Trichlorofluoromethane		5.15		6.39		2.39		ND< 2.14	U	14.5		6.71		61.5		1.22		ND< 1.89	U	ND< 2.20	U	ND< 2.56	U	ND< 2.40	U
Vinyl Chloride	900	ND< 2.26	U	ND< 2.55	U	ND< 1.84	U	ND< 2.14	U	ND< 2.12	U	ND< 2.43	U	ND< 2.76	U	ND< 2.05	U	ND< 1.89	U	ND< 2.20	U	ND< 2.56	U	ND< 2.40	U

NOTES:

1. Soil sample analytical results are compared to the New York State Department of Environmental Conservation (NYSDEC) Title 6 of the official compilation of New York Codes, Rules, and Regulations (NYCRR) Part 375 Restricted Residential Soil Cleanup Objectives (RRSCOs).
2. RRSCO exceedances are in bold and highlighted yellow.
3. ND = Not Detected
4. Results shown as "ND" with Reporting Limits exceeding RRSCOs are in bold.
5. VOCs = Volatile Organic Compounds
6. µg/kg = micrograms per kilogram.
7. Qualifier (Q) definitions are provided in the official lab reports.

TABLE 2A: Volatile Organic Compounds (VOCs) in Soil
AOC-2 - Auto Garage Area
Soil Sample Results (non-QA/QC)
Hudson River Psychiatric Center - North BCP Site, Poughkeepsie, NY
PVE Sheffler File #560909

	Date Sampled	5/6/2014		5/6/2014		5/6/2014		7/15/2014		7/15/2014		7/15/2014		7/15/2014		7/15/2014		7/15/2014		7/15/2014	
	Location	AG-12		AG-12		AG-12		AG-13		AG-13		AG-13		AG-SS-1		AG-SS-1		AG-SS-2		AG-SS-2	
	Sample ID	AG-12 0-2"		AG-12 1-2'		AG-12 7-9'		AG-13 0-2"		AG-13 1-2'		AG-13 7.5-9'		AG-SS-1 0-2"		AG-SS-1 1-2'		AG-SS-2 0-2"		AG-SS-2 1-2'	
Analyte	RRSCOs	Result	Q	Result	Q	Result	Q	Result	Q	Result	Q	Result	Q	Result	Q	Result	Q	Result	Q	Result	Q
VOCs (µg/kg)																					
1,1,1-Trichloroethane	100000	ND< 3.66	U	ND< 2.74	U	ND< 1.85	U	ND< 3.35	U	ND< 1.63	U	ND< 1.76	U	ND< 2.36	U	ND< 1.88	U	ND< 2.73	U	ND< 2.64	U
1,1,2,2-Tetrachloroethane		ND< 3.66	U	ND< 2.74	U	ND< 1.85	U	ND< 3.35	U	ND< 1.63	U	ND< 1.76	U	ND< 2.36	U	ND< 1.88	U	ND< 2.73	U	ND< 2.64	U
1,1,2-Trichloro-1,2,2-Trifluoroethane		ND< 3.66	U	ND< 2.74	U	ND< 1.85	U	ND< 3.35	U	ND< 1.63	U	ND< 1.76	U	ND< 2.36	U	ND< 1.88	U	ND< 2.73	U	ND< 2.64	U
1,1,2-Trichloroethane		ND< 3.66	U	ND< 2.74	U	ND< 1.85	U	ND< 3.35	U	ND< 1.63	U	ND< 1.76	U	ND< 2.36	U	ND< 1.88	U	ND< 2.73	U	ND< 2.64	U
1,1-Dichloroethane	26000	ND< 3.66	U	ND< 2.74	U	ND< 1.85	U	ND< 3.35	U	ND< 1.63	U	ND< 1.76	U	ND< 2.36	U	ND< 1.88	U	ND< 2.73	U	ND< 2.64	U
1,1-Dichloroethene	100000	ND< 3.66	U	ND< 2.74	U	ND< 1.85	U	ND< 3.35	U	ND< 1.63	U	ND< 1.76	U	ND< 2.36	U	ND< 1.88	U	ND< 2.73	U	ND< 2.64	U
1,2,3-Trichlorobenzene		ND< 9.15	U	ND< 6.85	U	ND< 4.63	U	ND< 8.39	U	ND< 4.08	U	ND< 4.41	U	ND< 5.89	U	ND< 4.69	U	ND< 6.83	U	ND< 6.59	U
1,2,4-Trichlorobenzene		ND< 9.15	U	ND< 6.85	U	ND< 4.63	U	ND< 8.39	U	ND< 4.08	U	ND< 4.41	U	ND< 5.89	U	ND< 4.69	U	ND< 6.83	U	ND< 6.59	U
1,2,4-Trimethylbenzene	52000	ND< 3.66	U	ND< 2.74	U	ND< 1.85	U	ND< 3.35	U	ND< 1.63	U	ND< 1.76	U	ND< 2.36	U	ND< 1.88	U	ND< 2.73	U	ND< 2.64	U
1,2-Dibromo-3-Chloropropane		ND< 18.3	U	ND< 13.7	U	ND< 9.26	U	ND< 16.8	U	ND< 8.16	U	ND< 8.81	U	ND< 11.8	U	ND< 9.38	U	ND< 13.7	U	ND< 13.2	U
1,2-Dibromoethane (Ethylene Dibromide)		ND< 3.66	U	ND< 2.74	U	ND< 1.85	U	ND< 3.35	U	ND< 1.63	U	ND< 1.76	U	ND< 2.36	U	ND< 1.88	U	ND< 2.73	U	ND< 2.64	U
1,2-Dichlorobenzene	100000	ND< 3.66	U	ND< 2.74	U	ND< 1.85	U	ND< 3.35	U	ND< 1.63	U	ND< 1.76	U	ND< 2.36	U	ND< 1.88	U	ND< 2.73	U	ND< 2.64	U
1,2-Dichloroethane	3100	ND< 3.66	U	ND< 2.74	U	ND< 1.85	U	ND< 3.35	U	ND< 1.63	U	ND< 1.76	U	ND< 2.36	U	ND< 1.88	U	ND< 2.73	U	ND< 2.64	U
1,2-Dichloropropane		ND< 3.66	U	ND< 2.74	U	ND< 1.85	U	ND< 3.35	U	ND< 1.63	U	ND< 1.76	U	ND< 2.36	U	ND< 1.88	U	ND< 2.73	U	ND< 2.64	U
1,3,5-Trimethylbenzene (Mesitylene)	52000	ND< 3.66	U	ND< 2.74	U	ND< 1.85	U	ND< 3.35	U	ND< 1.63	U	ND< 1.76	U	ND< 2.36	U	ND< 1.88	U	ND< 2.73	U	ND< 2.64	U
1,3-Dichlorobenzene	49000	ND< 3.66	U	ND< 2.74	U	ND< 1.85	U	ND< 3.35	U	ND< 1.63	U	ND< 1.76	U	ND< 2.36	U	ND< 1.88	U	ND< 2.73	U	ND< 2.64	U
1,4-Dichlorobenzene	13000	ND< 3.66	U	ND< 2.74	U	ND< 1.85	U	ND< 3.35	U	ND< 1.63	U	ND< 1.76	U	ND< 2.36	U	ND< 1.88	U	ND< 2.73	U	ND< 2.64	U
1,4-Dioxane (P-Dioxane)	13000	ND< 36.6	U	ND< 27.4	U	ND< 18.5	U	ND< 33.5	U	ND< 16.3	U	ND< 17.6	U	ND< 23.6	U	ND< 18.8	U	ND< 27.3	U	ND< 26.4	U
2-Hexanone		ND< 9.15	U	ND< 6.85	U	ND< 4.63	U	ND< 8.39	U	ND< 4.08	U	ND< 4.41	U	ND< 5.89	U	ND< 4.69	U	ND< 6.83	U	ND< 6.59	U
Acetone	100000	ND< 18.3	U	ND< 13.7	U	ND< 9.26	U	14.7	J	6.96	J	ND< 8.81	U	ND< 11.8	U	14.6		22.8		52.3	
Benzene	4800	ND< 3.66	U	ND< 2.74	U	ND< 1.85	U	ND< 3.35	U	ND< 1.63	U	ND< 1.76	U	ND< 2.36	U	ND< 1.88	U	ND< 2.73	U	ND< 2.64	U
Bromochloromethane		ND< 9.15	U	ND< 6.85	U	ND< 4.63	U	ND< 8.39	U	ND< 4.08	U	ND< 4.41	U	ND< 5.89	U	ND< 4.69	U	ND< 6.83	U	ND< 6.59	U
Bromodichloromethane		ND< 3.66	U	ND< 2.74	U	ND< 1.85	U	ND< 3.35	U	ND< 1.63	U	ND< 1.76	U	ND< 2.36	U	ND< 1.88	U	ND< 2.73	U	ND< 2.64	U
Bromoform		ND< 9.15	U	ND< 6.85	U	ND< 4.63	U	ND< 8.39	U	ND< 4.08	U	ND< 4.41	U	ND< 5.89	U	ND< 4.69	U	ND< 6.83	U	ND< 6.59	U
Bromomethane		ND< 3.66	U	ND< 2.74	U	ND< 1.85	U	ND< 3.35	U	ND< 1.63	U	ND< 1.76	U	ND< 2.36	U	ND< 1.88	U	ND< 2.73	U	ND< 2.64	U
Carbon Disulfide		ND< 3.66	U	ND< 2.74	U	ND< 1.85	U	ND< 3.35	U	ND< 1.63	U	ND< 1.76	U	ND< 2.36	U	ND< 1.88	U	1.50	J	ND< 2.64	U
Carbon Tetrachloride	2400	ND< 3.66	U	ND< 2.74	U	ND< 1.85	U	ND< 3.35	U	ND< 1.63	U	ND< 1.76	U	ND< 2.36	U	ND< 1.88	U	ND< 2.73	U	ND< 2.64	U
Chlorobenzene	100000	ND< 3.66	U	ND< 2.74	U	ND< 1.85	U	ND< 3.35	U	ND< 1.63	U	ND< 1.76	U	ND< 2.36	U	ND< 1.88	U	ND< 2.73	U	ND< 2.64	U
Chloroethane		ND< 3.66	U	ND< 2.74	U	ND< 1.85	U	ND< 3.35	U	ND< 1.63	U	ND< 1.76	U	ND< 2.36	U	ND< 1.88	U	ND< 2.73	U	ND< 2.64	U
Chloroform	49000	ND< 3.66	U	ND< 2.74	U	ND< 1.85	U	ND< 3.35	U	ND< 1.63	U	ND< 1.76	U	ND< 2.36	U	ND< 1.88	U	ND< 2.73	U	ND< 2.64	U
Chloromethane		ND< 3.66	U	ND< 2.74	U	ND< 1.85	U	ND< 3.35	U	ND< 1.63	U	ND< 1.76	U	ND< 2.36	U	ND< 1.88	U	ND< 2.73	U	ND< 2.64	U
Cis-1,2-Dichloroethylene	100000	ND< 3.66	U	ND< 2.74	U	ND< 1.85	U	ND< 3.35	U	ND< 1.63	U	ND< 1.76	U	ND< 2.36	U	ND< 1.88	U	ND< 2.73	U	ND< 2.64	U
Cis-1,3-Dichloropropene		ND< 3.66	U	ND< 2.74	U	ND< 1.85	U	ND< 3.35	U	ND< 1.63	U	ND< 1.76	U	ND< 2.36	U	ND< 1.88	U	ND< 2.73	U	ND< 2.64	U
Cyclohexane		ND< 18.3	U	ND< 13.7	U	ND< 9.26	U	ND< 16.8	U	ND< 8.16	U	ND< 8.81	U	ND< 11.8	U	ND< 9.38	U	ND< 13.7	U	ND< 13.2	U
Cymene		ND< 3.66	U	ND< 2.74	U	ND< 1.85	U	ND< 3.35	U	ND< 1.63	U	ND< 1.76	U	ND< 2.36	U	ND< 1.88	U	ND< 2.73	U	ND< 2.64	U
Dibromochloromethane		ND< 3.66	U	ND< 2.74	U	ND< 1.85	U	ND< 3.35	U	ND< 1.63	U	ND< 1.76	U	ND< 2.36	U	ND< 1.88	U	ND< 2.73	U	ND< 2.64	U
Dichlorodifluoromethane		ND< 3.66	U	ND< 2.74	U	ND< 1.85	U	ND< 3.35	U	ND< 1.63	U	ND< 1.76	U	ND< 2.36	U	ND< 1.88	U	ND< 2.73	U	ND< 2.64	U
Ethylbenzene	41000	ND< 3.66	U	ND< 2.74	U	ND< 1.85	U	ND< 3.35	U	ND< 1.63	U	ND< 1.76	U	ND< 2.36	U	ND< 1.88	U	ND< 2.73	U	ND< 2.64	U
Isopropylbenzene (Cumene)		ND< 3.66	U	ND< 2.74	U	ND< 1.85	U	ND< 3.35	U	ND< 1.63	U	ND< 1.76	U	ND< 2.36	U	ND< 1.88	U	ND< 2.73	U	ND< 2.64	U
Methyl Acetate		ND< 3.66	U	ND< 2.74	U	ND< 1.85	U	ND< 3.35	U	ND< 1.63	U	ND< 1.76	U	ND< 2.36	U	ND< 1.88	U	ND< 2.73	U	113	
Methyl Ethyl Ketone (2-Butanone)	100000	ND< 18.3	U	ND< 13.7	U	ND< 9.26	U	ND< 16.8	U	ND< 8.16	U	ND< 8.81	U	ND< 11.8	U	ND< 9.38	U	8.02	J	12.1	J
Methyl Isobutyl Ketone (4-Methyl-2-Pentanone)		ND< 9.15	U	ND< 6.85	U	ND< 4.63	U	ND< 8.39	U	ND< 4.08	U	ND< 4.41	U	ND< 5.89	U	ND< 4.69	U	ND< 6.83	U	ND< 6.59	U
Methyl Tert-Butyl Ether (MTBE)	100000	ND< 3.66	U	ND< 2.74	U	ND< 1.85	U	ND< 3.35	U	ND< 1.63	U	ND< 1.76	U	ND< 2.36	U	ND< 1.88	U	ND< 2.73	U	ND< 2.64	U
Methylcyclohexane		ND< 3.66	U	ND< 2.74	U	ND< 1.85	U	ND< 3.35	U	ND< 1.63	U	ND< 1.76	U	ND< 2.36	U	ND< 1.88	U	1.78	J	ND< 2.64	U
Methylene Chloride	100000	ND< 9.15	U	ND< 6.85	U	ND< 4.63	U	ND< 8.39	U	ND< 4.08	U	ND< 4.41	U	ND< 5.89	U	ND< 4.69	U	ND< 6.83	U	ND< 6.59	U
M-P-Xylene		ND< 3.66	U	ND< 2.74	U	ND< 1.85	U	ND< 3.35	U	ND< 1.63	U	ND< 1.76	U	ND< 2.36	U	ND< 1.88	U	ND< 2.73	U	ND< 2.64	U
Naphthalene	100000	ND< 9.15	U	ND< 6.85	U	ND< 4.63	U	ND< 8.39	U	ND< 4.08	U	ND< 4.41	U	ND< 5.89	U	ND< 4.69	U	ND< 6.83	U	ND< 6.59	U
N-Butylbenzene	100000	ND< 3.66	U	ND< 2.74	U	ND< 1.85	U	ND< 3.35	U	ND< 1.63	U	ND< 1.76	U	ND< 2.36	U	ND< 1.88	U	ND< 2.73	U	ND< 2.64	U
N-Propylbenzene	100000	ND< 3.66	U	ND< 2.74	U	ND< 1.85	U	ND< 3.35	U	ND< 1.63	U	ND< 1.76	U	ND< 2.36	U	ND< 1.88	U	ND< 2.73	U	ND< 2.64	U
O-Xylene (1,2-Dimethylbenzene)		ND< 3.66	U	ND< 2.74	U	ND< 1.85	U	ND< 3.35	U	ND< 1.63	U	ND< 1.76	U	ND< 2.36	U	ND< 1.88	U	ND< 2.73	U	ND< 2.64	U
Sec-Butylbenzene	100000	ND< 3.66	U	ND< 2.74	U	ND< 1.85	U	ND< 3.35	U	ND< 1.63	U	ND< 1.76	U	ND< 2.36	U	ND< 1.88	U	ND< 2.73	U	ND< 2.64	U
Styrene		ND< 9.15	U	ND< 6.85	U	ND< 4.63	U	ND< 8.39	U	ND< 4.08	U	ND< 4.41	U	ND< 5.89	U	ND< 4.69	U	ND< 6.83	U	ND< 6.59	U
T-Butylbenzene	100000	ND< 3.66	U	ND< 2.74	U	ND< 1.85	U	ND< 3.35	U	ND< 1.63	U	ND< 1.76	U	ND< 2.36	U	ND< 1.88	U	ND< 2.73	U	ND< 2.64	U
Tetrachloroethylene (PCE)	19000	ND< 3.66	U	ND< 2.74	U	ND< 1.85	U	2.30	J	ND< 1.63	U	ND< 1.76	U	ND< 2.36	U	ND< 1.88	U	ND< 2.73	U	ND< 2.64	U
Toluene	100000	ND< 3.66	U	ND< 2.74	U	ND< 1.85	U	ND< 3.35	U	ND< 1.63	U	ND< 1.76	U	ND< 2.36	U	ND< 1.88	U	ND< 2.73	U	ND< 2.64	U
Trans-1,2-Dichloroethene	100000	ND< 3.66	U	ND< 2.74	U	ND< 1.85	U	ND< 3.35	U	ND< 1.63	U	ND< 1.76	U	ND< 2.36	U	ND< 1.88	U	ND< 2.73	U	ND< 2.64	U
Trans-1,3-Dichloropropene		ND< 3.66	U	ND< 2.74	U	ND< 1.85	U	ND< 3.35	U	ND< 1.63	U	ND< 1.76	U	ND< 2.36	U	ND< 1.88	U	ND< 2.73	U	ND< 2.64	U
Trichloroethylene (TCE)	21000	ND< 3.66	U	ND< 2.74	U	ND< 1.85	U	ND< 3.35	U	ND< 1.63	U	ND< 1.76	U	ND< 2.36	U	ND< 1.88	U	ND< 2.73	U	ND< 2.64	U
Trichlorofluoromethane		20.9		6.04		3.26		ND< 3.35	U	ND< 1.63	U	ND< 1.76	U	ND< 2.36	U	ND< 1.88	U	ND< 2.73	U	ND< 2.64	U
Vinyl Chloride	900	ND< 3.66	U	ND< 2.74	U	ND< 1.85	U	ND< 3.35	U	ND< 1.63	U	ND< 1.76	U	ND< 2.36	U	ND< 1.88	U	ND< 2.73	U	ND< 2.64	U

NOTES:

1. Soil sample analytical results are compared to the New York State Department of Environmental Conservation (NYSDEC) Title 6 of the official compilation of New York Codes, Rules, and Regulations (NYCRR) Part 375 Restricted Residential Soil Cleanup Objectives (RRSCOs).
2. RRSCO exceedances are in bold and highlighted yellow.
3. ND = Not Detected
4. Results shown as "ND" with Reporting Limits exceeding RRSCOs are in bold.
5. VOCs = Volatile Organic Compounds
6. µg/kg = micrograms per kilogram.
7. Qualifier (Q) definitions are provided in the official lab reports.

Table 2B – SVOCs in Soil – AOC-2

TABLE 2B: Semi-Volatile Organic Compounds (SVOCs) in Soil
AOC-2 - Auto Garage Area
Soil Sample Results (non-QA/QC)
Hudson River Psychiatric Center - North BCP Site, Poughkeepsie, NY
PVE Sheffler File #560909

	Date Sampled	5/5/2014		5/5/2014		5/5/2014		5/5/2014		5/5/2014		5/5/2014		5/5/2014		5/5/2014		5/5/2014		5/5/2014		5/5/2014		5/5/2014		5/6/2014		5/6/2014	
	Location	AG-1		AG-1		AG-2		AG-2		AG-3		AG-3		AG-4		AG-4		AG-5		AG-5		AG-6		AG-6		AG-8		AG-8	
	Sample ID	AG-1 2.25-4'		AG-1 8.5-10'		AG-2 1-3'		AG-2 8-9'		AG-3 1-2.5'		AG-3 15-17'		AG-4 4.25-5'		AG-4 7.5-9'		AG-5 3-4'		AG-5 8-9'		AG-6 2-4'		AG-6 8-10'		AG-8 0-2"		AG-8 1-2'	
Analyte	RRSCOs	Result	Q	Result	Q	Result	Q	Result	Q	Result	Q	Result	Q	Result	Q	Result	Q	Result	Q	Result	Q	Result	Q	Result	Q	Result	Q	Result	Q
SVOCs (µg/kg)																													
1,2,4,5-Tetrachlorobenzene		ND< 343	U	ND< 341	U	ND< 357	U	ND< 347	U	ND< 353	U	ND< 360	U	ND< 365	U	ND< 320	U	ND< 320	U	ND< 371	U	ND< 337	U	ND< 330	U	ND< 336	U	ND< 312	U
1,2,4-Trichlorobenzene		ND< 343	U	ND< 341	U	ND< 357	U	ND< 347	U	ND< 353	U	ND< 360	U	ND< 365	U	ND< 320	U	ND< 320	U	ND< 371	U	ND< 337	U	ND< 330	U	ND< 336	U	ND< 312	U
1,2-Dichlorobenzene	100000	ND< 343	U	ND< 341	U	ND< 357	U	ND< 347	U	ND< 353	U	ND< 360	U	ND< 365	U	ND< 320	U	ND< 320	U	ND< 371	U	ND< 337	U	ND< 330	U	ND< 336	U	ND< 312	U
1,3-Dichlorobenzene	49000	ND< 343	U	ND< 341	U	ND< 357	U	ND< 347	U	ND< 353	U	ND< 360	U	ND< 365	U	ND< 320	U	ND< 320	U	ND< 371	U	ND< 337	U	ND< 330	U	ND< 336	U	ND< 312	U
1,4-Dichlorobenzene	13000	ND< 343	U	ND< 341	U	ND< 357	U	ND< 347	U	ND< 353	U	ND< 360	U	ND< 365	U	ND< 320	U	ND< 320	U	ND< 371	U	ND< 337	U	ND< 330	U	ND< 336	U	ND< 312	U
2,2-Oxybis(2-Chloropropane)		ND< 343	U	ND< 341	U	ND< 357	U	ND< 347	U	ND< 353	U	ND< 360	U	ND< 365	U	ND< 320	U	ND< 320	U	ND< 371	U	ND< 337	U	ND< 330	U	ND< 336	U	ND< 312	U
2,3,4,6-Tetrachlorophenol		ND< 343	U	ND< 341	U	ND< 357	U	ND< 347	U	ND< 353	U	ND< 360	U	ND< 365	U	ND< 320	U	ND< 320	U	ND< 371	U	ND< 337	U	ND< 330	U	ND< 336	U	ND< 312	U
2,4,5-Trichlorophenol		ND< 687	U	ND< 683	U	ND< 714	U	ND< 695	U	ND< 707	U	ND< 720	U	ND< 729	U	ND< 639	U	ND< 641	U	ND< 743	U	ND< 674	U	ND< 660	U	ND< 672	U	ND< 625	U
2,4,6-Trichlorophenol		ND< 343	U	ND< 341	U	ND< 357	U	ND< 347	U	ND< 353	U	ND< 360	U	ND< 365	U	ND< 320	U	ND< 320	U	ND< 371	U	ND< 337	U	ND< 330	U	ND< 336	U	ND< 312	U
2,4-Dichlorophenol		ND< 343	U	ND< 341	U	ND< 357	U	ND< 347	U	ND< 353	U	ND< 360	U	ND< 365	U	ND< 320	U	ND< 320	U	ND< 371	U	ND< 337	U	ND< 330	U	ND< 336	U	ND< 312	U
2,4-Dimethylphenol		ND< 343	U	ND< 341	U	ND< 357	U	ND< 347	U	ND< 353	U	ND< 360	U	ND< 365	U	ND< 320	U	ND< 320	U	ND< 371	U	ND< 337	U	ND< 330	U	ND< 336	U	ND< 312	U
2,4-Dinitrophenol		ND< 687	U	ND< 683	U	ND< 714	U	ND< 695	U	ND< 707	U	ND< 720	U	ND< 729	U	ND< 639	U	ND< 641	U	ND< 743	U	ND< 674	U	ND< 660	U	ND< 672	U	ND< 625	U
2,4-Dinitrotoluene		ND< 343	U	ND< 341	U	ND< 357	U	ND< 347	U	ND< 353	U	ND< 360	U	ND< 365	U	ND< 320	U	ND< 320	U	ND< 371	U	ND< 337	U	ND< 330	U	ND< 336	U	ND< 312	U
2,6-Dinitrotoluene		ND< 343	U	ND< 341	U	ND< 357	U	ND< 347	U	ND< 353	U	ND< 360	U	ND< 365	U	ND< 320	U	ND< 320	U	ND< 371	U	ND< 337	U	ND< 330	U	ND< 336	U	ND< 312	U
2-Chloronaphthalene		ND< 343	U	ND< 341	U	ND< 357	U	ND< 347	U	ND< 353	U	ND< 360	U	ND< 365	U	ND< 320	U	ND< 320	U	ND< 371	U	ND< 337	U	ND< 330	U	ND< 336	U	ND< 312	U
2-Chlorophenol		ND< 343	U	ND< 341	U	ND< 357	U	ND< 347	U	ND< 353	U	ND< 360	U	ND< 365	U	ND< 320	U	ND< 320	U	ND< 371	U	ND< 337	U	ND< 330	U	ND< 336	U	ND< 312	U
2-Methylnaphthalene		ND< 343	U	ND< 341	U	ND< 357	U	ND< 347	U	ND< 353	U	ND< 360	U	ND< 365	U	ND< 320	U	ND< 320	U	ND< 371	U	ND< 337	U	ND< 330	U	ND< 336	U	ND< 312	U
2-Methylphenol (O-Cresol)	100000	ND< 343	U	ND< 341	U	ND< 357	U	ND< 347	U	ND< 353	U	ND< 360	U	ND< 365	U	ND< 320	U	ND< 320	U	ND< 371	U	ND< 337	U	ND< 330	U	ND< 336	U	ND< 312	U
2-Nitroaniline		ND< 687	U	ND< 683	U	ND< 714	U	ND< 695	U	ND< 707	U	ND< 720	U	ND< 729	U	ND< 639	U	ND< 641	U	ND< 743	U	ND< 674	U	ND< 660	U	ND< 672	U	ND< 625	U
2-Nitrophenol		ND< 343	U	ND< 341	U	ND< 357	U	ND< 347	U	ND< 353	U	ND< 360	U	ND< 365	U	ND< 320	U	ND< 320	U	ND< 371	U	ND< 337	U	ND< 330	U	ND< 336	U	ND< 312	U
3,3'-Dichlorobenzidine		ND< 343	U	ND< 341	U	ND< 357	U	ND< 347	U	ND< 353	U	ND< 360	U	ND< 365	U	ND< 320	U	ND< 320	U	ND< 371	U	ND< 337	U	ND< 330	U	ND< 336	U	ND< 312	U
3-Methylphenol	100000	ND< 343	U	ND< 341	U	ND< 357	U	ND< 347	U	ND< 353	U	ND< 360	U	ND< 365	U	ND< 320	U	ND< 320	U	ND< 371	U	ND< 337	U	ND< 330	U	ND< 336	U	ND< 312	U
3-Nitroaniline		ND< 687	U	ND< 683	U	ND< 714	U	ND< 695	U	ND< 707	U	ND< 720	U	ND< 729	U	ND< 639	U	ND< 641	U	ND< 743	U	ND< 674	U	ND< 660	U	ND< 672	U	ND< 625	U
4,6-Dinitro-2-Methylphenol		ND< 687	U	ND< 683	U	ND< 714	U	ND< 695	U	ND< 707	U	ND< 720	U	ND< 729	U	ND< 639	U	ND< 641	U	ND< 743	U	ND< 674	U	ND< 660	U	ND< 672	U	ND< 625	U
4-Bromophenyl Phenyl Ether		ND< 343	U	ND< 341	U	ND< 357	U	ND< 347	U	ND< 353	U	ND< 360	U	ND< 365	U	ND< 320	U	ND< 320	U	ND< 371	U	ND< 337	U	ND< 330	U	ND< 336	U	ND< 312	U
4-Chloro-3-Methylphenol		ND< 343	U	ND< 341	U	ND< 357	U	ND< 347	U	ND< 353	U	ND< 360	U	ND< 365	U	ND< 320	U	ND< 320	U	ND< 371	U	ND< 337	U	ND< 330	U	ND< 336	U	ND< 312	U
4-Chloroaniline		ND< 343	U	ND< 341	U	ND< 357	U	ND< 347	U	ND< 353	U	ND< 360	U	ND< 365	U	ND< 320	U	ND< 320	U	ND< 371	U	ND< 337	U	ND< 330	U	ND< 336	U	ND< 312	U
4-Chlorophenyl Phenyl Ether		ND< 343	U	ND< 341	U	ND< 357	U	ND< 347	U	ND< 353	U	ND< 360	U	ND< 365	U	ND< 320	U	ND< 320	U	ND< 371	U	ND< 337	U	ND< 330	U	ND< 336	U	ND< 312	U
4-Nitroaniline		ND< 687	U	ND< 683	U	ND< 714	U	ND< 695	U	ND< 707	U	ND< 720	U	ND< 729	U	ND< 639	U	ND< 641	U	ND< 743	U	ND< 674	U	ND< 660	U	ND< 672	U	ND< 625	U
4-Nitrophenol		ND< 687	U	ND< 683	U	ND< 714	U	ND< 695	U	ND< 707	U	ND< 720	U	ND< 729	U	ND< 639	U	ND< 641	U	ND< 743	U	ND< 674	U	ND< 660	U	ND< 672	U	ND< 625	U
Acenaphthene	100000	ND< 343	U	ND< 341	U	ND< 357	U	ND< 347	U	ND< 353	U	ND< 360	U	ND< 365	U	ND< 320	U	ND< 320	U	ND< 371	U	ND< 337	U	ND< 330	U	ND< 336	U	ND< 312	U
Acenaphthylene	100000	ND< 343	U	ND< 341	U	ND< 357	U	ND< 347	U	ND< 353	U	365		ND< 365	U	ND< 320	U	ND< 320	U	ND< 371	U	ND< 337	U	ND< 330	U	ND< 336	U	ND< 312	U
Acetophenone		ND< 343	U	ND< 341	U	ND< 357	U	ND< 347	U	ND< 353	U	ND< 360	U	ND< 365	U	ND< 320	U	ND< 320	U	ND< 371	U	ND< 337	U	ND< 330	U	ND< 336	U	ND< 312	U
Anthracene	100000	ND< 343	U	ND< 341	U	ND< 357	U	ND< 347	U	ND< 353	U	695		ND< 365	U	ND< 320	U	ND< 320	U	ND< 371	U	ND< 337	U	ND< 330	U	ND< 336	U	ND< 312	U
Atrazine		ND< 343	U	ND< 341	U	ND< 357	U	ND< 347	U	ND< 353	U	ND< 360	U	ND< 365	U	ND< 320	U	ND< 320	U	ND< 371	U	ND< 337	U	ND< 330	U	ND< 336	U	ND< 312	U
Benzaldehyde		ND< 343	U	ND< 341	U	ND< 357	U	ND< 347	U	ND< 353	U	ND< 360	U	ND< 365	U	ND< 320	U	ND< 320	U	ND< 371	U	ND< 337	U	ND< 330	U	ND< 336	U	ND< 312	U
Benzo(A)Anthracene	1000	ND< 343	U	ND< 341	U	ND< 357	U	ND< 347	U	ND< 353	U	427		ND< 365	U	ND< 320	U	ND< 320	U	ND< 371	U	ND< 337	U	ND< 330	U	ND< 336	U	ND< 312	U
Benzo(A)Pyrene	1000	ND< 343	U	ND< 341	U	ND< 357	U	ND< 347	U	ND< 353	U	533		ND< 365	U	ND< 320	U	ND< 320	U	ND< 371	U	ND< 337	U	ND< 330	U	ND< 336	U	ND< 312	U
Benzo(B)Fluoranthene	1000	ND< 343	U	ND< 341	U	ND< 357	U	ND< 347	U	ND< 353	U	501		ND< 365	U	ND< 320	U	ND< 320	U	ND< 371	U	ND< 337	U	ND< 330	U	ND< 336	U	ND< 312	U
Benzo(G,H,I)Perylene	100000	ND< 343	U	ND< 341	U	ND< 357	U	ND< 347	U	ND< 353	U	408		ND< 365	U	ND< 320	U	ND< 320	U	ND< 371	U	ND< 337	U	ND< 330	U	ND< 336	U	ND< 312	U
Benzo(K)Fluoranthene	3900	ND< 343	U	ND< 341	U	ND< 357	U	ND< 347	U	ND< 353	U	ND< 360	U	ND< 365	U	ND< 320	U	ND< 320	U	ND< 371	U	ND< 337	U	ND< 330	U	ND< 336	U	ND< 312	U
Benzyl Butyl Phthalate		ND< 343	U	ND< 341	U	ND< 357	U	ND< 347	U	ND< 353	U	ND< 360	U	ND< 365	U	ND< 320	U	ND< 320	U	ND< 371	U	ND< 337	U	ND< 330	U	ND< 336	U	ND< 312	U
Biphenyl (Diphenyl)		ND< 343	U	ND< 341	U	ND< 357	U	ND< 347	U	ND< 353	U	ND< 360	U	ND< 365	U	ND< 320	U	ND< 320	U	ND< 371	U	ND< 337	U	ND< 330	U	ND< 336	U	ND< 312	U
Bis(2-Chloroethoxy) Methane		ND< 343	U	ND< 341	U	ND< 357	U	ND< 347	U	ND< 353	U	ND< 360	U	ND< 365	U	ND< 320	U	ND< 320	U	ND< 371	U	ND< 337	U	ND< 330	U	ND< 336	U	ND< 312	U
Bis(2-Chloroethyl) Ether (2-Chloroethyl Ether)		ND< 343	U	ND< 341	U	ND< 357	U	ND< 347	U	ND< 353	U	ND< 360	U	ND< 365	U	ND< 320	U	ND< 320	U	ND< 371	U	ND< 337	U	ND< 330	U	ND< 336	U	ND< 312	U
Bis(2-Ethylhexyl) Phthalate		ND< 343	U	ND< 341	U	ND< 357	U	ND< 347	U	ND< 353	U	ND< 360	U	ND< 365	U	ND< 320	U	ND< 320	U	ND< 371	U	ND< 337	U	ND< 330	U	ND< 336	U	ND< 312	U
Caprolactam		ND< 343	U	ND< 341	U	ND< 357	U	ND< 347	U	ND< 353	U	ND< 360	U	ND< 365	U	ND< 320	U	ND< 320	U	ND< 371	U	ND< 337	U	ND< 330	U	ND< 336	U	ND< 312	U
Carbazole		ND< 343	U	ND< 341	U	ND< 357	U	ND< 347	U	ND< 353	U	ND< 360	U	ND< 365	U	ND< 320	U	ND< 320	U	ND< 371	U	ND< 337	U	ND< 330	U	ND< 336	U	ND< 312	U
Chrysene	3900	ND< 343	U	ND< 341	U	ND< 357	U	ND< 347	U	ND< 353	U	495		ND< 365	U	ND< 320	U	ND< 320	U	ND< 371	U	ND< 337	U	ND< 330	U	ND< 336	U	ND< 312	U
Dibenz(A,H)Anthracene	**330**	**ND< 343**	**U**	**ND< 341**	**U**	**ND< 357**	**U**	**ND< 347**	**U**	**ND< 353**	**U**	**ND< 360**	**U**	**ND< 365**	**U**	ND< 320	U	ND< 320	U	**ND< 371**	**U**	**ND< 337**	**U**	ND< 330	U	**ND< 336**	**U**	ND< 312	U
Dibenzofuran	59000	ND< 343	U	ND< 341	U	ND< 357	U	ND< 347	U	ND< 353	U	ND< 360	U	ND< 365	U	ND< 320	U	ND< 320	U	ND< 371	U	ND< 337	U	ND< 330	U	ND< 336	U	ND< 312	U
Diethyl Phthalate		ND< 343	U	ND< 341	U	ND< 357	U	ND< 347	U	ND< 353	U	ND< 360	U	ND< 365	U	ND< 320	U	ND< 320	U	ND< 371	U	ND< 337	U	ND< 330	U	ND< 336	U	ND< 312	U
Dimethyl Phthalate		ND< 687	U	ND< 683	U	ND< 714	U	ND< 695	U	ND< 707	U	ND< 720	U	ND< 729	U	ND< 639	U	ND< 641	U	ND< 743	U	ND< 674	U	ND< 660	U	ND< 672	U	ND< 625	U
Di-N-Butyl Phthalate		ND< 343	U	ND< 341	U	ND< 357	U	ND< 347	U	ND< 353	U	ND< 360	U	ND< 365	U	ND< 320	U	ND< 320	U	ND< 371	U	ND< 337	U	ND< 330	U	ND< 336	U	ND< 312	U
Di-N-Octylphthalate		ND< 343	U	ND< 341	U	ND< 357	U	ND< 347	U	ND< 353	U	ND< 360	U	ND< 365	U	ND< 320	U	ND< 320	U	ND< 371	U	ND< 337	U	ND< 330	U	ND< 336	U	ND< 312	U
Fluoranthene	100000	ND< 343	U	ND< 341	U	ND< 357	U	ND< 347	U	ND< 353	U	408		ND< 365	U	ND< 320	U	ND< 320	U	ND< 371	U	ND< 337	U	ND< 330	U	ND< 336	U	ND< 312	U
Fluorene	100000	ND< 343	U	ND< 341	U	ND< 357	U	ND< 347	U	ND< 353	U	ND< 360	U	ND< 365	U	ND< 320	U	ND< 320	U	ND< 371	U	ND< 337	U	ND< 330	U	ND< 336	U	ND< 312	U
Hexachlorobenzene	1200	ND< 343	U	ND< 341	U	ND< 357	U	ND< 347	U	ND< 353	U	ND< 360	U	ND< 365	U	ND< 320	U	ND< 320	U	ND< 371	U	ND< 337	U	ND< 330	U	ND< 336	U	ND< 312	U
Hexachlorobutadiene		ND< 343	U	ND< 341	U	ND< 357	U	ND< 347	U	ND< 353	U	ND< 360	U	ND< 365	U	ND< 320	U	ND< 320	U	ND< 371	U	ND< 337	U	ND< 330	U	ND< 336	U	ND< 312	U
Hexachlorocyclopentadiene		ND< 343	U	ND< 341	U	ND< 357	U	ND< 347	U	ND< 353	U	ND< 360	U	ND< 365	U	ND< 320	U	ND< 320	U	ND< 371	U	ND< 337	U	ND< 330	U	ND< 336	U	ND< 312	U
Hexachloroethane		ND< 343	U	ND< 341	U	ND< 357	U	ND< 347	U	ND< 353	U	ND< 360	U	ND< 365	U	ND< 320	U	ND< 320	U	ND< 371	U	ND< 337	U	ND< 330	U	ND< 336	U	ND< 312	U
Indeno(1,2,3-C,D)Pyrene	500	ND< 343	U	ND< 341	U	ND< 357	U	ND< 347	U	ND< 353	U	321	J	ND< 365	U	ND< 320	U	ND< 320	U	ND< 371	U	ND< 337	U	ND< 330	U	ND< 336	U	ND< 312	U
Isophorone		ND< 343	U	ND< 341	U	ND< 357	U	ND< 347	U	ND< 353	U	ND< 360	U	ND< 365	U	ND< 320	U	ND< 320	U	ND< 371	U	ND< 337	U	ND< 330	U	ND< 336	U	ND< 312	U
Naphthalene	100000	ND< 343	U	ND< 341	U	ND< 357	U	ND< 347	U	ND< 353	U	ND< 360	U	ND< 365	U	ND< 320	U	ND< 320	U	ND< 371	U	ND< 337	U	ND< 330	U	ND< 336	U	ND< 312	U
Nitrobenzene		ND< 343	U	ND< 341	U	ND< 357	U	ND< 347	U	ND< 353	U	ND< 360	U	ND< 365	U	ND< 320	U	ND< 320	U	ND< 371	U	ND< 337	U	ND< 330	U	ND< 336	U	ND< 312	U
N-Nitrosodi-N-Propylamine		ND< 343	U	ND< 341	U	ND< 357	U	ND< 347	U	ND< 353	U	ND< 360	U	ND< 365	U	ND< 320	U	ND< 320	U	ND< 371	U	ND< 337	U	ND< 330	U	ND< 336	U	ND< 312	U
N-Nitrosodiphenylamine		ND< 343	U	ND< 341	U	ND< 357	U	ND< 347	U	ND< 353	U	ND< 360	U	ND< 365	U	ND< 320	U	ND< 320	U	ND< 371	U	ND< 337	U	ND< 330	U	ND< 336	U	ND< 312	U
Pentachlorophenol	6700	ND< 687	U	ND< 683	U	ND< 714	U	ND< 695	U	ND< 707	U	ND< 720	U	ND< 729	U	ND< 639	U	ND< 641	U	ND< 743	U	ND< 674	U	ND< 660	U	ND< 672	U	ND< 625	U
Phenanthrene	100000	ND< 343	U	ND< 341	U	ND< 357	U	ND< 347	U	ND< 353	U	ND< 360	U	ND< 365	U	ND< 320	U	ND< 320	U	ND< 371	U	ND< 337	U	ND< 330	U	ND< 336	U	ND< 312	U
Phenol	100000	ND< 343	U	ND< 341	U	ND< 357	U	ND< 347	U	ND< 353	U	ND< 360	U	ND< 365	U	ND< 320	U	ND< 320	U	ND< 371	U	ND< 337	U	ND< 330	U	ND< 336	U	ND< 312	U
Pyrene	100000	ND< 343	U	ND< 341	U	ND< 357	U	ND< 347	U	ND< 353	U	730		ND< 365	U	ND< 320	U	ND< 320	U	ND< 371	U	ND< 337	U	ND< 330	U	ND< 336	U	ND< 312	U

NOTES:

1. Soil sample analytical results are compared to the New York State Department of Environmental Conservation (NYSDEC) Title 6 of the official compilation of New York Codes, Rules, and Regulations (NYCRR) Part 375 Restricted Residential Soil Cleanup Objectives (RRSCOs).
2. RRSCO exceedances are in bold and highlighted yellow.
3. ND = Not Detected
4. Results shown as "ND" with Reporting Limits exceeding RRSCOs are in bold.
5. SVOCs = Semi-Volatile Organic Compounds
6. µg/kg = micrograms per kilogram.
7. Qualifier (Q) definitions are provided in the official lab reports.

TABLE 2B: Semi-Volatile Organic Compounds (SVOCs) in Soil
AOC-2 - Auto Garage Area
Soil Sample Results (non-QA/QC)
Hudson River Psychiatric Center - North BCP Site, Poughkeepsie, NY
PVE Sheffler File #560909

	Date Sampled	5/6/2014		5/6/2014		5/6/2014		5/6/2014		5/6/2014		5/6/2014		5/6/2014		5/6/2014		5/6/2014		5/6/2014		5/6/2014		5/6/2014		5/6/2014		7/15/2014	
	Location	AG-8		AG-9		AG-9		AG-9		AG-10		AG-10		AG-10		AG-11		AG-11		AG-11		AG-12		AG-12		AG-12		AG-13	
	Sample ID	AG-8 3.75-5'		AG-9 0-2"		AG-9 1-2'		AG-9 5-6'		AG-10 0-2"		AG-10 1-2'		AG-10 9-12'		AG-11 0-2"		AG-11 1-2'		AG-11 6-8'		AG-12 0-2"		AG-12 1-2'		AG-12 7-9'		AG-13 0-2"	
Analyte	RRSCOs	Result	Q	Result	Q	Result	Q	Result	Q	Result	Q	Result	Q	Result	Q	Result	Q	Result	Q	Result	Q	Result	Q	Result	Q	Result	Q	Result	Q
SVOCs (µg/kg)																													
1,2,4,5-Tetrachlorobenzene		ND< 323	U	ND< 327	U	ND< 311	U	ND< 327	U	ND< 384	U	ND< 314	U	ND< 357	U	ND< 341	U	ND< 312	U	ND< 363	U	ND< 324	U	ND< 340	U	ND< 364	U	ND< 299	U
1,2,4-Trichlorobenzene		ND< 323	U	ND< 327	U	ND< 311	U	ND< 327	U	ND< 384	U	ND< 314	U	ND< 357	U	ND< 341	U	ND< 312	U	ND< 363	U	ND< 324	U	ND< 340	U	ND< 364	U	ND< 299	U
1,2-Dichlorobenzene	100000	ND< 323	U	ND< 327	U	ND< 311	U	ND< 327	U	ND< 384	U	ND< 314	U	ND< 357	U	ND< 341	U	ND< 312	U	ND< 363	U	ND< 324	U	ND< 340	U	ND< 364	U	ND< 299	U
1,3-Dichlorobenzene	49000	ND< 323	U	ND< 327	U	ND< 311	U	ND< 327	U	ND< 384	U	ND< 314	U	ND< 357	U	ND< 341	U	ND< 312	U	ND< 363	U	ND< 324	U	ND< 340	U	ND< 364	U	ND< 299	U
1,4-Dichlorobenzene	13000	ND< 323	U	ND< 327	U	ND< 311	U	ND< 327	U	ND< 384	U	ND< 314	U	ND< 357	U	ND< 341	U	ND< 312	U	ND< 363	U	ND< 324	U	ND< 340	U	ND< 364	U	ND< 299	U
2,2-Oxybis(2-Chloropropane)		ND< 323	U	ND< 327	U	ND< 311	U	ND< 327	U	ND< 384	U	ND< 314	U	ND< 357	U	ND< 341	U	ND< 312	U	ND< 363	U	ND< 324	U	ND< 340	U	ND< 364	U	ND< 299	U
2,3,4,6-Tetrachlorophenol		ND< 323	U	ND< 327	U	ND< 311	U	ND< 327	U	ND< 384	U	ND< 314	U	ND< 357	U	ND< 341	U	ND< 312	U	ND< 363	U	ND< 324	U	ND< 340	U	ND< 364	U	ND< 299	U
2,4,5-Trichlorophenol		ND< 646	U	ND< 653	U	ND< 622	U	ND< 655	U	ND< 768	U	ND< 628	U	ND< 715	U	ND< 683	U	ND< 625	U	ND< 727	U	ND< 648	U	ND< 680	U	ND< 727	U	ND< 598	U
2,4,6-Trichlorophenol		ND< 323	U	ND< 327	U	ND< 311	U	ND< 327	U	ND< 384	U	ND< 314	U	ND< 357	U	ND< 341	U	ND< 312	U	ND< 363	U	ND< 324	U	ND< 340	U	ND< 364	U	ND< 299	U
2,4-Dichlorophenol		ND< 323	U	ND< 327	U	ND< 311	U	ND< 327	U	ND< 384	U	ND< 314	U	ND< 357	U	ND< 341	U	ND< 312	U	ND< 363	U	ND< 324	U	ND< 340	U	ND< 364	U	ND< 299	U
2,4-Dimethylphenol		ND< 323	U	ND< 327	U	ND< 311	U	ND< 327	U	ND< 384	U	ND< 314	U	ND< 357	U	ND< 341	U	ND< 312	U	ND< 363	U	ND< 324	U	ND< 340	U	ND< 364	U	ND< 299	U
2,4-Dinitrophenol		ND< 646	U	ND< 653	U	ND< 622	U	ND< 655	U	ND< 768	U	ND< 628	U	ND< 715	U	ND< 683	U	ND< 625	U	ND< 727	U	ND< 648	U	ND< 680	U	ND< 727	U	ND< 598	U
2,4-Dinitrotoluene		ND< 323	U	ND< 327	U	ND< 311	U	ND< 327	U	ND< 384	U	ND< 314	U	ND< 357	U	ND< 341	U	ND< 312	U	ND< 363	U	ND< 324	U	ND< 340	U	ND< 364	U	ND< 299	U
2,6-Dinitrotoluene		ND< 323	U	ND< 327	U	ND< 311	U	ND< 327	U	ND< 384	U	ND< 314	U	ND< 357	U	ND< 341	U	ND< 312	U	ND< 363	U	ND< 324	U	ND< 340	U	ND< 364	U	ND< 299	U
2-Chloronaphthalene		ND< 323	U	ND< 327	U	ND< 311	U	ND< 327	U	ND< 384	U	ND< 314	U	ND< 357	U	ND< 341	U	ND< 312	U	ND< 363	U	ND< 324	U	ND< 340	U	ND< 364	U	ND< 299	U
2-Chlorophenol		ND< 323	U	ND< 327	U	ND< 311	U	ND< 327	U	ND< 384	U	ND< 314	U	ND< 357	U	ND< 341	U	ND< 312	U	ND< 363	U	ND< 324	U	ND< 340	U	ND< 364	U	ND< 299	U
2-Methylnaphthalene		ND< 323	U	ND< 327	U	ND< 311	U	ND< 327	U	ND< 384	U	ND< 314	U	ND< 357	U	ND< 341	U	ND< 312	U	ND< 363	U	ND< 324	U	ND< 340	U	ND< 364	U	ND< 299	U
2-Methylphenol (O-Cresol)	100000	ND< 323	U	ND< 327	U	ND< 311	U	ND< 327	U	ND< 384	U	ND< 314	U	ND< 357	U	ND< 341	U	ND< 312	U	ND< 363	U	ND< 324	U	ND< 340	U	ND< 364	U	ND< 299	U
2-Nitroaniline		ND< 646	U	ND< 653	U	ND< 622	U	ND< 655	U	ND< 768	U	ND< 628	U	ND< 715	U	ND< 683	U	ND< 625	U	ND< 727	U	ND< 648	U	ND< 680	U	ND< 727	U	ND< 598	U
2-Nitrophenol		ND< 323	U	ND< 327	U	ND< 311	U	ND< 327	U	ND< 384	U	ND< 314	U	ND< 357	U	ND< 341	U	ND< 312	U	ND< 363	U	ND< 324	U	ND< 340	U	ND< 364	U	ND< 299	U
3,3'-Dichlorobenzidine		ND< 323	U	ND< 327	U	ND< 311	U	ND< 327	U	ND< 384	U	ND< 314	U	ND< 357	U	ND< 341	U	ND< 312	U	ND< 363	U	ND< 324	U	ND< 340	U	ND< 364	U	ND< 299	U
3-Methylphenol	100000	ND< 323	U	ND< 327	U	ND< 311	U	ND< 327	U	ND< 384	U	ND< 314	U	ND< 357	U	ND< 341	U	ND< 312	U	ND< 363	U	ND< 324	U	ND< 340	U	ND< 364	U	ND< 299	U
3-Nitroaniline		ND< 646	U	ND< 653	U	ND< 622	U	ND< 655	U	ND< 768	U	ND< 628	U	ND< 715	U	ND< 683	U	ND< 625	U	ND< 727	U	ND< 648	U	ND< 680	U	ND< 727	U	ND< 598	U
4,6-Dinitro-2-Methylphenol		ND< 646	U	ND< 653	U	ND< 622	U	ND< 655	U	ND< 768	U	ND< 628	U	ND< 715	U	ND< 683	U	ND< 625	U	ND< 727	U	ND< 648	U	ND< 680	U	ND< 727	U	ND< 598	U
4-Bromophenyl Phenyl Ether		ND< 323	U	ND< 327	U	ND< 311	U	ND< 327	U	ND< 384	U	ND< 314	U	ND< 357	U	ND< 341	U	ND< 312	U	ND< 363	U	ND< 324	U	ND< 340	U	ND< 364	U	ND< 299	U
4-Chloro-3-Methylphenol		ND< 323	U	ND< 327	U	ND< 311	U	ND< 327	U	ND< 384	U	ND< 314	U	ND< 357	U	ND< 341	U	ND< 312	U	ND< 363	U	ND< 324	U	ND< 340	U	ND< 364	U	ND< 299	U
4-Chloroaniline		ND< 323	U	ND< 327	U	ND< 311	U	ND< 327	U	ND< 384	U	ND< 314	U	ND< 357	U	ND< 341	U	ND< 312	U	ND< 363	U	ND< 324	U	ND< 340	U	ND< 364	U	ND< 299	U
4-Chlorophenyl Phenyl Ether		ND< 323	U	ND< 327	U	ND< 311	U	ND< 327	U	ND< 384	U	ND< 314	U	ND< 357	U	ND< 341	U	ND< 312	U	ND< 363	U	ND< 324	U	ND< 340	U	ND< 364	U	ND< 299	U
4-Nitroaniline		ND< 646	U	ND< 653	U	ND< 622	U	ND< 655	U	ND< 768	U	ND< 628	U	ND< 715	U	ND< 683	U	ND< 625	U	ND< 727	U	ND< 648	U	ND< 680	U	ND< 727	U	ND< 598	U
4-Nitrophenol		ND< 646	U	ND< 653	U	ND< 622	U	ND< 655	U	ND< 768	U	ND< 628	U	ND< 715	U	ND< 683	U	ND< 625	U	ND< 727	U	ND< 648	U	ND< 680	U	ND< 727	U	ND< 598	U
Acenaphthene	100000	ND< 323	U	ND< 327	U	ND< 311	U	ND< 327	U	ND< 384	U	ND< 314	U	ND< 357	U	ND< 341	U	ND< 312	U	ND< 363	U	ND< 324	U	ND< 340	U	ND< 364	U	ND< 299	U
Acenaphthylene	100000	ND< 323	U	ND< 327	U	ND< 311	U	ND< 327	U	ND< 384	U	ND< 314	U	ND< 357	U	ND< 341	U	ND< 312	U	ND< 363	U	ND< 324	U	ND< 340	U	ND< 364	U	ND< 299	U
Acetophenone		ND< 323	U	ND< 327	U	ND< 311	U	ND< 327	U	ND< 384	U	ND< 314	U	ND< 357	U	ND< 341	U	ND< 312	U	ND< 363	U	ND< 324	U	ND< 340	U	ND< 364	U	ND< 299	U
Anthracene	100000	ND< 323	U	ND< 327	U	ND< 311	U	ND< 327	U	ND< 384	U	ND< 314	U	ND< 357	U	ND< 341	U	ND< 312	U	ND< 363	U	ND< 324	U	ND< 340	U	ND< 364	U	ND< 299	U
Atrazine		ND< 323	U	ND< 327	U	ND< 311	U	ND< 327	U	ND< 384	U	ND< 314	U	ND< 357	U	ND< 341	U	ND< 312	U	ND< 363	U	ND< 324	U	ND< 340	U	ND< 364	U	ND< 299	U
Benzaldehyde		ND< 323	U	ND< 327	U	ND< 311	U	ND< 327	U	ND< 384	U	ND< 314	U	ND< 357	U	ND< 341	U	ND< 312	U	ND< 363	U	ND< 324	U	ND< 340	U	ND< 364	U	ND< 299	U
Benzo(A)Anthracene	1000	ND< 323	U	ND< 327	U	ND< 311	U	ND< 327	U	ND< 384	U	ND< 314	U	ND< 357	U	ND< 341	U	ND< 312	U	ND< 363	U	ND< 324	U	ND< 340	U	ND< 364	U	ND< 299	U
Benzo(A)Pyrene	1000	ND< 323	U	ND< 327	U	ND< 311	U	ND< 327	U	ND< 384	U	ND< 314	U	ND< 357	U	ND< 341	U	ND< 312	U	ND< 363	U	ND< 324	U	ND< 340	U	ND< 364	U	ND< 299	U
Benzo(B)Fluoranthene	1000	ND< 323	U	ND< 327	U	ND< 311	U	ND< 327	U	ND< 384	U	ND< 314	U	ND< 357	U	ND< 341	U	ND< 312	U	ND< 363	U	ND< 324	U	ND< 340	U	ND< 364	U	ND< 299	U
Benzo(G,H,I)Perylene	100000	ND< 323	U	ND< 327	U	ND< 311	U	ND< 327	U	ND< 384	U	ND< 314	U	ND< 357	U	ND< 341	U	ND< 312	U	ND< 363	U	ND< 324	U	ND< 340	U	ND< 364	U	ND< 299	U
Benzo(K)Fluoranthene	3900	ND< 323	U	ND< 327	U	ND< 311	U	ND< 327	U	ND< 384	U	ND< 314	U	ND< 357	U	ND< 341	U	ND< 312	U	ND< 363	U	ND< 324	U	ND< 340	U	ND< 364	U	ND< 299	U
Benzyl Butyl Phthalate		ND< 323	U	ND< 327	U	ND< 311	U	ND< 327	U	ND< 384	U	ND< 314	U	ND< 357	U	ND< 341	U	ND< 312	U	ND< 363	U	ND< 324	U	ND< 340	U	ND< 364	U	ND< 299	U
Biphenyl (Diphenyl)		ND< 323	U	ND< 327	U	ND< 311	U	ND< 327	U	ND< 384	U	ND< 314	U	ND< 357	U	ND< 341	U	ND< 312	U	ND< 363	U	ND< 324	U	ND< 340	U	ND< 364	U	ND< 299	U
Bis(2-Chloroethoxy) Methane		ND< 323	U	ND< 327	U	ND< 311	U	ND< 327	U	ND< 384	U	ND< 314	U	ND< 357	U	ND< 341	U	ND< 312	U	ND< 363	U	ND< 324	U	ND< 340	U	ND< 364	U	ND< 299	U
Bis(2-Chloroethyl) Ether (2-Chloroethyl Ether)		ND< 323	U	ND< 327	U	ND< 311	U	ND< 327	U	ND< 384	U	ND< 314	U	ND< 357	U	ND< 341	U	ND< 312	U	ND< 363	U	ND< 324	U	ND< 340	U	ND< 364	U	ND< 299	U
Bis(2-Ethylhexyl) Phthalate		ND< 323	U	ND< 327	U	ND< 311	U	ND< 327	U	ND< 384	U	ND< 314	U	ND< 357	U	ND< 341	U	ND< 312	U	ND< 363	U	ND< 324	U	ND< 340	U	ND< 364	U	962	
Caprolactam		ND< 323	U	ND< 327	U	ND< 311	U	ND< 327	U	ND< 384	U	ND< 314	U	ND< 357	U	ND< 341	U	ND< 312	U	ND< 363	U	ND< 324	U	ND< 340	U	ND< 364	U	ND< 299	U
Carbazole		ND< 323	U	ND< 327	U	ND< 311	U	ND< 327	U	ND< 384	U	ND< 314	U	ND< 357	U	ND< 341	U	ND< 312	U	ND< 363	U	ND< 324	U	ND< 340	U	ND< 364	U	ND< 299	U
Chrysene	3900	ND< 323	U	ND< 327	U	ND< 311	U	ND< 327	U	ND< 384	U	ND< 314	U	ND< 357	U	ND< 341	U	ND< 312	U	ND< 363	U	ND< 324	U	ND< 340	U	ND< 364	U	ND< 299	U
Dibenz(A,H)Anthracene	**330**	ND< 323	U	ND< 327	U	ND< 311	U	ND< 327	U	**ND< 384**	**U**	ND< 314	U	**ND< 357**	**U**	**ND< 341**	**U**	ND< 312	U	**ND< 363**	**U**	ND< 324	U	**ND< 340**	**U**	**ND< 364**	**U**	ND< 299	U
Dibenzofuran	59000	ND< 323	U	ND< 327	U	ND< 311	U	ND< 327	U	ND< 384	U	ND< 314	U	ND< 357	U	ND< 341	U	ND< 312	U	ND< 363	U	ND< 324	U	ND< 340	U	ND< 364	U	ND< 299	U
Diethyl Phthalate		ND< 323	U	ND< 327	U	ND< 311	U	ND< 327	U	ND< 384	U	ND< 314	U	ND< 357	U	ND< 341	U	ND< 312	U	ND< 363	U	ND< 324	U	ND< 340	U	ND< 364	U	ND< 299	U
Dimethyl Phthalate		ND< 646	U	ND< 653	U	ND< 622	U	ND< 655	U	ND< 768	U	ND< 628	U	ND< 715	U	ND< 683	U	ND< 625	U	ND< 727	U	ND< 648	U	ND< 680	U	ND< 727	U	ND< 598	U
Di-N-Butyl Phthalate		ND< 323	U	ND< 327	U	ND< 311	U	ND< 327	U	ND< 384	U	ND< 314	U	ND< 357	U	ND< 341	U	ND< 312	U	ND< 363	U	ND< 324	U	ND< 340	U	ND< 364	U	ND< 299	U
Di-N-Octylphthalate		ND< 323	U	ND< 327	U	ND< 311	U	ND< 327	U	ND< 384	U	ND< 314	U	ND< 357	U	ND< 341	U	ND< 312	U	ND< 363	U	ND< 324	U	ND< 340	U	ND< 364	U	ND< 299	U
Fluoranthene	100000	ND< 323	U	ND< 327	U	ND< 311	U	ND< 327	U	ND< 384	U	ND< 314	U	ND< 357	U	ND< 341	U	ND< 312	U	ND< 363	U	ND< 324	U	ND< 340	U	ND< 364	U	ND< 299	U
Fluorene	100000	ND< 323	U	ND< 327	U	ND< 311	U	ND< 327	U	ND< 384	U	ND< 314	U	ND< 357	U	ND< 341	U	ND< 312	U	ND< 363	U	ND< 324	U	ND< 340	U	ND< 364	U	ND< 299	U
Hexachlorobenzene	1200	ND< 323	U	ND< 327	U	ND< 311	U	ND< 327	U	ND< 384	U	ND< 314	U	ND< 357	U	ND< 341	U	ND< 312	U	ND< 363	U	ND< 324	U	ND< 340	U	ND< 364	U	ND< 299	U
Hexachlorobutadiene		ND< 323	U	ND< 327	U	ND< 311	U	ND< 327	U	ND< 384	U	ND< 314	U	ND< 357	U	ND< 341	U	ND< 312	U	ND< 363	U	ND< 324	U	ND< 340	U	ND< 364	U	ND< 299	U
Hexachlorocyclopentadiene		ND< 323	U	ND< 327	U	ND< 311	U	ND< 327	U	ND< 384	U	ND< 314	U	ND< 357	U	ND< 341	U	ND< 312	U	ND< 363	U	ND< 324	U	ND< 340	U	ND< 364	U	ND< 299	U
Hexachloroethane		ND< 323	U	ND< 327	U	ND< 311	U	ND< 327	U	ND< 384	U	ND< 314	U	ND< 357	U	ND< 341	U	ND< 312	U	ND< 363	U	ND< 324	U	ND< 340	U	ND< 364	U	ND< 299	U
Indeno(1,2,3-C,D)Pyrene	500	ND< 323	U	ND< 327	U	ND< 311	U	ND< 327	U	ND< 384	U	ND< 314	U	ND< 357	U	ND< 341	U	ND< 312	U	ND< 363	U	ND< 324	U	ND< 340	U	ND< 364	U	ND< 299	U
Isophorone		ND< 323	U	ND< 327	U	ND< 311	U	ND< 327	U	ND< 384	U	ND< 314	U	ND< 357	U	ND< 341	U	ND< 312	U	ND< 363	U	ND< 324	U	ND< 340	U	ND< 364	U	ND< 299	U
Naphthalene	100000	ND< 323	U	ND< 327	U	ND< 311	U	ND< 327	U	ND< 384	U	ND< 314	U	ND< 357	U	ND< 341	U	ND< 312	U	ND< 363	U	ND< 324	U	ND< 340	U	ND< 364	U	ND< 299	U
Nitrobenzene		ND< 323	U	ND< 327	U	ND< 311	U	ND< 327	U	ND< 384	U	ND< 314	U	ND< 357	U	ND< 341	U	ND< 312	U	ND< 363	U	ND< 324	U	ND< 340	U	ND< 364	U	ND< 299	U
N-Nitrosodi-N-Propylamine		ND< 323	U	ND< 327	U	ND< 311	U	ND< 327	U	ND< 384	U	ND< 314	U	ND< 357	U	ND< 341	U	ND< 312	U	ND< 363	U	ND< 324	U	ND< 340	U	ND< 364	U	ND< 299	U
N-Nitrosodiphenylamine		ND< 323	U	ND< 327	U	ND< 311	U	ND< 327	U	ND< 384	U	ND< 314	U	ND< 357	U	ND< 341	U	ND< 312	U	ND< 363	U	ND< 324	U	ND< 340	U	ND< 364	U	ND< 299	U
Pentachlorophenol	6700	ND< 646	U	ND< 653	U	ND< 622	U	ND< 655	U	ND< 768	U	ND< 628	U	ND< 715	U	ND< 683	U	ND< 625	U	ND< 727	U	ND< 648	U	ND< 680	U	ND< 727	U	ND< 598	U
Phenanthrene	100000	ND< 323	U	ND< 327	U	ND< 311	U	ND< 327	U	ND< 384	U	ND< 314	U	ND< 357	U	ND< 341	U	ND< 312	U	ND< 363	U	ND< 324	U	ND< 340	U	ND< 364	U	ND< 299	U
Phenol	100000	ND< 323	U	ND< 327	U	ND< 311	U	ND< 327	U	ND< 384	U	ND< 314	U	ND< 357	U	ND< 341	U	ND< 312	U	ND< 363	U	ND< 324	U	ND< 340	U	ND< 364	U	ND< 299	U
Pyrene	100000	ND< 323	U	ND< 327	U	ND< 311	U	ND< 327	U	ND< 384	U	ND< 314	U	ND< 357	U	ND< 341	U	ND< 312	U	ND< 363	U	ND< 324	U	ND< 340	U	ND< 364	U	ND< 299	U

NOTES:

1. Soil sample analytical results are compared to the New York State Department of Environmental Conservation (NYSDEC) Title 6 of the official compilation of New York Codes, Rules, and Regulations (NYCRR) Part 375 Restricted Residential Soil Cleanup Objectives (RRSCOs).
2. RRSCO exceedances are in bold and highlighted yellow.
3. ND = Not Detected
4. Results shown as "ND" with Reporting Limits exceeding RRSCOs are in bold.
5. SVOCs = Semi-Volatile Organic Compounds
6. µg/kg = micrograms per kilogram.
7. Qualifier (Q) definitions are provided in the official lab reports.

TABLE 2B: Semi-Volatile Organic Compounds (SVOCs) in Soil
AOC-2 - Auto Garage Area
Soil Sample Results (non-QA/QC)
Hudson River Psychiatric Center - North BCP Site, Poughkeepsie, NY
PVE Sheffler File #560909

	Date Sampled	7/15/2014		7/15/2014		7/15/2014		7/15/2014		7/15/2014		7/15/2014	
	Location	AG-13		AG-13		AG-SS-1		AG-SS-1		AG-SS-2		AG-SS-2	
	Sample ID	AG-13 1-2'		AG-13 7.5-9'		AG-SS-1 0-2"		AG-SS-1 1-2'		AG-SS-2 0-2"		AG-SS-2 1-2'	
Analyte	RRSCOs	Result	Q	Result	Q	Result	Q	Result	Q	Result	Q	Result	Q
SVOCs (µg/kg)													
1,2,4,5-Tetrachlorobenzene		ND< 316	U	ND< 309	U	ND< 319	U	ND< 371	U	ND< 306	U	ND< 395	U
1,2,4-Trichlorobenzene		ND< 316	U	ND< 309	U	ND< 319	U	ND< 371	U	ND< 306	U	ND< 395	U
1,2-Dichlorobenzene	100000	ND< 316	U	ND< 309	U	ND< 319	U	ND< 371	U	ND< 306	U	ND< 395	U
1,3-Dichlorobenzene	49000	ND< 316	U	ND< 309	U	ND< 319	U	ND< 371	U	ND< 306	U	ND< 395	U
1,4-Dichlorobenzene	13000	ND< 316	U	ND< 309	U	ND< 319	U	ND< 371	U	ND< 306	U	ND< 395	U
2,2-Oxybis(2-Chloropropane)		ND< 316	U	ND< 309	U	ND< 319	U	ND< 371	U	ND< 306	U	ND< 395	U
2,3,4,6-Tetrachlorophenol		ND< 316	U	ND< 309	U	ND< 319	U	ND< 371	U	ND< 306	U	ND< 395	U
2,4,5-Trichlorophenol		ND< 632	U	ND< 619	U	ND< 638	U	ND< 742	U	ND< 612	U	ND< 789	U
2,4,6-Trichlorophenol		ND< 316	U	ND< 309	U	ND< 319	U	ND< 371	U	ND< 306	U	ND< 395	U
2,4-Dichlorophenol		ND< 316	U	ND< 309	U	ND< 319	U	ND< 371	U	ND< 306	U	ND< 395	U
2,4-Dimethylphenol		ND< 316	U	ND< 309	U	ND< 319	U	ND< 371	U	ND< 306	U	ND< 395	U
2,4-Dinitrophenol		ND< 632	U	ND< 619	U	ND< 638	U	ND< 742	U	ND< 612	U	ND< 789	U
2,4-Dinitrotoluene		ND< 316	U	ND< 309	U	ND< 319	U	ND< 371	U	ND< 306	U	ND< 395	U
2,6-Dinitrotoluene		ND< 316	U	ND< 309	U	ND< 319	U	ND< 371	U	ND< 306	U	ND< 395	U
2-Chloronaphthalene		ND< 316	U	ND< 309	U	ND< 319	U	ND< 371	U	ND< 306	U	ND< 395	U
2-Chlorophenol		ND< 316	U	ND< 309	U	ND< 319	U	ND< 371	U	ND< 306	U	ND< 395	U
2-Methylnaphthalene		ND< 316	U	ND< 309	U	ND< 319	U	ND< 371	U	ND< 306	U	ND< 395	U
2-Methylphenol (O-Cresol)	100000	ND< 316	U	ND< 309	U	ND< 319	U	ND< 371	U	ND< 306	U	ND< 395	U
2-Nitroaniline		ND< 632	U	ND< 619	U	ND< 638	U	ND< 742	U	ND< 612	U	ND< 789	U
2-Nitrophenol		ND< 316	U	ND< 309	U	ND< 319	U	ND< 371	U	ND< 306	U	ND< 395	U
3,3'-Dichlorobenzidine		ND< 316	U	ND< 309	U	ND< 319	U	ND< 371	U	ND< 306	U	ND< 395	U
3-Methylphenol	100000	ND< 316	U	ND< 309	U	ND< 319	U	ND< 371	U	ND< 306	U	ND< 395	U
3-Nitroaniline		ND< 632	U	ND< 619	U	ND< 638	U	ND< 742	U	ND< 612	U	ND< 789	U
4,6-Dinitro-2-Methylphenol		ND< 632	U	ND< 619	U	ND< 638	U	ND< 742	U	ND< 612	U	ND< 789	U
4-Bromophenyl Phenyl Ether		ND< 316	U	ND< 309	U	ND< 319	U	ND< 371	U	ND< 306	U	ND< 395	U
4-Chloro-3-Methylphenol		ND< 316	U	ND< 309	U	ND< 319	U	ND< 371	U	ND< 306	U	ND< 395	U
4-Chloroaniline		ND< 316	U	ND< 309	U	ND< 319	U	ND< 371	U	ND< 306	U	ND< 395	U
4-Chlorophenyl Phenyl Ether		ND< 316	U	ND< 309	U	ND< 319	U	ND< 371	U	ND< 306	U	ND< 395	U
4-Nitroaniline		ND< 632	U	ND< 619	U	ND< 638	U	ND< 742	U	ND< 612	U	ND< 789	U
4-Nitrophenol		ND< 632	U	ND< 619	U	ND< 638	U	ND< 742	U	ND< 612	U	ND< 789	U
Acenaphthene	100000	ND< 316	U	ND< 309	U	ND< 319	U	ND< 371	U	ND< 306	U	ND< 395	U
Acenaphthylene	100000	ND< 316	U	ND< 309	U	ND< 319	U	ND< 371	U	ND< 306	U	ND< 395	U
Acetophenone		ND< 316	U	ND< 309	U	ND< 319	U	ND< 371	U	ND< 306	U	ND< 395	U
Anthracene	100000	ND< 316	U	ND< 309	U	ND< 319	U	ND< 371	U	ND< 306	U	ND< 395	U
Atrazine		ND< 316	U	ND< 309	U	ND< 319	U	ND< 371	U	ND< 306	U	ND< 395	U
Benzaldehyde		ND< 316	U	ND< 309	U	ND< 319	U	ND< 371	U	ND< 306	U	ND< 395	U
Benzo(A)Anthracene	1000	ND< 316	U	ND< 309	U	ND< 319	U	ND< 371	U	ND< 306	U	ND< 395	U
Benzo(A)Pyrene	1000	ND< 316	U	ND< 309	U	ND< 319	U	ND< 371	U	ND< 306	U	ND< 395	U
Benzo(B)Fluoranthene	1000	ND< 316	U	ND< 309	U	ND< 319	U	ND< 371	U	ND< 306	U	ND< 395	U
Benzo(G,H,I)Perylene	100000	ND< 316	U	ND< 309	U	ND< 319	U	ND< 371	U	ND< 306	U	ND< 395	U
Benzo(K)Fluoranthene	3900	ND< 316	U	ND< 309	U	ND< 319	U	ND< 371	U	ND< 306	U	ND< 395	U
Benzyl Butyl Phthalate		ND< 316	U	ND< 309	U	ND< 319	U	ND< 371	U	ND< 306	U	ND< 395	U
Biphenyl (Diphenyl)		ND< 316	U	ND< 309	U	ND< 319	U	ND< 371	U	ND< 306	U	ND< 395	U
Bis(2-Chloroethoxy) Methane		ND< 316	U	ND< 309	U	ND< 319	U	ND< 371	U	ND< 306	U	ND< 395	U
Bis(2-Chloroethyl) Ether (2-Chloroethyl Ether)		ND< 316	U	ND< 309	U	ND< 319	U	ND< 371	U	ND< 306	U	ND< 395	U
Bis(2-Ethylhexyl) Phthalate		ND< 316	U	ND< 309	U	527		ND< 371	U	1390		ND< 395	U
Caprolactam		ND< 316	U	ND< 309	U	ND< 319	U	ND< 371	U	ND< 306	U	ND< 395	U
Carbazole		ND< 316	U	ND< 309	U	ND< 319	U	ND< 371	U	ND< 306	U	ND< 395	U
Chrysene	3900	ND< 316	U	ND< 309	U	ND< 319	U	ND< 371	U	ND< 306	U	ND< 395	U
Dibenz(A,H)Anthracene	**330**	ND< 316	U	ND< 309	U	ND< 319	U	**ND< 371**	**U**	ND< 306	U	**ND< 395**	**U**
Dibenzofuran	59000	ND< 316	U	ND< 309	U	ND< 319	U	ND< 371	U	ND< 306	U	ND< 395	U
Diethyl Phthalate		ND< 316	U	ND< 309	U	ND< 319	U	ND< 371	U	ND< 306	U	ND< 395	U
Dimethyl Phthalate		ND< 632	U	ND< 619	U	ND< 638	U	ND< 742	U	ND< 612	U	ND< 789	U
Di-N-Butyl Phthalate		ND< 316	U	ND< 309	U	ND< 319	U	ND< 371	U	ND< 306	U	ND< 395	U
Di-N-Octylphthalate		ND< 316	U	ND< 309	U	ND< 319	U	ND< 371	U	ND< 306	U	ND< 395	U
Fluoranthene	100000	ND< 316	U	ND< 309	U	ND< 319	U	ND< 371	U	ND< 306	U	246	J
Fluorene	100000	ND< 316	U	ND< 309	U	ND< 319	U	ND< 371	U	ND< 306	U	ND< 395	U
Hexachlorobenzene	1200	ND< 316	U	ND< 309	U	ND< 319	U	ND< 371	U	ND< 306	U	ND< 395	U
Hexachlorobutadiene		ND< 316	U	ND< 309	U	ND< 319	U	ND< 371	U	ND< 306	U	ND< 395	U
Hexachlorocyclopentadiene		ND< 316	U	ND< 309	U	ND< 319	U	ND< 371	U	ND< 306	U	ND< 395	U
Hexachloroethane		ND< 316	U	ND< 309	U	ND< 319	U	ND< 371	U	ND< 306	U	ND< 395	U
Indeno(1,2,3-C,D)Pyrene	500	ND< 316	U	ND< 309	U	ND< 319	U	ND< 371	U	ND< 306	U	ND< 395	U
Isophorone		ND< 316	U	ND< 309	U	ND< 319	U	ND< 371	U	ND< 306	U	ND< 395	U
Naphthalene	100000	ND< 316	U	ND< 309	U	ND< 319	U	ND< 371	U	ND< 306	U	ND< 395	U
Nitrobenzene		ND< 316	U	ND< 309	U	ND< 319	U	ND< 371	U	ND< 306	U	ND< 395	U
N-Nitrosodi-N-Propylamine		ND< 316	U	ND< 309	U	ND< 319	U	ND< 371	U	ND< 306	U	ND< 395	U
N-Nitrosodiphenylamine		ND< 316	U	ND< 309	U	ND< 319	U	ND< 371	U	ND< 306	U	ND< 395	U
Pentachlorophenol	6700	ND< 632	U	ND< 619	U	ND< 638	U	ND< 742	U	ND< 612	U	ND< 789	U
Phenanthrene	100000	ND< 316	U	ND< 309	U	ND< 319	U	ND< 371	U	ND< 306	U	ND< 395	U
Phenol	100000	ND< 316	U	ND< 309	U	ND< 319	U	ND< 371	U	ND< 306	U	ND< 395	U
Pyrene	100000	ND< 316	U	ND< 309	U	ND< 319	U	ND< 371	U	ND< 306	U	250	J

NOTES:

1. Soil sample analytical results are compared to the New York State Department of Environmental Conservation (NYSDEC) Title 6 of the official compilation of New York Codes, Rules, and Regulations (NYCRR) Part 375 Restricted Residential Soil Cleanup Objectives (RRSCOs).
2. RRSCO exceedances are in bold and highlighted yellow.
3. ND = Not Detected
4. Results shown as "ND" with Reporting Limits exceeding RRSCOs are in bold.
5. SVOCs = Semi-Volatile Organic Compounds
6. µg/kg = micrograms per kilogram.
7. Qualifier (Q) definitions are provided in the official lab reports.

Table 2C – Total Metals in Soil – AOC-2

TABLE 2C: Total Metals in Soil
AOC-2 - Auto Garage Area
Soil Sample Results (non-QA/QC)
Hudson River Psychiatric Center - North BCP Site, Poughkeepsie, NY
PVE Sheffler File #560909

	Date Sampled	5/5/2014		5/5/2014		5/5/2014		5/5/2014		5/5/2014		5/5/2014		5/5/2014		5/5/2014	
	Location	AG-1		AG-1		AG-2		AG-2		AG-3		AG-3		AG-4		AG-4	
	Sample ID	AG-1 2.25-4'		AG-1 8.5-10'		AG-2 1-3'		AG-2 8-9'		AG-3 1-2.5'		AG-3 15-17'		AG-4 4.25-5'		AG-4 7.5-9'	
Analyte	RRSCOs	Result	Q	Result	Q	Result	Q	Result	Q	Result	Q	Result	Q	Result	Q	Result	Q
Metals (mg/kg)																	
Aluminum		16000		13800		15200		15900		18800		16800		18700		18700	
Antimony		ND< 7.58	U	ND< 7.08	U	ND< 7.47	U	ND< 7.94	U	ND< 7.86	U	ND< 8.07	U	ND< 7.09	U	ND< 6.99	U
Arsenic	**16**	4.68		5.36		3.68		4.72		5.15		5.82		4.91		5.63	
Barium	400	69.0		24.1		65.2		40.4		77.3		29.1		56.3		30.7	
Beryllium	72	0.557	J	0.525	J	0.471	J	0.486	J	0.919		0.566	J	0.650		0.555	J
Cadmium	4.3	ND< 0.631	U	ND< 0.590	U	ND< 0.623	U	ND< 0.662	U	ND< 0.655	U	ND< 0.672	U	ND< 0.591	U	ND< 0.583	U
Calcium		741		1900		1840		4870		501		1580		565		859	
Chromium, Hexavalent	110	ND< 1.1	U	ND< 1.5	U	ND< 1.2	U	ND< 1.2	U	ND< 1.2	U	ND< 1.2	U	ND< 1.2	U	ND< 1.2	U
Chromium, Total		17.0		16.5		14.5		17.6		16.4		18.7		20.5		20.2	
Cobalt		11.0		12.1		8.75		11.5		7.79		11.1		15.7		13.0	
Copper	270	23.1		32.8		11.0		22.0		27.4		41.0		33.5		34.4	
Cyanide	27	ND< 0.57	U	ND< 0.73	U	ND< 0.61	U	ND< 0.58	U	ND< 0.60	U	ND< 0.60	U	ND< 0.62	U	ND< 0.58	U
Iron		25600		29800		19700		24500		18000		34300		28000		37000	
Lead	**400**	12.5		13.9		11.5		12.2		34.8		16.2		15.5		21.3	
Magnesium		5270		7180		3410		4670		3690		7710		5410		8710	
Manganese	**2000**	1140		586		605		781		105		581		267		781	
Mercury	0.81	ND< 0.228	U	ND< 0.294	U	ND< 0.243	U	ND< 0.233	U	ND< 0.241	U	ND< 0.238	U	ND< 0.249	U	ND< 0.230	U
Nickel	310	25.3		30.0		15.7		20.8		26.7		29.2		30.4		32.5	
Potassium		1060		810		920		1070		874		1080		1570		930	
Selenium	180	ND< 1.26	U	ND< 1.18	U	ND< 1.25	U	ND< 1.32	U	ND< 1.31	U	ND< 1.34	U	ND< 1.18	U	ND< 1.17	U
Silver	180	ND< 1.26	U	ND< 1.18	U	ND< 1.25	U	ND< 1.32	U	ND< 1.31	U	ND< 1.34	U	ND< 1.18	U	ND< 1.17	U
Sodium		ND< 316	U	ND< 295	U	ND< 311	U	ND< 331	U	ND< 328	U	ND< 336	U	ND< 296	U	ND< 291	U
Thallium		3.75		ND< 2.95	U	ND< 3.11	U	1.90	J	ND< 3.28	U	ND< 3.36	U	ND< 2.96	U	ND< 2.91	U
Vanadium		20.2		17.7		19.1		20.7		20.8		18.1		23.1		18.7	
Zinc	10000	77.2		101		60.9		67.2		104		117		86.1		99.9	

NOTES:

1. Soil sample analytical results are compared to the New York State Department of Environmental Conservation (NYSDEC) Title 6 of the official compilation of New York Codes, Rules, and Regulations (NYCRR) Part 375 Restricted Residential Soil Cleanup Objectives (RRSCOs).
2. RRSCO exceedances are in bold and highlighted yellow.
3. ND = Not Detected
4. Results shown as "ND" with Reporting Limits exceeding RRSCOs are in bold.
5. mg/kg = milligrams per kilogram.
6. Qualifier (Q) definitions are provided in the official lab reports.

TABLE 2C: Total Metals in Soil
AOC-2 - Auto Garage Area
Soil Sample Results (non-QA/QC)
Hudson River Psychiatric Center - North BCP Site, Poughkeepsie, NY
PVE Sheffler File #560909

	Date Sampled	5/5/2014		5/5/2014		5/5/2014		5/5/2014		5/6/2014		5/6/2014		5/6/2014		5/6/2014	
	Location	AG-5		AG-5		AG-6		AG-6		AG-8		AG-8		AG-8		AG-9	
	Sample ID	AG-5 3-4'		AG-5 8-9'		AG-6 2-4'		AG-6 8-10'		AG-8 0-2"		AG-8 1-2'		AG-8 3.75-5'		AG-9 0-2"	
Analyte	RRSCOs	Result	Q	Result	Q	Result	Q	Result	Q	Result	Q	Result	Q	Result	Q	Result	Q
Metals (mg/kg)																	
Aluminum		20000		15800		19100		13600		5740		16500		14100		10300	
Antimony		ND< 6.64	U	ND< 7.74	U	ND< 7.37	U	ND< 6.32	U	ND< 7.22	U	ND< 6.84	U	ND< 6.71	U	ND< 7.09	U
Arsenic	**16**	8.30		7.08		5.34		5.33		9.00		7.19		6.74		8.56	
Barium	400	34.6		91.2		71.2		30.4		53.2		35.0		34.2		41.0	
Beryllium	72	0.667		0.740		0.664		0.375	J	0.525	J	0.521	J	0.507	J	0.484	J
Cadmium	4.3	ND< 0.553	U	ND< 0.645	U	ND< 0.614	U	ND< 0.526	U	ND< 0.601	U	ND< 0.570	U	ND< 0.559	U	ND< 0.591	U
Calcium		707		2830		624		1080		20100		443		572		34000	D
Chromium, Hexavalent	110	ND< 1.1	U	ND< 1.3	U	ND< 1.1	U	ND< 1.1	U	ND< 1.2	U	ND< 1.1	U	ND< 1.1	U	ND< 1.1	U
Chromium, Total		19.3		20.4		19.3		16.9		12.9		18.0		16.2		14.9	
Cobalt		14.3		16.4		12.5		9.76		6.87		12.7		11.6		7.93	
Copper	270	36.2		36.2		32.8		34.9		45.9		34.8		32.8		27.8	
Cyanide	27	ND< 0.55	U	ND< 0.63	U	ND< 0.56	U	ND< 0.56	U	ND< 0.58	U	ND< 0.55	U	ND< 0.57	U	ND< 0.56	U
Iron		36700		32500		34400		31100		19000		33000		28600		24400	
Lead	**400**	16.0		15.8		19.0		16.8		342		12.8		13.4		**439**	**DM**
Magnesium		8570		5660		7010		6450		11800		7790		5670		22600	D
Manganese	**2000**	1310		962		1110		771		357		1450		745		510	M
Mercury	0.81	ND< 0.218	U	ND< 0.254	U	ND< 0.224	U	ND< 0.225	U	0.0576		0.0699		0.0316		0.0790	D
Nickel	310	35.0		33.8		31.7		26.0		21.2		31.6		25.5		22.6	
Potassium		856		2200		894		870		612		974		1270		949	
Selenium	180	ND< 1.11	U	ND< 1.29	U	ND< 1.23	U	ND< 1.05	U	ND< 2.41	U	ND< 3.42	U	ND< 1.12	U	ND< 4.73	U
Silver	180	ND< 1.11	U	ND< 1.29	U	ND< 1.23	U	ND< 1.05	U	ND< 1.20	U	ND< 1.14	U	ND< 1.12	U	ND< 1.18	U
Sodium		ND< 277	U	165	J	ND< 307	U	ND< 263	U	ND< 301	U	ND< 285	U	ND< 280	U	ND< 296	U
Thallium		3.09		2.49	J	2.79	J	ND< 2.63	U	ND< 3.01	U	ND< 2.85	U	ND< 2.80	U	ND< 2.96	U
Vanadium		20.7		24.0		18.6		14.0		15.5		17.3		16.2		19.3	
Zinc	10000	101		89.2		121		90.4		92.3		94.6		84.1		109	

NOTES:

1. Soil sample analytical results are compared to the New York State Department of Environmental Conservation (NYSDEC) Title 6 of the official compilation of New York Codes, Rules, and Regulations (NYCRR) Part 375 Restricted Residential Soil Cleanup Objectives (RRSCOs).
2. RRSCO exceedances are in bold and highlighted yellow.
3. ND = Not Detected
4. Results shown as "ND" with Reporting Limits exceeding RRSCOs are in bold.
5. mg/kg = milligrams per kilogram.
6. Qualifier (Q) definitions are provided in the official lab reports.

TABLE 2C: Total Metals in Soil

AOC-2 - Auto Garage Area

Soil Sample Results (non-QA/QC)

Hudson River Psychiatric Center - North BCP Site, Poughkeepsie, NY

PVE Sheffler File #560909

	Date Sampled	5/6/2014		5/6/2014		5/6/2014		5/6/2014		5/6/2014		5/6/2014		5/6/2014		5/6/2014	
	Location	AG-9		AG-9		AG-10		AG-10		AG-10		AG-11		AG-11		AG-11	
	Sample ID	AG-9 1-2'		AG-9 5-6'		AG-10 0-2"		AG-10 1-2'		AG-10 9-12'		AG-11 0-2"		AG-11 1-2'		AG-11 6-8'	
Analyte	RRSCOs	Result	Q	Result	Q	Result	Q	Result	Q	Result	Q	Result	Q	Result	Q	Result	Q
Metals (mg/kg)																	
Aluminum		17300		13600		12500		18400		16000		16400		19200		13200	
Antimony		ND< 6.50	U	ND< 7.14	U	ND< 8.07	U	ND< 6.90	U	ND< 7.84	U	ND< 7.24	U	ND< 6.71	U	ND< 8.06	U
Arsenic	**16**	6.39		6.94		7.53		5.64		8.69		5.40		6.26		8.21	
Barium	400	35.9		37.5		77.8		40.7		91.6		46.7		26.3		70.5	
Beryllium	72	0.567		0.516	J	0.516	J	0.527	J	0.712		0.437	J	0.587		0.633	J
Cadmium	4.3	ND< 0.542	U	0.372	J	0.481	J	ND< 0.575	U	ND< 0.653	U	0.310	J	ND< 0.559	U	ND< 0.671	U
Calcium		629		716		3400		431		1370		1280		361		1530	
Chromium, Hexavalent	110	ND< 1.1	U	ND< 1.2	U	ND< 1.4	U	ND< 1.1	U	ND< 1.3	U	ND< 1.2	U	ND< 1.1	U	ND< 1.2	U
Chromium, Total		18.4		15.4		15.8		19.6		20.5		16.9		19.1		19.5	
Cobalt		12.5		11.9		9.36		13.2		12.4		11.0		12.2		12.1	
Copper	270	35.2		36.5		31.5		30.1		36.6		25.9		38.3		37.5	
Cyanide	27	ND< 0.56	U	ND< 0.59	U	ND< 0.69	U	ND< 0.56	U	0.650		ND< 0.59	U	ND< 0.56	U	0.660	
Iron		34400		27100		22600		33500		32900		30800		38000		28700	
Lead	**400**	10.9		11.4		260		23.0		13.3		111		13.9		13.7	
Magnesium		7720		5650		4940		8850		5400		8390		8210		4700	
Manganese	**2000**	1690		866		638		1010		502		994		801		791	
Mercury	0.81	0.0398		0.0377		0.111		0.0412		0.0294		0.0605		0.0293		0.0322	
Nickel	310	32.2		26.2		23.8		32.5		30.5		29.4		32.6		28.4	
Potassium		912		1220		1320		960		2190		776		770		1560	
Selenium	180	ND< 4.33	U	ND< 2.38	U	ND< 1.34	U	ND< 3.45	U	ND< 5.22	U	ND< 3.62	U	ND< 4.47	U	ND< 1.34	U
Silver	180	ND< 1.08	U	ND< 1.19	U	ND< 1.34	U	ND< 1.15	U	ND< 1.31	U	ND< 1.21	U	ND< 1.12	U	ND< 1.34	U
Sodium		ND< 271	U	ND< 297	U	ND< 336	U	ND< 288	U	ND< 327	U	ND< 302	U	ND< 279	U	ND< 336	U
Thallium		ND< 2.71	U	ND< 2.97	U	ND< 3.36	U	ND< 2.88	U	ND< 3.27	U	ND< 3.02	U	ND< 2.79	U	ND< 3.36	U
Vanadium		17.1		15.9		23.0		18.9		23.1		17.8		17.9		20.7	
Zinc	10000	101		86.0		185		112		90.4		128		138		85.4	

NOTES:

1. Soil sample analytical results are compared to the New York State Department of Environmental Conservation (NYSDEC) Title 6 of the official compilation of New York Codes, Rules, and Regulations (NYCRR) Part 375 Restricted Residential Soil Cleanup Objectives (RRSCOs).
2. RRSCO exceedances are in bold and highlighted yellow.
3. ND = Not Detected
4. Results shown as "ND" with Reporting Limits exceeding RRSCOs are in bold.
5. mg/kg = milligrams per kilogram.
6. Qualifier (Q) definitions are provided in the official lab reports.

TABLE 2C: Total Metals in Soil
AOC-2 - Auto Garage Area
Soil Sample Results (non-QA/QC)
Hudson River Psychiatric Center - North BCP Site, Poughkeepsie, NY
PVE Sheffler File #560909

	Date Sampled	5/6/2014		5/6/2014		5/6/2014		7/15/2014		7/15/2014		7/15/2014		7/15/2014		7/15/2014	
	Location	AG-12		AG-12		AG-12		AG-13		AG-13		AG-13		AG-SS-1		AG-SS-1	
	Sample ID	AG-12 0-2"		AG-12 1-2'		AG-12 7-9'		AG-13 0-2"		AG-13 1-2'		AG-13 7.5-9'		AG-SS-1 0-2"		AG-SS-1 1-2'	
Analyte	RRSCOs	Result	Q	Result	Q	Result	Q	Result	Q	Result	Q	Result	Q	Result	Q	Result	Q
Metals (mg/kg)																	
Aluminum		5760		15700		20700		6270		18000		13900		7980		16700	
Antimony		ND< 6.38	U	ND< 6.83	U	ND< 7.99	U	ND< 6.42	U	ND< 6.55	U	ND< 6.57	U	ND< 6.73	U	ND< 8.02	U
Arsenic	**16**	**23.8**		4.11		7.75		9.60		6.02		6.89		15.9		7.08	
Barium	400	80.5		74.1		122		51.1		37.3		45.4		58.6		77.1	
Beryllium	72	0.563		0.530	J	0.894		0.714		0.633		0.562		0.631		0.566	J
Cadmium	4.3	0.332	J	ND< 0.569	U	ND< 0.666	U	ND< 0.535	U	ND< 0.546	U	ND< 0.548	U	ND< 0.561	U	ND< 0.668	U
Calcium		2330		626		1280		32100		601		861		62700		4040	
Chromium, Hexavalent	110	ND< 1.1	U	ND< 1.2	U	ND< 1.3	U	ND< 1.1	U	ND< 1.1	U	ND< 1.1	U	ND< 1.2	U	ND< 1.2	U
Chromium, Total		17.1		14.4		25.1		11.5		19.4		19.6		12.8		17.4	
Cobalt		9.42		8.73		14.6		7.76		12.0		35.4		6.82		10.4	
Copper	270	61.0		15.0		36.6		18.8		32.4		55.8		19.3		30.2	
Cyanide	27	ND< 0.56	U	0.710		ND< 0.64	U	ND< 0.54	U	ND< 0.57	U	ND< 0.55	U	ND< 0.59	U	ND< 0.59	U
Iron		30000		21400		36300		15000		32000		31600		15900		25100	
Lead	**400**	226		13.7		13.5		7.57		15.2		17.4		79.3		127	
Magnesium		1380		4550		6310		3260		6290		7200		3960		5380	
Manganese	**2000**	233		875		655		254		703		**2320**		357		767	
Mercury	0.81	0.0789		0.0135	J	0.0313		0.0113	J	0.0412		0.0303		0.0120	J	0.126	
Nickel	310	33.4		20.5		34.7		19.5		29.0		32.8		16.6		24.6	
Potassium		479		723		2670		1200		1010		889		1100		850	
Selenium	180	ND< 4.25	U	ND< 1.14	U	ND< 3.99	U	ND< 1.07	U	2.66		1.10		1.12	J	1.61	
Silver	180	ND< 1.06	U	ND< 1.14	U	ND< 1.33	U	ND< 1.07	U	ND< 1.09	U	ND< 1.10	U	ND< 1.12	U	ND< 1.34	U
Sodium		ND< 266	U	ND< 285	U	ND< 333	U	593		208	J	ND< 274	U	209	J	ND< 334	U
Thallium		ND< 2.66	U	ND< 2.85	U	ND< 3.33	U	ND< 2.68	U	ND< 2.73	U	2.14	J	ND< 2.80	U	ND< 3.34	U
Vanadium		29.1		18.3		28.4		14.6		19.6		14.3		16.6		20.6	
Zinc	10000	174		77.1		91.1		31.3		97.5		101		49.3		135	

NOTES:

1. Soil sample analytical results are compared to the New York State Department of Environmental Conservation (NYSDEC) Title 6 of the official compilation of New York Codes, Rules, and Regulations (NYCRR) Part 375 Restricted Residential Soil Cleanup Objectives (RRSCOs).
2. RRSCO exceedances are in bold and highlighted yellow.
3. ND = Not Detected
4. Results shown as "ND" with Reporting Limits exceeding RRSCOs are in bold.
5. mg/kg = milligrams per kilogram.
6. Qualifier (Q) definitions are provided in the official lab reports.

TABLE 2C: Total Metals in Soil
AOC-2 - Auto Garage Area
Soil Sample Results (non-QA/QC)
Hudson River Psychiatric Center - North BCP Site, Poughkeepsie, NY
PVE Sheffler File #560909

	Date Sampled	7/15/2014		7/15/2014	
	Location	AG-SS-2		AG-SS-2	
	Sample ID	AG-SS-2 0-2"		AG-SS-2 1-2'	
Analyte	RRSCOs	Result	Q	Result	Q
Metals (mg/kg)					
Aluminum		6390		15700	
Antimony		ND< 7.01	U	5.10	J
Arsenic	**16**	9.36		6.90	
Barium	400	56.3		383	
Beryllium	72	0.436	J	0.655	J
Cadmium	4.3	ND< 0.584	U	0.399	J
Calcium		67800		46000	
Chromium, Hexavalent	110	ND< 1.1	U	ND< 1.2	U
Chromium, Total		16.6		22.9	
Cobalt		6.58		9.83	
Copper	270	19.5		116	
Cyanide	27	ND< 0.56	U	ND< 0.63	U
Iron		16700		28900	
Lead	**400**	12.4		**1710**	
Magnesium		4910		4600	
Manganese	**2000**	310		1090	
Mercury	0.81	0.0141	J	0.305	
Nickel	310	15.7		22.9	
Potassium		1130		1850	
Selenium	180	ND< 1.17	U	0.987	J
Silver	180	ND< 1.17	U	0.962	J
Sodium		253	J	343	J
Thallium		ND< 2.92	U	ND< 3.56	U
Vanadium		13.9		20.1	
Zinc	10000	34.7		855	

NOTES:

1. Soil sample analytical results are compared to the New York State Department of Environmental Conservation (NYSDEC) Title 6 of the official compilation of New York Codes, Rules, and Regulations (NYCRR) Part 375 Restricted Residential Soil Cleanup Objectives (RRSCOs).
2. RRSCO exceedances are in bold and highlighted yellow.
3. ND = Not Detected
4. Results shown as "ND" with Reporting Limits exceeding RRSCOs are in bold.
5. mg/kg = milligrams per kilogram.
6. Qualifier (Q) definitions are provided in the official lab reports.

Table 2D – Pesticides, Herbicides, and PCBs in Soil – AOC-2

TABLE 2D: Pesticides, Herbicides, and PCBs in Soil
AOC-2 - Auto Garage Area
Soil Sample Results (non-QA/QC)
Hudson River Psychiatric Center - North BCP Site, Poughkeepsie, NY
PVE Sheffler File #560909

	Date Sampled	5/5/2014		5/5/2014		5/5/2014		5/5/2014		5/5/2014		5/5/2014		5/5/2014		5/5/2014	
	Location	AG-1		AG-1		AG-2		AG-2		AG-3		AG-3		AG-4		AG-4	
	Sample ID	AG-1 2.25-4'		AG-1 8.5-10'		AG-2 1-3'		AG-2 8-9'		AG-3 1-2.5'		AG-3 15-17'		AG-4 4.25-5'		AG-4 7.5-9'	
Analyte	RRSCOs	Result	Q	Result	Q	Result	Q	Result	Q	Result	Q	Result	Q	Result	Q	Result	Q
Pesticides (µg/kg)																	
Aldrin	97	ND< 3.38	U	ND< 3.41	U					ND< 3.57	U	ND< 3.61	U				
Alpha Bhc (Alpha Hexachlorocyclohexane)	480	ND< 3.38	U	ND< 3.41	U					ND< 3.57	U	ND< 3.61	U				
Alpha Chlordane	4200	ND< 3.38	U	ND< 3.41	U					ND< 3.57	U	ND< 3.61	U				
Alpha Endosulfan	24000	ND< 3.38	U	ND< 3.41	U					ND< 3.57	U	ND< 3.61	U				
Beta Bhc (Beta Hexachlorocyclohexane)	360	ND< 3.38	U	ND< 3.41	U					ND< 3.57	U	ND< 3.61	U				
Beta Endosulfan	24000	ND< 3.38	U	ND< 3.41	U					ND< 3.57	U	ND< 3.61	U				
Chlordane																	
Delta BHC (Delta Hexachlorocyclohexane)	100000	ND< 3.38	U	ND< 3.41	U					ND< 3.57	U	ND< 3.61	U				
Dieldrin	200	ND< 3.38	U	ND< 3.41	U					ND< 3.57	U	ND< 3.61	U				
Endosulfan Sulfate	24000	ND< 3.38	U	ND< 3.41	U					ND< 3.57	U	ND< 3.61	U				
Endrin	11000	ND< 3.38	U	ND< 3.41	U					ND< 3.57	U	17.1	P				
Endrin Aldehyde		ND< 3.38	U	ND< 3.41	U					ND< 3.57	U	11.6					
Endrin Ketone		ND< 3.38	U	ND< 3.41	U					ND< 3.57	U	9.52	P				
Gamma Bhc (Lindane)	1300	ND< 3.38	U	ND< 3.41	U					ND< 3.57	U	ND< 3.61	U				
Gamma Chlordane		ND< 3.38	U	ND< 3.41	U					ND< 3.57	U	2.76	JP				
Heptachlor	2100	ND< 3.38	U	ND< 3.41	U					ND< 3.57	U	ND< 3.61	U				
Heptachlor Epoxide		ND< 3.38	U	ND< 3.41	U					ND< 3.57	U	ND< 3.61	U				
Methoxychlor		ND< 3.38	U	ND< 3.41	U					ND< 3.57	U	3.20	JP				
P,P'-DDD	13000	ND< 3.38	U	ND< 3.41	U					ND< 3.57	U	12.5					
P,P'-DDE	8900	ND< 3.38	U	ND< 3.41	U					ND< 3.57	U	3.29	JP				
P,P'-DDT	7900	ND< 3.38	U	ND< 3.41	U					ND< 3.57	U	5.50					
Toxaphene		ND< 33.8	U	ND< 34.1	U					ND< 35.7	U	ND< 36.1	U				
Herbicides (µg/kg)																	
Silvex (2,4,5-TP)	100000	ND< 14	U	ND< 18	U					ND< 14	U	ND< 14	U				
PCBs (mg/kg)																	
PCB-1016 (Aroclor 1016)		ND< 0.0338	U	ND< 0.0341	U	ND< 0.0350	U	ND< 0.0348	U	ND< 0.0357	U	ND< 0.0361	U	ND< 0.0362	U	ND< 0.0326	U
PCB-1221 (Aroclor 1221)		ND< 0.0338	U	ND< 0.0341	U	ND< 0.0350	U	ND< 0.0348	U	ND< 0.0357	U	ND< 0.0361	U	ND< 0.0362	U	ND< 0.0326	U
PCB-1232 (Aroclor 1232)		ND< 0.0338	U	ND< 0.0341	U	ND< 0.0350	U	ND< 0.0348	U	ND< 0.0357	U	ND< 0.0361	U	ND< 0.0362	U	ND< 0.0326	U
PCB-1242 (Aroclor 1242)		ND< 0.0338	U	ND< 0.0341	U	ND< 0.0350	U	ND< 0.0348	U	ND< 0.0357	U	ND< 0.0361	U	ND< 0.0362	U	ND< 0.0326	U
PCB-1248 (Aroclor 1248)		ND< 0.0338	U	ND< 0.0341	U	ND< 0.0350	U	ND< 0.0348	U	ND< 0.0357	U	ND< 0.0361	U	ND< 0.0362	U	ND< 0.0326	U
PCB-1254 (Aroclor 1254)		ND< 0.0338	U	ND< 0.0341	U	ND< 0.0350	U	ND< 0.0348	U	ND< 0.0357	U	ND< 0.0361	U	ND< 0.0362	U	ND< 0.0326	U
PCB-1260 (Aroclor 1260)		ND< 0.0338	U	ND< 0.0341	U	ND< 0.0350	U	ND< 0.0348	U	ND< 0.0357	U	ND< 0.0361	U	ND< 0.0362	U	ND< 0.0326	U
PCB-1262 (Aroclor 1262)		ND< 0.0338	U	ND< 0.0341	U	ND< 0.0350	U	ND< 0.0348	U	ND< 0.0357	U	ND< 0.0361	U	ND< 0.0362	U	ND< 0.0326	U
PCB-1268 (Aroclor 1268)		ND< 0.0338	U	ND< 0.0341	U	ND< 0.0350	U	ND< 0.0348	U	ND< 0.0357	U	ND< 0.0361	U	ND< 0.0362	U	ND< 0.0326	U

NOTES:

1. Soil sample analytical results are compared to the New York State Department of Environmental Conservation (NYSDEC) Title 6 of the official compilation of New York Codes, Rules, and Regulations (NYCRR) Part 375 Restricted Residential Soil Cleanup Objectives (RRSCOs).
2. RRSCO exceedances are in bold and highlighted yellow.
3. ND = Not Detected
4. Results shown as "ND" with Reporting Limits exceeding RRSCOs are in bold.
5. PCBs = Polychlorinated Biphenyls
6. µg/kg = micrograms per kilogram.
7. mg/kg = milligrams per kilogram.
8. Qualifier (Q) definitions are provided in the official lab reports.

TABLE 2D: Pesticides, Herbicides, and PCBs in Soil
AOC-2 - Auto Garage Area
Soil Sample Results (non-QA/QC)
Hudson River Psychiatric Center - North BCP Site, Poughkeepsie, NY
PVE Sheffler File #560909

	Date Sampled	5/5/2014		5/5/2014		5/5/2014		5/5/2014		5/6/2014		5/6/2014		5/6/2014		5/6/2014	
	Location	AG-5		AG-5		AG-6		AG-6		AG-8		AG-8		AG-8		AG-9	
	Sample ID	AG-5 3-4'		AG-5 8-9'		AG-6 2-4'		AG-6 8-10'		AG-8 0-2"		AG-8 1-2'		AG-8 3.75-5'		AG-9 0-2"	
Analyte	RRSCOs	Result	Q	Result	Q	Result	Q	Result	Q	Result	Q	Result	Q	Result	Q	Result	Q
Pesticides (µg/kg)																	
Aldrin	97									ND< 2.0	U	ND< 1.9	U	ND< 1.9	U	ND< 1.9	U
Alpha Bhc (Alpha Hexachlorocyclohexane)	480									ND< 2.0	U	ND< 1.9	U	ND< 1.9	U	ND< 1.9	U
Alpha Chlordane	4200									ND< 2.0	U	ND< 1.9	U	ND< 1.9	U	ND< 1.9	U
Alpha Endosulfan	24000									ND< 2.0	U	ND< 1.9	U	ND< 1.9	U	ND< 1.9	U
Beta Bhc (Beta Hexachlorocyclohexane)	360									ND< 2.0	U	ND< 1.9	U	ND< 1.9	U	ND< 1.9	U
Beta Endosulfan	24000									ND< 3.9	U	ND< 3.6	U	ND< 3.7	U	ND< 3.7	U
Chlordane										ND< 200	U	ND< 190	U	ND< 190	U	ND< 190	U
Delta BHC (Delta Hexachlorocyclohexane)	100000									ND< 2.0	U	ND< 1.9	U	ND< 1.9	U	ND< 1.9	U
Dieldrin	200									ND< 3.9	U	ND< 3.6	U	ND< 3.7	U	ND< 3.7	U
Endosulfan Sulfate	24000									ND< 3.9	U	ND< 3.6	U	ND< 3.7	U	ND< 3.7	U
Endrin	11000									ND< 3.9	U	ND< 3.6	U	ND< 3.7	U	ND< 3.7	U
Endrin Aldehyde										ND< 3.9	U	ND< 3.6	U	ND< 3.7	U	ND< 3.7	U
Endrin Ketone										ND< 3.9	U	ND< 3.6	U	ND< 3.7	U	ND< 3.7	U
Gamma Bhc (Lindane)	1300									ND< 2.0	U	ND< 1.9	U	ND< 1.9	U	ND< 1.9	U
Gamma Chlordane										ND< 2.0	U	ND< 1.9	U	ND< 1.9	U	ND< 1.9	U
Heptachlor	2100									ND< 2.0	U	ND< 1.9	U	ND< 1.9	U	ND< 1.9	U
Heptachlor Epoxide										ND< 2.0	U	ND< 1.9	U	ND< 1.9	U	ND< 1.9	U
Methoxychlor										ND< 20	U	ND< 19	U	ND< 19	U	ND< 19	U
P,P'-DDD	13000									ND< 3.9	U	ND< 3.6	U	ND< 3.7	U	ND< 3.7	U
P,P'-DDE	8900									ND< 3.9	U	ND< 3.6	U	ND< 3.7	U	ND< 3.7	U
P,P'-DDT	7900									ND< 3.9	U	ND< 3.6	U	ND< 3.7	U	ND< 3.7	U
Toxaphene										ND< 200	U	ND< 190	U	ND< 190	U	ND< 190	U
Herbicides (µg/kg)																	
Silvex (2,4,5-TP)	100000									ND< 234	U	ND< 13	U	ND< 14	U	ND< 223	U
PCBs (mg/kg)																	
PCB-1016 (Aroclor 1016)		ND< 0.0314	U	ND< 0.0361	U	ND< 0.0325	U	ND< 0.0321	U	ND< 0.0339	U	ND< 0.0314	U	ND< 0.0324	U	ND< 0.0327	U
PCB-1221 (Aroclor 1221)		ND< 0.0314	U	ND< 0.0361	U	ND< 0.0325	U	ND< 0.0321	U	ND< 0.0339	U	ND< 0.0314	U	ND< 0.0324	U	ND< 0.0327	U
PCB-1232 (Aroclor 1232)		ND< 0.0314	U	ND< 0.0361	U	ND< 0.0325	U	ND< 0.0321	U	ND< 0.0339	U	ND< 0.0314	U	ND< 0.0324	U	ND< 0.0327	U
PCB-1242 (Aroclor 1242)		ND< 0.0314	U	ND< 0.0361	U	ND< 0.0325	U	ND< 0.0321	U	ND< 0.0339	U	ND< 0.0314	U	ND< 0.0324	U	ND< 0.0327	U
PCB-1248 (Aroclor 1248)		ND< 0.0314	U	ND< 0.0361	U	ND< 0.0325	U	ND< 0.0321	U	ND< 0.0339	U	ND< 0.0314	U	ND< 0.0324	U	ND< 0.0327	U
PCB-1254 (Aroclor 1254)		ND< 0.0314	U	ND< 0.0361	U	ND< 0.0325	U	ND< 0.0321	U	ND< 0.0339	U	ND< 0.0314	U	ND< 0.0324	U	ND< 0.0327	U
PCB-1260 (Aroclor 1260)		ND< 0.0314	U	ND< 0.0361	U	ND< 0.0325	U	ND< 0.0321	U	ND< 0.0339	U	ND< 0.0314	U	ND< 0.0324	U	ND< 0.0327	U
PCB-1262 (Aroclor 1262)		ND< 0.0314	U	ND< 0.0361	U	ND< 0.0325	U	ND< 0.0321	U	ND< 0.0339	U	ND< 0.0314	U	ND< 0.0324	U	ND< 0.0327	U
PCB-1268 (Aroclor 1268)		ND< 0.0314	U	ND< 0.0361	U	ND< 0.0325	U	ND< 0.0321	U	ND< 0.0339	U	ND< 0.0314	U	ND< 0.0324	U	ND< 0.0327	U

NOTES:

1. Soil sample analytical results are compared to the New York State Department of Environmental Conservation (NYSDEC) Title 6 of the official compilation of New York Codes, Rules, and Regulations (NYCRR) Part 375 Restricted Residential Soil Cleanup Objectives (RRSCOs).
2. RRSCO exceedances are in bold and highlighted yellow.
3. ND = Not Detected
4. Results shown as "ND" with Reporting Limits exceeding RRSCOs are in bold.
5. PCBs = Polychlorinated Biphenyls
6. µg/kg = micrograms per kilogram.
7. mg/kg = milligrams per kilogram.
8. Qualifier (Q) definitions are provided in the official lab reports.

TABLE 2D: Pesticides, Herbicides, and PCBs in Soil

AOC-2 - Auto Garage Area

Soil Sample Results (non-QA/QC)

Hudson River Psychiatric Center - North BCP Site, Poughkeepsie, NY

PVE Sheffler File #560909

	Date Sampled	5/6/2014		5/6/2014		5/6/2014		5/6/2014		5/6/2014		5/6/2014		5/6/2014		5/6/2014	
	Location	AG-9		AG-9		AG-10		AG-10		AG-10		AG-11		AG-11		AG-11	
	Sample ID	AG-9 1-2'		AG-9 5-6'		AG-10 0-2"		AG-10 1-2'		AG-10 9-12'		AG-11 0-2"		AG-11 1-2'		AG-11 6-8'	
Analyte	RRSCOs	Result	Q	Result	Q	Result	Q	Result	Q	Result	Q	Result	Q	Result	Q	Result	Q
Pesticides (µg/kg)																	
Aldrin	97	ND< 1.9	U	ND< 2.0	U	ND< 2.3	U	ND< 1.9	U	ND< 2.2	U	ND< 2.0	U	ND< 1.9	U	ND< 2.0	U
Alpha Bhc (Alpha Hexachlorocyclohexane)	480	ND< 1.9	U	ND< 2.0	U	ND< 2.3	U	ND< 1.9	U	ND< 2.2	U	ND< 2.0	U	ND< 1.9	U	ND< 0.1	U
Alpha Chlordane	4200	ND< 1.9	U	ND< 2.0	U	ND< 2.3	U	ND< 1.9	U	ND< 2.2	U	ND< 2.0	U	ND< 1.9	U	ND< 2.0	U
Alpha Endosulfan	24000	ND< 1.9	U	ND< 2.0	U	ND< 2.3	U	ND< 1.9	U	ND< 2.2	U	ND< 2.0	U	ND< 1.9	U	ND< 2.0	U
Beta Bhc (Beta Hexachlorocyclohexane)	360	ND< 1.9	U	ND< 2.0	U	ND< 2.3	U	ND< 1.9	U	ND< 2.2	U	ND< 2.0	U	ND< 1.9	U	ND< 2.0	U
Beta Endosulfan	24000	ND< 3.7	U	ND< 3.9	U	ND< 4.5	U	ND< 3.7	U	ND< 4.2	U	ND< 3.9	U	ND< 3.7	U	ND< 3.9	U
Chlordane		ND< 190	U	ND< 200	U	ND< 230	U	ND< 190	U	ND< 220	U	ND< 200	U	ND< 190	U	ND< 200	U
Delta BHC (Delta Hexachlorocyclohexane)	100000	ND< 1.9	U	ND< 2.0	U	ND< 2.3	U	ND< 1.9	U	ND< 2.2	U	ND< 2.0	U	ND< 1.9	U	ND< 2.0	U
Dieldrin	200	ND< 3.7	U	ND< 3.9	U	ND< 4.5	U	ND< 3.7	U	ND< 4.2	U	ND< 3.9	U	ND< 3.7	U	ND< 3.9	U
Endosulfan Sulfate	24000	ND< 3.7	U	ND< 3.9	U	ND< 4.5	U	ND< 3.7	U	ND< 4.2	U	ND< 3.9	U	ND< 3.7	U	ND< 3.9	U
Endrin	11000	ND< 3.7	U	ND< 3.9	U	ND< 4.5	U	ND< 3.7	U	ND< 4.2	U	ND< 3.9	U	ND< 3.7	U	ND< 3.9	U
Endrin Aldehyde		ND< 3.7	U	ND< 3.9	U	ND< 4.5	U	ND< 3.7	U	ND< 4.2	U	ND< 3.9	U	ND< 3.7	U	ND< 3.9	U
Endrin Ketone		ND< 3.7	U	ND< 3.9	U	ND< 4.5	U	ND< 3.7	U	ND< 4.2	U	ND< 3.9	U	ND< 3.7	U	ND< 3.9	U
Gamma Bhc (Lindane)	1300	ND< 1.9	U	ND< 2.0	U	ND< 2.3	U	ND< 1.9	U	ND< 2.2	U	ND< 2.0	U	ND< 1.9	U	ND< 2.0	U
Gamma Chlordane		ND< 1.9	U	ND< 2.0	U	ND< 2.3	U	ND< 1.9	U	ND< 2.2	U	ND< 2.0	U	ND< 1.9	U	ND< 2.0	U
Heptachlor	2100	ND< 1.9	U	ND< 2.0	U	ND< 2.3	U	ND< 1.9	U	ND< 2.2	U	ND< 2.0	U	ND< 1.9	U	ND< 2.0	U
Heptachlor Epoxide		ND< 1.9	U	ND< 2.0	U	ND< 2.3	U	ND< 1.9	U	ND< 2.2	U	ND< 2.0	U	ND< 1.9	U	ND< 2.0	U
Methoxychlor		ND< 19	U	ND< 20	U	ND< 23	U	ND< 19	U	ND< 22	U	ND< 20	U	ND< 19	U	ND< 20	U
P,P'-DDD	13000	ND< 3.7	U	ND< 3.9	U	ND< 4.5	U	ND< 3.7	U	ND< 4.2	U	ND< 3.9	U	ND< 3.7	U	ND< 3.9	U
P,P'-DDE	8900	ND< 3.7	U	ND< 3.9	U	ND< 4.5	U	ND< 3.7	U	ND< 4.2	U	ND< 3.9	U	ND< 3.7	U	ND< 3.9	U
P,P'-DDT	7900	ND< 3.7	U	ND< 3.9	U	ND< 4.5	U	ND< 3.7	U	ND< 4.2	U	ND< 3.9	U	ND< 3.7	U	ND< 3.9	U
Toxaphene		ND< 190	U	ND< 200	U	ND< 230	U	ND< 190	U	ND< 220	U	ND< 200	U	ND< 190	U	ND< 200	U
Herbicides (µg/kg)																	
Silvex (2,4,5-TP)	100000	ND< 224	U	ND< 14	U	ND< 274	U	ND< 13	U	ND< 15	U	ND< 235	U	ND< 13	U	ND< 14	U
PCBs (mg/kg)																	
PCB-1016 (Aroclor 1016)		ND< 0.0314	U	ND< 0.0321	U	ND< 0.0386	U	ND< 0.0314	U	ND< 0.0359	U	ND< 0.0340	U	ND< 0.0312	U	ND< 0.0361	U
PCB-1221 (Aroclor 1221)		ND< 0.0314	U	ND< 0.0321	U	ND< 0.0386	U	ND< 0.0314	U	ND< 0.0359	U	ND< 0.0340	U	ND< 0.0312	U	ND< 0.0361	U
PCB-1232 (Aroclor 1232)		ND< 0.0314	U	ND< 0.0321	U	ND< 0.0386	U	ND< 0.0314	U	ND< 0.0359	U	ND< 0.0340	U	ND< 0.0312	U	ND< 0.0361	U
PCB-1242 (Aroclor 1242)		ND< 0.0314	U	ND< 0.0321	U	ND< 0.0386	U	ND< 0.0314	U	ND< 0.0359	U	ND< 0.0340	U	ND< 0.0312	U	ND< 0.0361	U
PCB-1248 (Aroclor 1248)		ND< 0.0314	U	ND< 0.0321	U	ND< 0.0386	U	ND< 0.0314	U	ND< 0.0359	U	ND< 0.0340	U	ND< 0.0312	U	ND< 0.0361	U
PCB-1254 (Aroclor 1254)		ND< 0.0314	U	ND< 0.0321	U	ND< 0.0386	U	ND< 0.0314	U	ND< 0.0359	U	ND< 0.0340	U	ND< 0.0312	U	ND< 0.0361	U
PCB-1260 (Aroclor 1260)		ND< 0.0314	U	ND< 0.0321	U	ND< 0.0386	U	ND< 0.0314	U	ND< 0.0359	U	ND< 0.0340	U	ND< 0.0312	U	ND< 0.0361	U
PCB-1262 (Aroclor 1262)		ND< 0.0314	U	ND< 0.0321	U	ND< 0.0386	U	ND< 0.0314	U	ND< 0.0359	U	ND< 0.0340	U	ND< 0.0312	U	ND< 0.0361	U
PCB-1268 (Aroclor 1268)		ND< 0.0314	U	ND< 0.0321	U	ND< 0.0386	U	ND< 0.0314	U	ND< 0.0359	U	ND< 0.0340	U	ND< 0.0312	U	ND< 0.0361	U

NOTES:

1. Soil sample analytical results are compared to the New York State Department of Environmental Conservation (NYSDEC) Title 6 of the official compilation of New York Codes, Rules, and Regulations (NYCRR) Part 375 Restricted Residential Soil Cleanup Objectives (RRSCOs).
2. RRSCO exceedances are in bold and highlighted yellow.
3. ND = Not Detected
4. Results shown as "ND" with Reporting Limits exceeding RRSCOs are in bold.
5. PCBs = Polychlorinated Biphenyls
6. µg/kg = micrograms per kilogram.
7. mg/kg = milligrams per kilogram.
8. Qualifier (Q) definitions are provided in the official lab reports.

TABLE 2D: Pesticides, Herbicides, and PCBs in Soil

AOC-2 - Auto Garage Area

Soil Sample Results (non-QA/QC)

Hudson River Psychiatric Center - North BCP Site, Poughkeepsie, NY

PVE Sheffler File #560909

	Date Sampled	5/6/2014		5/6/2014		5/6/2014		7/15/2014		7/15/2014		7/15/2014		7/15/2014		7/15/2014	
	Location	AG-12		AG-12		AG-12		AG-13		AG-13		AG-13		AG-SS-1		AG-SS-1	
	Sample ID	AG-12 0-2"		AG-12 1-2'		AG-12 7-9'		AG-13 0-2"		AG-13 1-2'		AG-13 7.5-9'		AG-SS-1 0-2"		AG-SS-1 1-2'	
Analyte	RRSCOs	Result	Q	Result	Q	Result	Q	Result	Q	Result	Q	Result	Q	Result	Q	Result	Q
Pesticides (µg/kg)																	
Aldrin	97	ND< 1.9	U	ND< 2.0	U	ND< 2.2	U	ND< 2.97	U	ND< 3.17	U	ND< 3.05	U	ND< 3.17	U	ND< 3.65	U
Alpha Bhc (Alpha Hexachlorocyclohexane)	480	ND< 1.9	U	ND< 2.0	U	ND< 2.2	U	ND< 2.97	U	ND< 3.17	U	ND< 3.05	U	2.47	J	ND< 3.65	U
Alpha Chlordane	4200	ND< 1.9	U	ND< 2.0	U	ND< 2.2	U	ND< 2.97	U	ND< 3.17	U	ND< 3.05	U	ND< 3.17	U	ND< 3.65	U
Alpha Endosulfan	24000	ND< 1.9	U	ND< 2.0	U	ND< 2.2	U	ND< 2.97	U	ND< 3.17	U	ND< 3.05	U	ND< 3.17	U	ND< 3.65	U
Beta Bhc (Beta Hexachlorocyclohexane)	360	ND< 1.9	U	ND< 2.0	U	ND< 2.2	U	ND< 2.97	U	ND< 3.17	U	ND< 3.05	U	ND< 3.17	U	ND< 3.65	U
Beta Endosulfan	24000	ND< 3.7	U	ND< 4.0	U	ND< 4.2	U	ND< 2.97	U	ND< 3.17	U	ND< 3.05	U	ND< 3.17	U	ND< 3.65	U
Chlordane		ND< 190	U	ND< 200	U	ND< 220	U										
Delta BHC (Delta Hexachlorocyclohexane)	100000	ND< 1.9	U	ND< 2.0	U	ND< 2.2	U	ND< 2.97	U	ND< 3.17	U	ND< 3.05	U	ND< 3.17	U	ND< 3.65	U
Dieldrin	200	ND< 3.7	U	ND< 4.0	U	ND< 4.2	U	ND< 2.97	U	ND< 3.17	U	ND< 3.05	U	ND< 3.17	U	ND< 3.65	U
Endosulfan Sulfate	24000	ND< 3.7	U	ND< 4.0	U	ND< 4.2	U	ND< 2.97	U	ND< 3.17	U	ND< 3.05	U	ND< 3.17	U	2.08	JP
Endrin	11000	ND< 3.7	U	ND< 4.0	U	ND< 4.2	U	ND< 2.97	U	ND< 3.17	U	ND< 3.05	U	ND< 3.17	U	ND< 3.65	U
Endrin Aldehyde		ND< 3.7	U	ND< 4.0	U	ND< 4.2	U	ND< 2.97	U	ND< 3.17	U	ND< 3.05	U	ND< 3.17	U	5.26	P
Endrin Ketone		ND< 3.7	U	ND< 4.0	U	ND< 4.2	U	ND< 2.97	U	ND< 3.17	U	ND< 3.05	U	ND< 3.17	U	ND< 3.65	U
Gamma Bhc (Lindane)	1300	ND< 1.9	U	ND< 2.0	U	ND< 2.2	U	ND< 2.97	U	ND< 3.17	U	ND< 3.05	U	ND< 3.17	U	ND< 3.65	U
Gamma Chlordane		ND< 1.9	U	ND< 2.0	U	ND< 2.2	U	ND< 2.97	U	ND< 3.17	U	ND< 3.05	U	ND< 3.17	U	ND< 3.65	U
Heptachlor	2100	ND< 1.9	U	ND< 2.0	U	ND< 2.2	U	ND< 2.97	U	ND< 3.17	U	ND< 3.05	U	ND< 3.17	U	ND< 3.65	U
Heptachlor Epoxide		ND< 1.9	U	ND< 2.0	U	ND< 2.2	U	ND< 2.97	U	ND< 3.17	U	ND< 3.05	U	ND< 3.17	U	ND< 3.65	U
Methoxychlor		ND< 19	U	ND< 20	U	ND< 22	U	ND< 2.97	U	ND< 3.17	U	ND< 3.05	U	ND< 3.17	U	ND< 3.65	U
P,P'-DDD	13000	ND< 3.7	U	ND< 4.0	U	ND< 4.2	U	ND< 2.97	U	ND< 3.17	U	ND< 3.05	U	ND< 3.17	U	ND< 3.65	U
P,P'-DDE	8900	ND< 3.7	U	ND< 4.0	U	ND< 4.2	U	ND< 2.97	U	ND< 3.17	U	ND< 3.05	U	ND< 3.17	U	ND< 3.65	U
P,P'-DDT	7900	5.90		ND< 4.0	U	ND< 4.2	U	ND< 2.97	U	ND< 3.17	U	ND< 3.05	U	ND< 3.17	U	ND< 3.65	U
Toxaphene		ND< 190	U	ND< 200	U	ND< 220	U	ND< 29.7	U	ND< 31.7	U	ND< 30.5	U	ND< 31.7	U	ND< 36.5	U
Herbicides (µg/kg)																	
Silvex (2,4,5-TP)	100000	ND< 226	U	ND< 14	U	ND< 15	U	ND< 13	U	ND< 14	U	ND< 13	U	ND< 14	U	ND< 14	U
PCBs (mg/kg)																	
PCB-1016 (Aroclor 1016)		ND< 0.0322	U	ND< 0.0339	U	ND< 0.0366	U	ND< 0.0298	U	ND< 0.0314	U	ND< 0.0301	U	ND< 0.0317	U	ND< 0.0371	U
PCB-1221 (Aroclor 1221)		ND< 0.0322	U	ND< 0.0339	U	ND< 0.0366	U	ND< 0.0298	U	ND< 0.0314	U	ND< 0.0301	U	ND< 0.0317	U	ND< 0.0371	U
PCB-1232 (Aroclor 1232)		ND< 0.0322	U	ND< 0.0339	U	ND< 0.0366	U	ND< 0.0298	U	ND< 0.0314	U	ND< 0.0301	U	ND< 0.0317	U	ND< 0.0371	U
PCB-1242 (Aroclor 1242)		ND< 0.0322	U	ND< 0.0339	U	ND< 0.0366	U	ND< 0.0298	U	ND< 0.0314	U	ND< 0.0301	U	ND< 0.0317	U	ND< 0.0371	U
PCB-1248 (Aroclor 1248)		ND< 0.0322	U	ND< 0.0339	U	ND< 0.0366	U	ND< 0.0298	U	ND< 0.0314	U	ND< 0.0301	U	ND< 0.0317	U	ND< 0.0371	U
PCB-1254 (Aroclor 1254)		ND< 0.0322	U	ND< 0.0339	U	ND< 0.0366	U	ND< 0.0298	U	ND< 0.0314	U	ND< 0.0301	U	ND< 0.0317	U	ND< 0.0371	U
PCB-1260 (Aroclor 1260)		0.0212	J	ND< 0.0339	U	ND< 0.0366	U	ND< 0.0298	U	ND< 0.0314	U	ND< 0.0301	U	ND< 0.0317	U	ND< 0.0371	U
PCB-1262 (Aroclor 1262)		ND< 0.0322	U	ND< 0.0339	U	ND< 0.0366	U	ND< 0.0298	U	ND< 0.0314	U	ND< 0.0301	U	ND< 0.0317	U	ND< 0.0371	U
PCB-1268 (Aroclor 1268)		ND< 0.0322	U	ND< 0.0339	U	ND< 0.0366	U	ND< 0.0298	U	ND< 0.0314	U	ND< 0.0301	U	ND< 0.0317	U	ND< 0.0371	U

NOTES:

1. Soil sample analytical results are compared to the New York State Department of Environmental Conservation (NYSDEC) Title 6 of the official compilation of New York Codes, Rules, and Regulations (NYCRR) Part 375 Restricted Residential Soil Cleanup Objectives (RRSCOs).
2. RRSCO exceedances are in bold and highlighted yellow.
3. ND = Not Detected
4. Results shown as "ND" with Reporting Limits exceeding RRSCOs are in bold.
5. PCBs = Polychlorinated Biphenyls
6. µg/kg = micrograms per kilogram.
7. mg/kg = milligrams per kilogram.
8. Qualifier (Q) definitions are provided in the official lab reports.

TABLE 2D: Pesticides, Herbicides, and PCBs in Soil
AOC-2 - Auto Garage Area
Soil Sample Results (non-QA/QC)
Hudson River Psychiatric Center - North BCP Site, Poughkeepsie, NY
PVE Sheffler File #560909

	Date Sampled	7/15/2014		7/15/2014	
	Location	AG-SS-2		AG-SS-2	
	Sample ID	AG-SS-2 0-2"		AG-SS-2 1-2'	
Analyte	RRSCOs	Result	Q	Result	Q
Pesticides (µg/kg)					
Aldrin	97	ND< 3.06	U	ND< 3.96	U
Alpha Bhc (Alpha Hexachlorocyclohexane)	480	ND< 3.06	U	ND< 3.96	U
Alpha Chlordane	4200	ND< 3.06	U	ND< 3.96	U
Alpha Endosulfan	24000	ND< 3.06	U	ND< 3.96	U
Beta Bhc (Beta Hexachlorocyclohexane)	360	ND< 3.06	U	ND< 3.96	U
Beta Endosulfan	24000	ND< 3.06	U	3.18	J
Chlordane					
Delta BHC (Delta Hexachlorocyclohexane)	100000	ND< 3.06	U	ND< 3.96	U
Dieldrin	200	ND< 3.06	U	2.52	JP
Endosulfan Sulfate	24000	ND< 3.06	U	2.01	JP
Endrin	11000	ND< 3.06	U	ND< 3.96	U
Endrin Aldehyde		ND< 3.06	U	2.49	JP
Endrin Ketone		1.63	JP	3.47	J
Gamma Bhc (Lindane)	1300	ND< 3.06	U	ND< 3.96	U
Gamma Chlordane		ND< 3.06	U	ND< 3.96	U
Heptachlor	2100	ND< 3.06	U	ND< 3.96	U
Heptachlor Epoxide		ND< 3.06	U	ND< 3.96	U
Methoxychlor		1.64	JP	ND< 3.96	U
P,P'-DDD	13000	ND< 3.06	U	ND< 3.96	U
P,P'-DDE	8900	ND< 3.06	U	ND< 3.96	U
P,P'-DDT	7900	ND< 3.06	U	2.56	JP
Toxaphene		ND< 30.6	U	ND< 39.6	U
Herbicides (µg/kg)					
Silvex (2,4,5-TP)	100000	ND< 14	U	ND< 15	U
PCBs (mg/kg)					
PCB-1016 (Aroclor 1016)		ND< 0.0308	U	ND< 0.0396	U
PCB-1221 (Aroclor 1221)		ND< 0.0308	U	ND< 0.0396	U
PCB-1232 (Aroclor 1232)		ND< 0.0308	U	ND< 0.0396	U
PCB-1242 (Aroclor 1242)		ND< 0.0308	U	ND< 0.0396	U
PCB-1248 (Aroclor 1248)		ND< 0.0308	U	ND< 0.0396	U
PCB-1254 (Aroclor 1254)		ND< 0.0308	U	ND< 0.0396	U
PCB-1260 (Aroclor 1260)		ND< 0.0308	U	ND< 0.0396	U
PCB-1262 (Aroclor 1262)		ND< 0.0308	U	ND< 0.0396	U
PCB-1268 (Aroclor 1268)		ND< 0.0308	U	ND< 0.0396	U

NOTES:

1. Soil sample analytical results are compared to the New York State Department of Environmental Conservation (NYSDEC) Title 6 of the official compilation of New York Codes, Rules, and Regulations (NYCRR) Part 375 Restricted Residential Soil Cleanup Objectives (RRSCOs).
2. RRSCO exceedances are in bold and highlighted yellow.
3. ND = Not Detected
4. Results shown as "ND" with Reporting Limits exceeding RRSCOs are in bold.
5. PCBs = Polychlorinated Biphenyls
6. µg/kg = micrograms per kilogram.
7. mg/kg = milligrams per kilogram.
8. Qualifier (Q) definitions are provided in the official lab reports.

Table 3A – VOCs in Soil – AOC-3

TABLE 3A: Volatile Organic Compounds (VOCs) in Soil
AOC-3 - Car Wash Area
Soil Sample Results (non-QA/QC)
Hudson River Psychiatric Center - North BCP Site, Poughkeepsie, NY
PVE Sheffler File #560909

	Date Sampled	5/12/2014		5/12/2014		12/4/2014		12/15/2014		5/12/2014		5/12/2014		5/13/2014		5/13/2014		5/13/2014		5/13/2014		5/13/2014		5/13/2014	
	Location	CW-2		CW-2		CW-3		CW-3		CW-3		CW-3		CW-4		CW-4		CW-5		CW-5		CW-6		CW-6	
	Sample ID	CW-2 3-4'		CW-2 19-20'		CW-3 (0-2 ")		CW-3 2-24"		CW-3 4-5.5'		CW-3 23-24'		CW-4 2-4		CW-4 15-16		CW-5 2-4.5		CW-5 15-16		CW-6 3-4.5		CW-6 7-8	
Analyte	RRSCOs	Result	Q	Result	Q	Result	Q	Result	Q	Result	Q	Result	Q	Result	Q	Result	Q	Result	Q	Result	Q	Result	Q	Result	Q
VOCs (µg/kg)																									
1,1,1-Trichloroethane	100000	ND< 2.08	U	ND< 1.77	U	ND< 2.83	U	ND< 2.39	U	ND< 1.72	U	ND< 2.07	U	ND< 2.21	U	ND< 2.35	U	ND< 2.20	U	ND< 2.09	U	ND< 2.62	U	ND< 2.12	U
1,1,2,2-Tetrachloroethane		ND< 2.08	U	ND< 1.77	U	ND< 2.83	U	ND< 2.39	U	ND< 1.72	U	ND< 2.07	U	ND< 2.21	U	ND< 2.35	U	ND< 2.20	U	ND< 2.09	U	ND< 2.62	U	ND< 2.12	U
1,1,2-Trichloro-1,2,2-Trifluoroethane		ND< 2.08	U	ND< 1.77	U	ND< 2.83	U	ND< 2.39	U	ND< 1.72	U	ND< 2.07	U	ND< 2.21	U	ND< 2.35	U	ND< 2.20	U	ND< 2.09	U	ND< 2.62	U	ND< 2.12	U
1,1,2-Trichloroethane		ND< 2.08	U	ND< 1.77	U	ND< 2.83	U	ND< 2.39	U	ND< 1.72	U	ND< 2.07	U	ND< 2.21	U	ND< 2.35	U	ND< 2.20	U	ND< 2.09	U	ND< 2.62	U	ND< 2.12	U
1,1-Dichloroethane	26000	ND< 2.08	U	ND< 1.77	U	ND< 2.83	U	ND< 2.39	U	ND< 1.72	U	ND< 2.07	U	ND< 2.21	U	ND< 2.35	U	ND< 2.20	U	ND< 2.09	U	ND< 2.62	U	ND< 2.12	U
1,1-Dichloroethene	100000	ND< 2.08	U	ND< 1.77	U	ND< 2.83	U	ND< 2.39	U	ND< 1.72	U	ND< 2.07	U	ND< 2.21	U	ND< 2.35	U	ND< 2.20	U	ND< 2.09	U	ND< 2.62	U	ND< 2.12	U
1,2,3-Trichlorobenzene		ND< 5.19	U	ND< 4.42	U	ND< 7.08	U	ND< 5.97	U	ND< 4.31	U	ND< 5.18	U	ND< 5.51	U	ND< 5.87	U	ND< 5.51	U	ND< 5.23	U	ND< 6.54	U	ND< 5.29	U
1,2,4-Trichlorobenzene		ND< 5.19	U	ND< 4.42	U	ND< 7.08	U	ND< 5.97	U	ND< 4.31	U	ND< 5.18	U	ND< 5.51	U	ND< 5.87	U	ND< 5.51	U	ND< 5.23	U	ND< 6.54	U	ND< 5.29	U
1,2,4-Trimethylbenzene	52000	ND< 2.08	U	ND< 1.77	U	ND< 2.83	U	ND< 2.39	U	ND< 1.72	U	ND< 2.07	U	ND< 2.21	U	ND< 2.35	U	ND< 2.20	U	ND< 2.09	U	ND< 2.62	U	ND< 2.12	U
1,2-Dibromo-3-Chloropropane		ND< 10.4	U	ND< 8.84	U	ND< 14.2	U	ND< 11.9	U	ND< 8.61	U	ND< 10.4	U	ND< 11.0	U	ND< 11.7	U	ND< 11.0	U	ND< 10.5	U	ND< 13.1	U	ND< 10.6	U
1,2-Dibromoethane (Ethylene Dibromide)		ND< 2.08	U	ND< 1.77	U	ND< 2.83	U	ND< 2.39	U	ND< 1.72	U	ND< 2.07	U	ND< 2.21	U	ND< 2.35	U	ND< 2.20	U	ND< 2.09	U	ND< 2.62	U	ND< 2.12	U
1,2-Dichlorobenzene	100000	ND< 2.08	U	ND< 1.77	U	ND< 2.83	U	ND< 2.39	U	ND< 1.72	U	ND< 2.07	U	ND< 2.21	U	ND< 2.35	U	ND< 2.20	U	ND< 2.09	U	ND< 2.62	U	ND< 2.12	U
1,2-Dichloroethane	3100	ND< 2.08	U	ND< 1.77	U	ND< 2.83	U	ND< 2.39	U	ND< 1.72	U	ND< 2.07	U	ND< 2.21	U	ND< 2.35	U	ND< 2.20	U	ND< 2.09	U	ND< 2.62	U	ND< 2.12	U
1,2-Dichloropropane		ND< 2.08	U	ND< 1.77	U	ND< 2.83	U	ND< 2.39	U	ND< 1.72	U	ND< 2.07	U	ND< 2.21	U	ND< 2.35	U	ND< 2.20	U	ND< 2.09	U	ND< 2.62	U	ND< 2.12	U
1,3,5-Trimethylbenzene (Mesitylene)	52000	ND< 2.08	U	ND< 1.77	U	ND< 2.83	U	ND< 2.39	U	ND< 1.72	U	ND< 2.07	U	ND< 2.21	U	ND< 2.35	U	ND< 2.20	U	ND< 2.09	U	ND< 2.62	U	ND< 2.12	U
1,3-Dichlorobenzene	49000	ND< 2.08	U	ND< 1.77	U	ND< 2.83	U	ND< 2.39	U	ND< 1.72	U	ND< 2.07	U	ND< 2.21	U	ND< 2.35	U	ND< 2.20	U	ND< 2.09	U	ND< 2.62	U	ND< 2.12	U
1,4-Dichlorobenzene	13000	ND< 2.08	U	ND< 1.77	U	ND< 2.83	U	ND< 2.39	U	ND< 1.72	U	ND< 2.07	U	ND< 2.21	U	ND< 2.35	U	ND< 2.20	U	ND< 2.09	U	ND< 2.62	U	ND< 2.12	U
1,4-Dioxane (P-Dioxane)	13000	ND< 20.8	U	ND< 17.7	U	ND< 28.3	U	ND< 23.9	U	ND< 17.2	U	ND< 20.7	U	ND< 22.1	U	ND< 23.5	U	ND< 22.0	U	ND< 20.9	U	ND< 26.2	U	ND< 21.2	U
2-Hexanone		ND< 5.19	U	ND< 4.42	U	ND< 7.08	U	ND< 5.97	U	ND< 4.31	U	ND< 5.18	U	ND< 5.51	U	ND< 5.87	U	ND< 5.51	U	ND< 5.23	U	ND< 6.54	U	ND< 5.29	U
Acetone	100000	20.4		12.7		ND< 14.2	U	ND< 11.9	U	21.6		23.8		62.8		29.8		65.3		ND< 10.5	U	7.02	J	ND< 10.6	U
Benzene	4800	ND< 2.08	U	ND< 1.77	U	ND< 2.83	U	ND< 2.39	U	ND< 1.72	U	ND< 2.07	U	ND< 2.21	U	ND< 2.35	U	ND< 2.20	U	ND< 2.09	U	ND< 2.62	U	ND< 2.12	U
Bromochloromethane		ND< 5.19	U	ND< 4.42	U	ND< 7.08	U	ND< 5.97	U	ND< 4.31	U	ND< 5.18	U	ND< 5.51	U	ND< 5.87	U	ND< 5.51	U	ND< 5.23	U	ND< 6.54	U	ND< 5.29	U
Bromodichloromethane		ND< 2.08	U	ND< 1.77	U	ND< 2.83	U	ND< 2.39	U	ND< 1.72	U	ND< 2.07	U	ND< 2.21	U	ND< 2.35	U	ND< 2.20	U	ND< 2.09	U	ND< 2.62	U	ND< 2.12	U
Bromoform		ND< 5.19	U	ND< 4.42	U	ND< 7.08	U	ND< 5.97	U	ND< 4.31	U	ND< 5.18	U	ND< 5.51	U	ND< 5.87	U	ND< 5.51	U	ND< 5.23	U	ND< 6.54	U	ND< 5.29	U
Bromomethane		ND< 2.08	U	ND< 1.77	U	ND< 2.83	U	ND< 2.39	U	ND< 1.72	U	ND< 2.07	U	ND< 2.21	U	ND< 2.35	U	ND< 2.20	U	ND< 2.09	U	ND< 2.62	U	ND< 2.12	U
Carbon Disulfide		ND< 2.08	U	ND< 1.77	U	ND< 2.83	U	ND< 2.39	U	ND< 1.72	U	ND< 2.07	U	1.26	J	ND< 2.35	U	ND< 2.20	U	ND< 2.09	U	ND< 2.62	U	ND< 2.12	U
Carbon Tetrachloride	2400	ND< 2.08	U	ND< 1.77	U	ND< 2.83	U	ND< 2.39	U	ND< 1.72	U	ND< 2.07	U	ND< 2.21	U	ND< 2.35	U	ND< 2.20	U	ND< 2.09	U	ND< 2.62	U	ND< 2.12	U
Chlorobenzene	100000	ND< 2.08	U	ND< 1.77	U	ND< 2.83	U	ND< 2.39	U	ND< 1.72	U	ND< 2.07	U	ND< 2.21	U	ND< 2.35	U	ND< 2.20	U	ND< 2.09	U	ND< 2.62	U	ND< 2.12	U
Chloroethane		ND< 2.08	U	ND< 1.77	U	ND< 2.83	U	ND< 2.39	U	ND< 1.72	U	ND< 2.07	U	ND< 2.21	U	ND< 2.35	U	ND< 2.20	U	ND< 2.09	U	ND< 2.62	U	ND< 2.12	U
Chloroform	49000	ND< 2.08	U	ND< 1.77	U	ND< 2.83	U	ND< 2.39	U	ND< 1.72	U	1.13	J	ND< 2.21	U	ND< 2.35	U	ND< 2.20	U	ND< 2.09	U	1.46	J	ND< 2.12	U
Chloromethane		ND< 2.08	U	1.71	J	ND< 2.83	U	ND< 2.39	U	ND< 1.72	U	3.67		1.92	J	ND< 2.35	U	ND< 2.20	U	ND< 2.09	U	ND< 2.62	U	ND< 2.12	U
Cis-1,2-Dichloroethylene	100000	ND< 2.08	U	ND< 1.77	U	ND< 2.83	U	ND< 2.39	U	ND< 1.72	U	ND< 2.07	U	ND< 2.21	U	ND< 2.35	U	ND< 2.20	U	ND< 2.09	U	ND< 2.62	U	ND< 2.12	U
Cis-1,3-Dichloropropene		ND< 2.08	U	ND< 1.77	U	ND< 2.83	U	ND< 2.39	U	ND< 1.72	U	ND< 2.07	U	ND< 2.21	U	ND< 2.35	U	ND< 2.20	U	ND< 2.09	U	ND< 2.62	U	ND< 2.12	U
Cyclohexane		ND< 10.4	U	ND< 8.84	U	ND< 14.2	U	ND< 11.9	U	ND< 8.61	U	ND< 10.4	U	ND< 11.0	U	ND< 11.7	U	ND< 11.0	U	ND< 10.5	U	ND< 13.1	U	ND< 10.6	U
Cymene		ND< 2.08	U	ND< 1.77	U	ND< 2.83	U	ND< 2.39	U	ND< 1.72	U	ND< 2.07	U	ND< 2.21	U	ND< 2.35	U	ND< 2.20	U	ND< 2.09	U	ND< 2.62	U	ND< 2.12	U
Dibromochloromethane		ND< 2.08	U	ND< 1.77	U	ND< 2.83	U	ND< 2.39	U	ND< 1.72	U	ND< 2.07	U	ND< 2.21	U	ND< 2.35	U	ND< 2.20	U	ND< 2.09	U	ND< 2.62	U	ND< 2.12	U
Dichlorodifluoromethane		ND< 2.08	U	ND< 1.77	U	ND< 2.83	U	ND< 2.39	U	ND< 1.72	U	ND< 2.07	U	ND< 2.21	U	ND< 2.35	U	ND< 2.20	U	ND< 2.09	U	ND< 2.62	U	ND< 2.12	U
Ethylbenzene	41000	ND< 2.08	U	ND< 1.77	U	ND< 2.83	U	ND< 2.39	U	ND< 1.72	U	ND< 2.07	U	ND< 2.21	U	ND< 2.35	U	ND< 2.20	U	ND< 2.09	U	ND< 2.62	U	ND< 2.12	U
Isopropylbenzene (Cumene)		ND< 2.08	U	ND< 1.77	U	ND< 2.83	U	ND< 2.39	U	ND< 1.72	U	ND< 2.07	U	ND< 2.21	U	ND< 2.35	U	ND< 2.20	U	ND< 2.09	U	ND< 2.62	U	ND< 2.12	U
Methyl Acetate		3.69		2.35		ND< 2.83	U	ND< 2.39	U	ND< 1.72	U	6.08		253	E	ND< 2.35	U	1.22	J	ND< 2.09	U	ND< 2.62	U	ND< 2.12	U
Methyl Ethyl Ketone (2-Butanone)	100000	ND< 10.4	U	ND< 8.84	U	ND< 14.2	U	ND< 11.9	U	ND< 8.61	U	ND< 10.4	U	9.85	J	ND< 11.7	U	10.8	J	ND< 10.5	U	ND< 13.1	U	ND< 10.6	U
Methyl Isobutyl Ketone (4-Methyl-2-Pentanone)		ND< 5.19	U	ND< 4.42	U	ND< 7.08	U	ND< 5.97	U	ND< 4.31	U	ND< 5.18	U	ND< 5.51	U	ND< 5.87	U	ND< 5.51	U	ND< 5.23	U	ND< 6.54	U	ND< 5.29	U
Methyl Tert-Butyl Ether (MTBE)	100000	ND< 2.08	U	ND< 1.77	U	ND< 2.83	U	ND< 2.39	U	ND< 1.72	U	ND< 2.07	U	ND< 2.21	U	ND< 2.35	U	ND< 2.20	U	ND< 2.09	U	ND< 2.62	U	ND< 2.12	U
Methylcyclohexane		ND< 2.08	U	ND< 1.77	U	ND< 2.83	U	ND< 2.39	U	ND< 1.72	U	ND< 2.07	U	ND< 2.21	U	ND< 2.35	U	ND< 2.20	U	ND< 2.09	U	ND< 2.62	U	ND< 2.12	U
Methylene Chloride	100000	ND< 5.19	U	ND< 4.42	U	ND< 7.08	U	ND< 5.97	U	ND< 4.31	U	ND< 5.18	U	ND< 5.51	U	ND< 5.87	U	ND< 5.51	U	ND< 5.23	U	ND< 6.54	U	ND< 5.29	U
M-P-Xylene		ND< 2.08	U	ND< 1.77	U	ND< 2.83	U	ND< 2.39	U	ND< 1.72	U	ND< 2.07	U	ND< 2.21	U	ND< 2.35	U	ND< 2.20	U	ND< 2.09	U	ND< 2.62	U	ND< 2.12	U
Naphthalene	100000	ND< 5.19	U	ND< 4.42	U	ND< 7.08	U	ND< 5.97	U	ND< 4.31	U	ND< 5.18	U	ND< 5.51	U	ND< 5.87	U	ND< 5.51	U	ND< 5.23	U	ND< 6.54	U	ND< 5.29	U
N-Butylbenzene	100000	ND< 2.08	U	ND< 1.77	U	ND< 2.83	U	ND< 2.39	U	ND< 1.72	U	ND< 2.07	U	ND< 2.21	U	ND< 2.35	U	ND< 2.20	U	ND< 2.09	U	ND< 2.62	U	ND< 2.12	U
N-Propylbenzene	100000	ND< 2.08	U	ND< 1.77	U	ND< 2.83	U	ND< 2.39	U	ND< 1.72	U	ND< 2.07	U	ND< 2.21	U	ND< 2.35	U	ND< 2.20	U	ND< 2.09	U	ND< 2.62	U	ND< 2.12	U
O-Xylene (1,2-Dimethylbenzene)		ND< 2.08	U	ND< 1.77	U	ND< 2.83	U	ND< 2.39	U	ND< 1.72	U	ND< 2.07	U	ND< 2.21	U	ND< 2.35	U	ND< 2.20	U	ND< 2.09	U	ND< 2.62	U	ND< 2.12	U
Sec-Butylbenzene	100000	ND< 2.08	U	ND< 1.77	U	ND< 2.83	U	ND< 2.39	U	ND< 1.72	U	ND< 2.07	U	ND< 2.21	U	ND< 2.35	U	ND< 2.20	U	ND< 2.09	U	ND< 2.62	U	ND< 2.12	U
Styrene		ND< 5.19	U	ND< 4.42	U	ND< 7.08	U	ND< 5.97	U	ND< 4.31	U	ND< 5.18	U	ND< 5.51	U	ND< 5.87	U	ND< 5.51	U	ND< 5.23	U	ND< 6.54	U	ND< 5.29	U
T-Butylbenzene	100000	ND< 2.08	U	ND< 1.77	U	ND< 2.83	U	ND< 2.39	U	ND< 1.72	U	ND< 2.07	U	ND< 2.21	U	ND< 2.35	U	ND< 2.20	U	ND< 2.09	U	ND< 2.62	U	ND< 2.12	U
Tetrachloroethylene (PCE)	19000	ND< 2.08	U	ND< 1.77	U	ND< 2.83	U	ND< 2.39	U	ND< 1.72	U	ND< 2.07	U	ND< 2.21	U	ND< 2.35	U	ND< 2.20	U	ND< 2.09	U	ND< 2.62	U	ND< 2.12	U
Toluene	100000	ND< 2.08	U	ND< 1.77	U	ND< 2.83	U	ND< 2.39	U	ND< 1.72	U	ND< 2.07	U	ND< 2.21	U	ND< 2.35	U	ND< 2.20	U	ND< 2.09	U	ND< 2.62	U	ND< 2.12	U
Trans-1,2-Dichloroethene	100000	ND< 2.08	U	ND< 1.77	U	ND< 2.83	U	ND< 2.39	U	ND< 1.72	U	ND< 2.07	U	ND< 2.21	U	ND< 2.35	U	ND< 2.20	U	ND< 2.09	U	ND< 2.62	U	ND< 2.12	U
Trans-1,3-Dichloropropene		ND< 2.08	U	ND< 1.77	U	ND< 2.83	U	ND< 2.39	U	ND< 1.72	U	ND< 2.07	U	ND< 2.21	U	ND< 2.35	U	ND< 2.20	U	ND< 2.09	U	ND< 2.62	U	ND< 2.12	U
Trichloroethylene (TCE)	21000	ND< 2.08	U	ND< 1.77	U	ND< 2.83	U	ND< 2.39	U	ND< 1.72	U	ND< 2.07	U	ND< 2.21	U	ND< 2.35	U	ND< 2.20	U	ND< 2.09	U	ND< 2.62	U	ND< 2.12	U
Trichlorofluoromethane		ND< 2.08	U	ND< 1.77	U	ND< 2.83	U	ND< 2.39	U	ND< 1.72	U	ND< 2.07	U	ND< 2.21	U	ND< 2.35	U	ND< 2.20	U	ND< 2.09	U	ND< 2.62	U	ND< 2.12	U
Vinyl Chloride	900	ND< 2.08	U	ND< 1.77	U	ND< 2.83	U	ND< 2.39	U	ND< 1.72	U	ND< 2.07	U	ND< 2.21	U	ND< 2.35	U	ND< 2.20	U	ND< 2.09	U	ND< 2.62	U	ND< 2.12	U

NOTES:

1. Soil sample analytical results are compared to the New York State Department of Environmental Conservation (NYSDEC) Title 6 of the official compilation of New York Codes, Rules, and Regulations (NYCRR) Part 375 Restricted Residential Soil Cleanup Objectives (RRSCOs).
2. RRSCO exceedances are in bold and highlighted yellow.
3. ND = Not Detected
4. Results shown as "ND" with Reporting Limits exceeding RRSCOs are in bold.
5. VOCs = Volatile Organic Compounds
6. µg/kg = micrograms per kilogram.
7. Qualifier (Q) definitions are provided in the official lab reports.

Table 3B – SVOCs in Soil – AOC-3

TABLE 3B: Semi-Volatile Organic Compounds (VOCs) in Soil
AOC-3 - Car Wash Area
Soil Sample Results (non-QA/QC)
Hudson River Psychiatric Center - North BCP Site, Poughkeepsie, NY
PVE Sheffler File #560909

	Date Sampled	5/12/2014		5/12/2014		12/4/2014		12/15/2014		5/12/2014		5/12/2014		5/13/2014		5/13/2014		5/13/2014		5/13/2014		5/13/2014		5/13/2014	
	Location	CW-2		CW-2		CW-3		CW-3		CW-3		CW-3		CW-4		CW-4		CW-5		CW-5		CW-6		CW-6	
	Sample ID	CW-2 3-4'		CW-2 19-20'		CW-3 (0-2 ")		CW-3 2-24"		CW-3 4-5.5'		CW-3 23-24'		CW-4 2-4		CW-4 15-16		CW-5 2-4.5		CW-5 15-16		CW-6 3-4.5		CW-6 7-8	
Analyte	RRSCOs	Result	Q	Result	Q	Result	Q	Result	Q	Result	Q	Result	Q	Result	Q	Result	Q	Result	Q	Result	Q	Result	Q	Result	Q
SVOCs (µg/kg)																									
1,2,4,5-Tetrachlorobenzene		ND< 312	U	ND< 305	U	ND< 386	U	ND< 327	U	ND< 334	U	ND< 320	U	ND< 301	U	ND< 304	U	ND< 310	U	ND< 298	U	ND< 300	U	ND< 306	U
1,2,4-Trichlorobenzene		ND< 312	U	ND< 305	U	ND< 386	U	ND< 327	U	ND< 334	U	ND< 320	U	ND< 301	U	ND< 304	U	ND< 310	U	ND< 298	U	ND< 300	U	ND< 306	U
1,2-Dichlorobenzene	100000	ND< 312	U	ND< 305	U	ND< 386	U	ND< 327	U	ND< 334	U	ND< 320	U	ND< 301	U	ND< 304	U	ND< 310	U	ND< 298	U	ND< 300	U	ND< 306	U
1,3-Dichlorobenzene	49000	ND< 312	U	ND< 305	U	ND< 386	U	ND< 327	U	ND< 334	U	ND< 320	U	ND< 301	U	ND< 304	U	ND< 310	U	ND< 298	U	ND< 300	U	ND< 306	U
1,4-Dichlorobenzene	13000	ND< 312	U	ND< 305	U	ND< 386	U	ND< 327	U	ND< 334	U	ND< 320	U	ND< 301	U	ND< 304	U	ND< 310	U	ND< 298	U	ND< 300	U	ND< 306	U
2,2-Oxybis(2-Chloropropane)		ND< 312	U	ND< 305	U	ND< 386	U	ND< 327	U	ND< 334	U	ND< 320	U	ND< 301	U	ND< 304	U	ND< 310	U	ND< 298	U	ND< 300	U	ND< 306	U
2,3,4,6-Tetrachlorophenol		ND< 312	U	ND< 305	U	ND< 386	U	ND< 327	U	ND< 334	U	ND< 320	U	ND< 301	U	ND< 304	U	ND< 310	U	ND< 298	U	ND< 300	U	ND< 306	U
2,4,5-Trichlorophenol		ND< 624	U	ND< 610	U	ND< 773	U	ND< 653	U	ND< 668	U	ND< 641	U	ND< 601	U	ND< 609	U	ND< 621	U	ND< 597	U	ND< 599	U	ND< 612	U
2,4,6-Trichlorophenol		ND< 312	U	ND< 305	U	ND< 386	U	ND< 327	U	ND< 334	U	ND< 320	U	ND< 301	U	ND< 304	U	ND< 310	U	ND< 298	U	ND< 300	U	ND< 306	U
2,4-Dichlorophenol		ND< 312	U	ND< 305	U	ND< 386	U	ND< 327	U	ND< 334	U	ND< 320	U	ND< 301	U	ND< 304	U	ND< 310	U	ND< 298	U	ND< 300	U	ND< 306	U
2,4-Dimethylphenol		ND< 312	U	ND< 305	U	ND< 386	U	ND< 327	U	ND< 334	U	ND< 320	U	ND< 301	U	ND< 304	U	ND< 310	U	ND< 298	U	ND< 300	U	ND< 306	U
2,4-Dinitrophenol		ND< 624	U	ND< 610	U	ND< 773	U	ND< 653	U	ND< 668	U	ND< 641	U	ND< 601	U	ND< 609	U	ND< 621	U	ND< 597	U	ND< 599	U	ND< 612	U
2,4-Dinitrotoluene		ND< 312	U	ND< 305	U	ND< 386	U	ND< 327	U	ND< 334	U	ND< 320	U	ND< 301	U	ND< 304	U	ND< 310	U	ND< 298	U	ND< 300	U	ND< 306	U
2,6-Dinitrotoluene		ND< 312	U	ND< 305	U	ND< 386	U	ND< 327	U	ND< 334	U	ND< 320	U	ND< 301	U	ND< 304	U	ND< 310	U	ND< 298	U	ND< 300	U	ND< 306	U
2-Chloronaphthalene		ND< 312	U	ND< 305	U	ND< 386	U	ND< 327	U	ND< 334	U	ND< 320	U	ND< 301	U	ND< 304	U	ND< 310	U	ND< 298	U	ND< 300	U	ND< 306	U
2-Chlorophenol		ND< 312	U	ND< 305	U	ND< 386	U	ND< 327	U	ND< 334	U	ND< 320	U	ND< 301	U	ND< 304	U	ND< 310	U	ND< 298	U	ND< 300	U	ND< 306	U
2-Methylnaphthalene		ND< 312	U	ND< 305	U	ND< 386	U	ND< 327	U	ND< 334	U	ND< 320	U	ND< 301	U	ND< 304	U	ND< 310	U	ND< 298	U	ND< 300	U	ND< 306	U
2-Methylphenol (O-Cresol)	100000	ND< 312	U	ND< 305	U	ND< 386	U	ND< 327	U	ND< 334	U	ND< 320	U	ND< 301	U	ND< 304	U	ND< 310	U	ND< 298	U	ND< 300	U	ND< 306	U
2-Nitroaniline		ND< 624	U	ND< 610	U	ND< 773	U	ND< 653	U	ND< 668	U	ND< 641	U	ND< 601	U	ND< 609	U	ND< 621	U	ND< 597	U	ND< 599	U	ND< 612	U
2-Nitrophenol		ND< 312	U	ND< 305	U	ND< 386	U	ND< 327	U	ND< 334	U	ND< 320	U	ND< 301	U	ND< 304	U	ND< 310	U	ND< 298	U	ND< 300	U	ND< 306	U
3,3'-Dichlorobenzidine		ND< 312	U	ND< 305	U	ND< 386	U	ND< 327	U	ND< 334	U	ND< 320	U	ND< 301	U	ND< 304	U	ND< 310	U	ND< 298	U	ND< 300	U	ND< 306	U
3-Methylphenol	100000	ND< 312	U	ND< 305	U	ND< 386	U	ND< 327	U	ND< 334	U	ND< 320	U	ND< 301	U	ND< 304	U	ND< 310	U	ND< 298	U	ND< 300	U	ND< 306	U
3-Nitroaniline		ND< 624	U	ND< 610	U	ND< 773	U	ND< 653	U	ND< 668	U	ND< 641	U	ND< 601	U	ND< 609	U	ND< 621	U	ND< 597	U	ND< 599	U	ND< 612	U
4,6-Dinitro-2-Methylphenol		ND< 624	U	ND< 610	U	ND< 773	U	ND< 653	U	ND< 668	U	ND< 641	U	ND< 601	U	ND< 609	U	ND< 621	U	ND< 597	U	ND< 599	U	ND< 612	U
4-Bromophenyl Phenyl Ether		ND< 312	U	ND< 305	U	ND< 386	U	ND< 327	U	ND< 334	U	ND< 320	U	ND< 301	U	ND< 304	U	ND< 310	U	ND< 298	U	ND< 300	U	ND< 306	U
4-Chloro-3-Methylphenol		ND< 312	U	ND< 305	U	ND< 386	U	ND< 327	U	ND< 334	U	ND< 320	U	ND< 301	U	ND< 304	U	ND< 310	U	ND< 298	U	ND< 300	U	ND< 306	U
4-Chloroaniline		ND< 312	U	ND< 305	U	ND< 386	U	ND< 327	U	ND< 334	U	ND< 320	U	ND< 301	U	ND< 304	U	ND< 310	U	ND< 298	U	ND< 300	U	ND< 306	U
4-Chlorophenyl Phenyl Ether		ND< 312	U	ND< 305	U	ND< 386	U	ND< 327	U	ND< 334	U	ND< 320	U	ND< 301	U	ND< 304	U	ND< 310	U	ND< 298	U	ND< 300	U	ND< 306	U
4-Nitroaniline		ND< 624	U	ND< 610	U	ND< 773	U	ND< 653	U	ND< 668	U	ND< 641	U	ND< 601	U	ND< 609	U	ND< 621	U	ND< 597	U	ND< 599	U	ND< 612	U
4-Nitrophenol		ND< 624	U	ND< 610	U	ND< 773	U	ND< 653	U	ND< 668	U	ND< 641	U	ND< 601	U	ND< 609	U	ND< 621	U	ND< 597	U	ND< 599	U	ND< 612	U
Acenaphthene	100000	ND< 312	U	ND< 305	U	ND< 386	U	ND< 327	U	ND< 334	U	ND< 320	U	ND< 301	U	ND< 304	U	ND< 310	U	ND< 298	U	ND< 300	U	ND< 306	U
Acenaphthylene	100000	ND< 312	U	ND< 305	U	ND< 386	U	ND< 327	U	ND< 334	U	ND< 320	U	ND< 301	U	ND< 304	U	ND< 310	U	ND< 298	U	ND< 300	U	ND< 306	U
Acetophenone		ND< 312	U	ND< 305	U	ND< 386	U	ND< 327	U	ND< 334	U	ND< 320	U	ND< 301	U	ND< 304	U	ND< 310	U	ND< 298	U	ND< 300	U	ND< 306	U
Anthracene	100000	ND< 312	U	ND< 305	U	ND< 386	U	ND< 327	U	ND< 334	U	ND< 320	U	ND< 301	U	ND< 304	U	ND< 310	U	ND< 298	U	ND< 300	U	ND< 306	U
Atrazine		ND< 312	U	ND< 305	U	ND< 386	U	ND< 327	U	ND< 334	U	ND< 320	U	ND< 301	U	ND< 304	U	ND< 310	U	ND< 298	U	ND< 300	U	ND< 306	U
Benzaldehyde		ND< 312	U	ND< 305	U	ND< 386	U	ND< 327	U	ND< 334	U	ND< 320	U	ND< 301	U	ND< 304	U	ND< 310	U	ND< 298	U	ND< 300	U	ND< 306	U
Benzo(A)Anthracene	1000	ND< 312	U	ND< 305	U	201	J	ND< 327	U	ND< 334	U	ND< 320	U	ND< 301	U	ND< 304	U	ND< 310	U	ND< 298	U	ND< 300	U	ND< 306	U
Benzo(A)Pyrene	1000	ND< 312	U	ND< 305	U	195	J	ND< 327	U	ND< 334	U	ND< 320	U	ND< 301	U	ND< 304	U	ND< 310	U	ND< 298	U	ND< 300	U	ND< 306	U
Benzo(B)Fluoranthene	1000	ND< 312	U	ND< 305	U	ND< 386	U	ND< 327	U	ND< 334	U	ND< 320	U	ND< 301	U	ND< 304	U	ND< 310	U	ND< 298	U	ND< 300	U	ND< 306	U
Benzo(G,H,I)Perylene	100000	ND< 312	U	ND< 305	U	ND< 386	U	ND< 327	U	ND< 334	U	ND< 320	U	ND< 301	U	ND< 304	U	ND< 310	U	ND< 298	U	ND< 300	U	ND< 306	U
Benzo(K)Fluoranthene	3900	ND< 312	U	ND< 305	U	ND< 386	U	ND< 327	U	ND< 334	U	ND< 320	U	ND< 301	U	ND< 304	U	ND< 310	U	ND< 298	U	ND< 300	U	ND< 306	U
Benzyl Butyl Phthalate		ND< 312	U	ND< 305	U	ND< 386	U	ND< 327	U	ND< 334	U	ND< 320	U	ND< 301	U	ND< 304	U	ND< 310	U	ND< 298	U	ND< 300	U	ND< 306	U
Biphenyl (Diphenyl)		ND< 312	U	ND< 305	U	ND< 386	U	ND< 327	U	ND< 334	U	ND< 320	U	ND< 301	U	ND< 304	U	ND< 310	U	ND< 298	U	ND< 300	U	ND< 306	U
Bis(2-Chloroethoxy) Methane		ND< 312	U	ND< 305	U	ND< 386	U	ND< 327	U	ND< 334	U	ND< 320	U	ND< 301	U	ND< 304	U	ND< 310	U	ND< 298	U	ND< 300	U	ND< 306	U
Bis(2-Chloroethyl) Ether (2-Chloroethyl Ether)		ND< 312	U	ND< 305	U	ND< 386	U	ND< 327	U	ND< 334	U	ND< 320	U	ND< 301	U	ND< 304	U	ND< 310	U	ND< 298	U	ND< 300	U	ND< 306	U
Bis(2-Ethylhexyl) Phthalate		ND< 312	U	ND< 305	U	ND< 386	U	ND< 327	U	ND< 334	U	ND< 320	U	ND< 301	U	ND< 304	U	ND< 310	U	ND< 298	U	ND< 300	U	ND< 306	U
Caprolactam		ND< 312	U	ND< 305	U	ND< 386	U	ND< 327	U	ND< 334	U	ND< 320	U	ND< 301	U	ND< 304	U	ND< 310	U	ND< 298	U	ND< 300	U	ND< 306	U
Carbazole		ND< 312	U	ND< 305	U	ND< 386	U	ND< 327	U	ND< 334	U	ND< 320	U	ND< 301	U	ND< 304	U	ND< 310	U	ND< 298	U	ND< 300	U	ND< 306	U
Chrysene	3900	ND< 312	U	ND< 305	U	230	J	ND< 327	U	ND< 334	U	ND< 320	U	ND< 301	U	ND< 304	U	ND< 310	U	ND< 298	U	ND< 300	U	ND< 306	U
Dibenz(A,H)Anthracene	**330**	ND< 312	U	ND< 305	U	**ND< 386**	**U**	ND< 327	U	**ND< 334**	**U**	ND< 320	U	ND< 301	U	ND< 304	U	ND< 310	U	ND< 298	U	ND< 300	U	ND< 306	U
Dibenzofuran	59000	ND< 312	U	ND< 305	U	ND< 386	U	ND< 327	U	ND< 334	U	ND< 320	U	ND< 301	U	ND< 304	U	ND< 310	U	ND< 298	U	ND< 300	U	ND< 306	U
Diethyl Phthalate		ND< 312	U	ND< 305	U	ND< 386	U	ND< 327	U	ND< 334	U	ND< 320	U	ND< 301	U	ND< 304	U	ND< 310	U	ND< 298	U	ND< 300	U	ND< 306	U
Dimethyl Phthalate		ND< 624	U	ND< 610	U	ND< 773	U	ND< 653	U	ND< 668	U	ND< 641	U	ND< 601	U	ND< 609	U	ND< 621	U	ND< 597	U	ND< 599	U	ND< 612	U
Di-N-Butyl Phthalate		ND< 312	U	ND< 305	U	ND< 386	U	ND< 327	U	ND< 334	U	ND< 320	U	ND< 301	U	ND< 304	U	ND< 310	U	ND< 298	U	ND< 300	U	ND< 306	U
Di-N-Octylphthalate		ND< 312	U	ND< 305	U	ND< 386	U	ND< 327	U	ND< 334	U	ND< 320	U	ND< 301	U	ND< 304	U	ND< 310	U	ND< 298	U	ND< 300	U	ND< 306	U
Fluoranthene	100000	ND< 312	U	ND< 305	U	340	J	ND< 327	U	ND< 334	U	ND< 320	U	ND< 301	U	ND< 304	U	ND< 310	U	ND< 298	U	ND< 300	U	ND< 306	U
Fluorene	100000	ND< 312	U	ND< 305	U	ND< 386	U	ND< 327	U	ND< 334	U	ND< 320	U	ND< 301	U	ND< 304	U	ND< 310	U	ND< 298	U	ND< 300	U	ND< 306	U
Hexachlorobenzene	1200	ND< 312	U	ND< 305	U	ND< 386	U	ND< 327	U	ND< 334	U	ND< 320	U	ND< 301	U	ND< 304	U	ND< 310	U	ND< 298	U	ND< 300	U	ND< 306	U
Hexachlorobutadiene		ND< 312	U	ND< 305	U	ND< 386	U	ND< 327	U	ND< 334	U	ND< 320	U	ND< 301	U	ND< 304	U	ND< 310	U	ND< 298	U	ND< 300	U	ND< 306	U
Hexachlorocyclopentadiene		ND< 312	U	ND< 305	U	ND< 386	U	ND< 327	U	ND< 334	U	ND< 320	U	ND< 301	U	ND< 304	U	ND< 310	U	ND< 298	U	ND< 300	U	ND< 306	U
Hexachloroethane		ND< 312	U	ND< 305	U	ND< 386	U	ND< 327	U	ND< 334	U	ND< 320	U	ND< 301	U	ND< 304	U	ND< 310	U	ND< 298	U	ND< 300	U	ND< 306	U
Indeno(1,2,3-C,D)Pyrene	500	ND< 312	U	ND< 305	U	ND< 386	U	ND< 327	U	ND< 334	U	ND< 320	U	ND< 301	U	ND< 304	U	ND< 310	U	ND< 298	U	ND< 300	U	ND< 306	U
Isophorone		ND< 312	U	ND< 305	U	ND< 386	U	ND< 327	U	ND< 334	U	ND< 320	U	ND< 301	U	ND< 304	U	ND< 310	U	ND< 298	U	ND< 300	U	ND< 306	U
Naphthalene	100000	ND< 312	U	ND< 305	U	ND< 386	U	ND< 327	U	ND< 334	U	ND< 320	U	ND< 301	U	ND< 304	U	ND< 310	U	ND< 298	U	ND< 300	U	ND< 306	U
Nitrobenzene		ND< 312	U	ND< 305	U	ND< 386	U	ND< 327	U	ND< 334	U	ND< 320	U	ND< 301	U	ND< 304	U	ND< 310	U	ND< 298	U	ND< 300	U	ND< 306	U
N-Nitrosodi-N-Propylamine		ND< 312	U	ND< 305	U	ND< 386	U	ND< 327	U	ND< 334	U	ND< 320	U	ND< 301	U	ND< 304	U	ND< 310	U	ND< 298	U	ND< 300	U	ND< 306	U
N-Nitrosodiphenylamine		ND< 312	U	ND< 305	U	ND< 386	U	ND< 327	U	ND< 334	U	ND< 320	U	ND< 301	U	ND< 304	U	ND< 310	U	ND< 298	U	ND< 300	U	ND< 306	U
Pentachlorophenol	6700	ND< 624	U	ND< 610	U	ND< 773	U	ND< 653	U	ND< 668	U	ND< 641	U	ND< 601	U	ND< 609	U	ND< 621	U	ND< 597	U	ND< 599	U	ND< 612	U
Phenanthrene	100000	ND< 312	U	ND< 305	U	ND< 386	U	ND< 327	U	ND< 334	U	ND< 320	U	ND< 301	U	ND< 304	U	ND< 310	U	ND< 298	U	ND< 300	U	ND< 306	U
Phenol	100000	ND< 312	U	ND< 305	U	ND< 386	U	ND< 327	U	ND< 334	U	ND< 320	U	ND< 301	U	ND< 304	U	ND< 310	U	ND< 298	U	ND< 300	U	ND< 306	U
Pyrene	100000	ND< 312	U	ND< 305	U	335	J	ND< 327	U	ND< 334	U	ND< 320	U	ND< 301	U	ND< 304	U	ND< 310	U	ND< 298	U	ND< 300	U	ND< 306	U

NOTES:

1. Soil sample analytical results are compared to the New York State Department of Environmental Conservation (NYSDEC) Title 6 of the official compilation of New York Codes, Rules, and Regulations (NYCRR) Part 375 Restricted Residential Soil Cleanup Objectives (RRSCOs).
2. RRSCO exceedances are in bold and highlighted yellow.
3. ND = Not Detected
4. Results shown as "ND" with Reporting Limits exceeding RRSCOs are in bold.
5. SVOCs = Semi-Volatile Organic Compounds
6. µg/kg = micrograms per kilogram.
7. Qualifier (Q) definitions are provided in the official lab reports.

Table 3C – Total Metals in Soil – AOC-3

TABLE 3C: Total Metals in Soil

AOC-3 - Car Wash Area

Soil Sample Results (non-QA/QC)

Hudson River Psychiatric Center - North BCP Site, Poughkeepsie, NY

PVE Sheffler File #560909

	Date Sampled	5/12/2014		5/12/2014		12/4/2014		12/15/2014		5/12/2014		5/12/2014		5/13/2014		5/13/2014	
	Location	CW-2		CW-2		CW-3		CW-3		CW-3		CW-3		CW-4		CW-4	
	Sample ID	CW-2 3-4'		CW-2 19-20'		CW-3 (0-2 ")		CW-3 2-24"		CW-3 4-5.5'		CW-3 23-24'		CW-4 2-4		CW-4 15-16	
Analyte	RRSCOs	Result	Q	Result	Q	Result	Q	Result	Q	Result	Q	Result	Q	Result	Q	Result	Q
Metals (mg/kg)																	
Aluminum		14800		10200						15100		13500		12300		10700	
Antimony		ND< 7.88	U	ND< 7.15	U					ND< 6.91	U	ND< 6.67	U	ND< 6.84	U	ND< 6.33	U
Arsenic	16	6.21		3.64		7.66		6.76		6.18		5.36		5.03		4.95	
Barium	400	41.0		20.7		59.5		49.5		42.0		26.5		42.6		23.8	
Beryllium	72	0.470	J	0.355	J	0.535	J	0.514	J	0.538	J	0.537	J	0.464		0.402	
Cadmium	4.3	ND< 0.656	U	ND< 0.596	U	ND< 0.686	U	ND< 0.585	U	ND< 0.576	U	ND< 0.556	U	ND< 0.570	U	ND< 0.527	U
Calcium		885		1240						904		1490		6230		1380	
Chromium, Hexavalent	110	ND< 1.2	U	ND< 1.1	U	ND< 1.4	U	ND< 1.2	U	ND< 1.1	U	ND< 1.2	U	ND< 1.1	U	ND< 1.1	U
Chromium, Total		16.8		13.1		15.9		15.8		16.1		18.4		14.2		13.6	
Cobalt		10.4		7.61						11.9		11.5		8.97		9.90	
Copper	270	26.8		21.6		33.1		29.2		28.4		29.5		23.4		37.3	
Cyanide	27	ND< 0.58	U	ND< 0.56	U					ND< 0.57	U	ND< 0.58	U	ND< 0.53	U	ND< 0.55	U
Cyanide	27					ND< 0.676	U	ND< 0.351	U								
Iron		25700		22100						26100		29200		22400		23900	
Lead	400	10.8		9.18		166		76.9		11.1		12.7		20.7		10.2	
Magnesium		5010		5340						5010		7360		4720		5080	
Manganese	2000	587		529		638	M	721		753		729		647		768	
Mercury	0.81	0.0292		0.0186	J	0.224		0.0636		0.0286		0.0286		0.0597		0.0384	
Nickel	310	22.4		20.7		22.8		22.7		22.4		28.8		20.2		20.7	
Potassium		1100		662						1180		976		896		741	
Selenium	180	ND< 1.31	U	ND< 1.19	U	ND< 1.37	U	ND< 1.17	U	ND< 1.15	U	ND< 1.11	U	ND< 1.14	U	ND< 1.05	U
Silver	180	ND< 1.31	U	ND< 1.19	U	ND< 1.37	U	ND< 1.17	U	ND< 1.15	U	ND< 1.11	U	ND< 1.14	U	ND< 1.05	U
Sodium		ND< 328	U	ND< 298	U					ND< 288	U	ND< 278	U	ND< 285	U	ND< 264	U
Thallium		ND< 3.28	U	ND< 2.98	U					ND< 2.88	U	ND< 2.78	U	1.45		1.33	
Vanadium		19.2		10.6						19.5		13.8		14.4		11.6	
Zinc	10000	66.0		65.8		101		78.7		68.0		107		69.4		78.1	

NOTES:

1. Soil sample analytical results are compared to the New York State Department of Environmental Conservation (NYSDEC) Title 6 of the official compilation of New York Codes, Rules, and Regulations (NYCRR) Part 375 Restricted Residential Soil Cleanup Objectives (RRSCOs).
2. RRSCO exceedances are in bold and highlighted yellow.
3. ND = Not Detected
4. Results shown as "ND" with Reporting Limits exceeding RRSCOs are in bold.
5. mg/kg = milligrams per kilogram.
6. Qualifier (Q) definitions are provided in the official lab reports.

TABLE 3C: Total Metals in Soil

AOC-3 - Car Wash Area

Soil Sample Results (non-QA/QC)

Hudson River Psychiatric Center - North BCP Site, Poughkeepsie, NY

PVE Sheffler File #560909

	Date Sampled	5/13/2014		5/13/2014		5/13/2014		5/13/2014	
	Location	CW-5		CW-5		CW-6		CW-6	
	Sample ID	CW-5 2-4.5		CW-5 15-16		CW-6 3-4.5		CW-6 7-8	
Analyte	RRSCOs	Result	Q	Result	Q	Result	Q	Result	Q
Metals (mg/kg)									
Aluminum		10800		14500		3830		19200	
Antimony		ND< 6.57	U	ND< 6.53	U	ND< 6.85	U	ND< 7.32	U
Arsenic	16	5.15		6.08		2.16		6.02	
Barium	400	43.7		31.0	D	25.9		47.5	
Beryllium	72	0.442		0.517		ND< 0.571	U	0.625	
Cadmium	4.3	ND< 0.548	U	ND< 0.544	U	ND< 0.571	U	ND< 0.610	U
Calcium		3370	M	1440	M	4290		457	
Chromium, Hexavalent	110	ND< 1.1	U	ND< 1.1	U	ND< 1.0	U	ND< 1.1	U
Chromium, Total		14.2		16.0		7.85		20.1	
Cobalt		8.82		12.6		13.8		12.9	
Copper	270	25.6		34.3	D	49.6		36.5	
Cyanide	27	ND< 0.54	U	ND< 0.55	U	1.30		ND< 0.55	U
Cyanide	27								
Iron		20500		32400		8350		35600	
Lead	400	34.1	D	12.6		30.6		19.3	
Magnesium		4030	M	7150	DM	1720		7510	
Manganese	2000	611	M	747	D	200		912	
Mercury	0.81	0.0444	D	0.0307		0.0580		0.0781	
Nickel	310	20.7		29.3		12.6		28.9	
Potassium		856		1110		515		1050	
Selenium	180	ND< 1.10	U	ND< 1.09	U	ND< 1.14	U	ND< 1.22	U
Silver	180	ND< 1.10	U	ND< 1.09	U	ND< 1.14	U	ND< 1.22	U
Sodium		ND< 274	U	ND< 272	U	ND< 285	U	ND< 305	U
Thallium		ND< 2.74	U	ND< 2.72	U	ND< 2.85	U	1.68	
Vanadium		14.6		14.9		10.2		21.0	
Zinc	10000	76.3		89.8		21.5		104	

NOTES:

1. Soil sample analytical results are compared to the New York State Department of Environmental Conservation (NYSDEC) Title 6 of the official compilation of New York Codes, Rules, and Regulations (NYCRR) Part 375 Restricted Residential Soil Cleanup Objectives (RRSCOs).
2. RRSCO exceedances are in bold and highlighted yellow.
3. ND = Not Detected
4. Results shown as "ND" with Reporting Limits exceeding RRSCOs are in bold.
5. mg/kg = milligrams per kilogram.
6. Qualifier (Q) definitions are provided in the official lab reports.

Table 3D – Pesticides, Herbicides, and PCBs in Soil – AOC-3

TABLE 3D: Pesticides, Herbicides, and PCBs in Soil

AOC-3 - Car Wash Area

Soil Sample Results (non-QA/QC)

Hudson River Psychiatric Center - North BCP Site, Poughkeepsie, NY

PVE Sheffler File #560909

	Date Sampled	5/12/2014		5/12/2014		12/4/2014		12/15/2014		5/13/2014		5/13/2014	
	Location	CW-2		CW-2		CW-3		CW-3		CW-4		CW-4	
	Sample ID	CW-2 3-4'		CW-2 19-20'		CW-3 (0-2 ")		CW-3 2-24"		CW-4 2-4		CW-4 15-16	
Analyte	RRSCOs	Result	Q	Result	Q	Result	Q	Result	Q	Result	Q	Result	Q
Pesticides (µg/kg)													
Aldrin	97	ND< 3.47	U	ND< 3.18	U	ND< 3.90	U	ND< 3.33	U	ND< 3.06	U	ND< 3.14	U
Alpha Bhc (Alpha Hexachlorocyclohexane)	480	ND< 3.47	U	ND< 3.18	U	ND< 3.90	U	ND< 3.33	U	ND< 3.06	U	7.49	
Alpha Chlordane	4200	ND< 3.47	U	ND< 3.18	U	2.61	JP	2.28	JP	ND< 3.06	U	ND< 3.14	U
Alpha Endosulfan	24000	ND< 3.47	U	ND< 3.18	U	ND< 3.90	U	ND< 3.33	U	ND< 3.06	U	ND< 3.14	U
Beta Bhc (Beta Hexachlorocyclohexane)	360	ND< 3.47	U	ND< 3.18	U	ND< 3.90	U	ND< 3.33	U	ND< 3.06	U	ND< 3.14	U
Beta Endosulfan	24000	ND< 3.47	U	ND< 3.18	U	ND< 3.90	U	ND< 3.33	U	ND< 3.06	U	ND< 3.14	U
Delta BHC (Delta Hexachlorocyclohexane)	100000	ND< 3.47	U	ND< 3.18	U	ND< 3.90	U	ND< 3.33	U	ND< 3.06	U	ND< 3.14	U
Dieldrin	200	ND< 3.47	U	ND< 3.18	U	ND< 3.90	U	ND< 3.33	U	ND< 3.06	U	ND< 3.14	U
Endosulfan Sulfate	24000	ND< 3.47	U	ND< 3.18	U	ND< 3.90	U	ND< 3.33	U	ND< 3.06	U	ND< 3.14	U
Endrin	11000	ND< 3.47	U	ND< 3.18	U	ND< 3.90	U	ND< 3.33	U	ND< 3.06	U	ND< 3.14	U
Endrin Aldehyde		ND< 3.47	U	ND< 3.18	U	ND< 3.90	U	ND< 3.33	U	ND< 3.06	U	ND< 3.14	U
Endrin Ketone		ND< 3.47	U	ND< 3.18	U	ND< 3.90	U	1.91	JP	ND< 3.06	U	ND< 3.14	U
Gamma Bhc (Lindane)	1300	ND< 3.47	U	ND< 3.18	U	ND< 3.90	U	ND< 3.33	U	ND< 3.06	U	ND< 3.14	U
Gamma Chlordane		ND< 3.47	U	ND< 3.18	U	ND< 3.90	U	ND< 3.33	U	ND< 3.06	U	ND< 3.14	U
Heptachlor	2100	ND< 3.47	U	ND< 3.18	U	ND< 3.90	U	ND< 3.33	U	ND< 3.06	U	ND< 3.14	U
Heptachlor Epoxide		ND< 3.47	U	ND< 3.18	U	ND< 3.90	U	ND< 3.33	U	ND< 3.06	U	ND< 3.14	U
Methoxychlor		ND< 3.47	U	ND< 3.18	U	4.29		ND< 3.33	U	ND< 3.06	U	ND< 3.14	U
P,P'-DDD	13000	ND< 3.47	U	ND< 3.18	U	ND< 3.90	U	ND< 3.33	U	ND< 3.06	U	ND< 3.14	U
P,P'-DDE	8900	ND< 3.47	U	ND< 3.18	U	ND< 3.90	U	ND< 3.33	U	ND< 3.06	U	ND< 3.14	U
P,P'-DDT	7900	ND< 3.47	U	ND< 3.18	U	ND< 3.90	U	2.80	J	ND< 3.06	U	ND< 3.14	U
Toxaphene		ND< 34.7	U	ND< 31.8	U	ND< 39.0	U	ND< 33.3	U	ND< 30.6	U	ND< 31.4	U
Herbicides (µg/kg)													
Silvex (2,4,5-TP)	100000	ND< 14	U	ND< 13	U	ND< 17	U	ND< 14	U	ND< 13	U	ND< 13	U
PCBs (mg/kg)													
PCB-1016 (Aroclor 1016)		ND< 0.0347	U	ND< 0.0318	U	ND< 0.0390	U	ND< 0.0333	U	ND< 0.0306	U	ND< 0.0314	U
PCB-1221 (Aroclor 1221)		ND< 0.0347	U	ND< 0.0318	U	ND< 0.0390	U	ND< 0.0333	U	ND< 0.0306	U	ND< 0.0314	U
PCB-1232 (Aroclor 1232)		ND< 0.0347	U	ND< 0.0318	U	ND< 0.0390	U	ND< 0.0333	U	ND< 0.0306	U	ND< 0.0314	U
PCB-1242 (Aroclor 1242)		ND< 0.0347	U	ND< 0.0318	U	ND< 0.0390	U	ND< 0.0333	U	ND< 0.0306	U	ND< 0.0314	U
PCB-1248 (Aroclor 1248)		ND< 0.0347	U	ND< 0.0318	U	ND< 0.0390	U	ND< 0.0333	U	ND< 0.0306	U	ND< 0.0314	U
PCB-1254 (Aroclor 1254)		ND< 0.0347	U	ND< 0.0318	U	ND< 0.0390	U	ND< 0.0333	U	ND< 0.0306	U	ND< 0.0314	U
PCB-1260 (Aroclor 1260)		ND< 0.0347	U	ND< 0.0318	U	ND< 0.0390	U	ND< 0.0333	U	ND< 0.0306	U	ND< 0.0314	U
PCB-1262 (Aroclor 1262)		ND< 0.0347	U	ND< 0.0318	U	ND< 0.0390	U	ND< 0.0333	U	ND< 0.0306	U	ND< 0.0314	U
PCB-1268 (Aroclor 1268)		ND< 0.0347	U	ND< 0.0318	U	ND< 0.0390	U	ND< 0.0333	U	ND< 0.0306	U	ND< 0.0314	U

NOTES:

1. Soil sample analytical results are compared to the New York State Department of Environmental Conservation (NYSDEC) Title 6 of the official compilation of New York Codes, Rules, and Regulations (NYCRR) Part 375 Restricted Residential Soil Cleanup Objectives (RRSCOs).
2. RRSCO exceedances are in bold and highlighted yellow.
3. ND = Not Detected
4. Results shown as "ND" with Reporting Limits exceeding RRSCOs are in bold.
5. PCBs = Polychlorinated Biphenyls
6. µg/kg = micrograms per kilogram.
7. mg/kg = milligrams per kilogram.
8. Qualifier (Q) definitions are provided in the official lab reports.

Table 4A – VOCs in Soil – AOC-4

TABLE 4A: Volatile Organic Compounds (VOCs) in Soil
AOC-4 - Fire Station Fuel Storage and Dispensing Area
Soil Sample Results (non-QA/QC)
Hudson River Psychiatric Center - North BCP Site, Poughkeepsie, NY
PVE Sheffler File #560909

	Date Sampled	5/15/2014		5/15/2014		11/24/2014		12/15/2014		5/15/2014		5/15/2014		12/16/2014		12/16/2014		5/15/2014		11/24/2014		12/15/2014	
	Location	FS-1		FS-1		FS-2		FS-2		FS-2		FS-2		FS-3		FS-3		FS-3		FS-SS-1		FS-SS-1	
	Sample ID	FS-1 2-4'		FS-1 19-20'		FS-2 (0-2")		FS-2 2-24"		FS-2 2-3'		FS-2 6.5-8'		FS-3 0-2"		FS-3 2-24"		FS-3 1.5-3'		FS-SS-1 (0-2")		FS-SS-1 2-24"	
Analyte	RRSCOs	Result	Q	Result	Q	Result	Q	Result	Q	Result	Q	Result	Q	Result	Q	Result	Q	Result	Q	Result	Q	Result	Q
VOCs (µg/kg)																							
1,1,1-Trichloroethane	100000	ND< 2.99	U	ND< 2.00	U	ND< 2.89	U	ND< 2.45	U	ND< 1.90	U	ND< 1.90	U	ND< 3.32	U	ND< 2.52	U	ND< 3.01	U	ND< 2.44	U	ND< 2.87	U
1,1,2,2-Tetrachloroethane		ND< 2.99	U	ND< 2.00	U	ND< 2.89	U	ND< 2.45	U	ND< 1.90	U	ND< 1.90	U	ND< 3.32	U	ND< 2.52	U	ND< 3.01	U	ND< 2.44	U	ND< 2.87	U
1,1,2-Trichloro-1,2,2-Trifluoroethane		ND< 2.99	U	ND< 2.00	U	ND< 2.89	U	ND< 2.45	U	ND< 1.90	U	ND< 1.90	U	ND< 3.32	U	ND< 2.52	U	ND< 3.01	U	ND< 2.44	U	ND< 2.87	U
1,1,2-Trichloroethane		ND< 2.99	U	ND< 2.00	U	ND< 2.89	U	ND< 2.45	U	ND< 1.90	U	ND< 1.90	U	ND< 3.32	U	ND< 2.52	U	ND< 3.01	U	ND< 2.44	U	ND< 2.87	U
1,1-Dichloroethane	26000	ND< 2.99	U	ND< 2.00	U	ND< 2.89	U	ND< 2.45	U	ND< 1.90	U	ND< 1.90	U	ND< 3.32	U	ND< 2.52	U	ND< 3.01	U	ND< 2.44	U	ND< 2.87	U
1,1-Dichloroethene	100000	ND< 2.99	U	ND< 2.00	U	ND< 2.89	U	ND< 2.45	U	ND< 1.90	U	ND< 1.90	U	ND< 3.32	U	ND< 2.52	U	ND< 3.01	U	ND< 2.44	U	ND< 2.87	U
1,2,3-Trichlorobenzene		ND< 7.47	U	ND< 5.01	U	ND< 7.21	U	ND< 6.11	U	ND< 4.75	U	ND< 4.75	U	ND< 8.30	U	ND< 6.30	U	ND< 7.54	U	ND< 6.09	U	ND< 7.19	U
1,2,4-Trichlorobenzene		ND< 7.47	U	ND< 5.01	U	ND< 7.21	U	ND< 6.11	U	ND< 4.75	U	ND< 4.75	U	ND< 8.30	U	ND< 6.30	U	ND< 7.54	U	ND< 6.09	U	ND< 7.19	U
1,2,4-Trimethylbenzene	52000	ND< 2.99	U	ND< 2.00	U	ND< 2.89	U	ND< 2.45	U	ND< 1.90	U	ND< 1.90	U	ND< 3.32	U	ND< 2.52	U	ND< 3.01	U	ND< 2.44	U	ND< 2.87	U
1,2-Dibromo-3-Chloropropane		ND< 14.9	U	ND< 10.0	U	ND< 14.4	U	ND< 12.2	U	ND< 9.49	U	ND< 9.49	U	ND< 16.6	U	ND< 12.6	U	ND< 15.1	U	ND< 12.2	U	ND< 14.4	U
1,2-Dibromoethane (Ethylene Dibromide)		ND< 2.99	U	ND< 2.00	U	ND< 2.89	U	ND< 2.45	U	ND< 1.90	U	ND< 1.90	U	ND< 3.32	U	ND< 2.52	U	ND< 3.01	U	ND< 2.44	U	ND< 2.87	U
1,2-Dichlorobenzene	100000	ND< 2.99	U	ND< 2.00	U	ND< 2.89	U	ND< 2.45	U	ND< 1.90	U	ND< 1.90	U	ND< 3.32	U	ND< 2.52	U	ND< 3.01	U	ND< 2.44	U	ND< 2.87	U
1,2-Dichloroethane	3100	ND< 2.99	U	ND< 2.00	U	ND< 2.89	U	ND< 2.45	U	ND< 1.90	U	ND< 1.90	U	ND< 3.32	U	ND< 2.52	U	ND< 3.01	U	ND< 2.44	U	ND< 2.87	U
1,2-Dichloropropane		ND< 2.99	U	ND< 2.00	U	ND< 2.89	U	ND< 2.45	U	ND< 1.90	U	ND< 1.90	U	ND< 3.32	U	ND< 2.52	U	ND< 3.01	U	ND< 2.44	U	ND< 2.87	U
1,3,5-Trimethylbenzene (Mesitylene)	52000	ND< 2.99	U	ND< 2.00	U	ND< 2.89	U	ND< 2.45	U	ND< 1.90	U	ND< 1.90	U	ND< 3.32	U	ND< 2.52	U	ND< 3.01	U	ND< 2.44	U	ND< 2.87	U
1,3-Dichlorobenzene	49000	ND< 2.99	U	ND< 2.00	U	ND< 2.89	U	ND< 2.45	U	ND< 1.90	U	ND< 1.90	U	ND< 3.32	U	ND< 2.52	U	ND< 3.01	U	ND< 2.44	U	ND< 2.87	U
1,4-Dichlorobenzene	13000	ND< 2.99	U	ND< 2.00	U	ND< 2.89	U	ND< 2.45	U	ND< 1.90	U	ND< 1.90	U	ND< 3.32	U	ND< 2.52	U	ND< 3.01	U	ND< 2.44	U	ND< 2.87	U
1,4-Dioxane (P-Dioxane)	13000	ND< 29.9	U	ND< 20.0	U	ND< 28.9	U	ND< 24.5	U	ND< 19.0	U	ND< 19.0	U	ND< 33.2	U	ND< 25.2	U	ND< 30.1	U	ND< 24.4	U	ND< 28.7	U
2-Hexanone		ND< 7.47	U	ND< 5.01	U	ND< 7.21	U	ND< 6.11	U	ND< 4.75	U	ND< 4.75	U	ND< 8.30	U	ND< 6.30	U	ND< 7.54	U	ND< 6.09	U	ND< 7.19	U
Acetone	100000	ND< 14.9	U	ND< 10.0	U	ND< 14.4	U	ND< 12.2	U	ND< 9.49	U	ND< 9.49	U	ND< 16.6	U	ND< 12.6	U	ND< 15.1	U	ND< 12.2	U	ND< 14.4	U
Benzene	4800	ND< 2.99	U	ND< 2.00	U	ND< 2.89	U	ND< 2.45	U	ND< 1.90	U	ND< 1.90	U	ND< 3.32	U	ND< 2.52	U	ND< 3.01	U	ND< 2.44	U	ND< 2.87	U
Bromochloromethane		ND< 7.47	U	ND< 5.01	U	ND< 7.21	U	ND< 6.11	U	ND< 4.75	U	ND< 4.75	U	ND< 8.30	U	ND< 6.30	U	ND< 7.54	U	ND< 6.09	U	ND< 7.19	U
Bromodichloromethane		ND< 2.99	U	ND< 2.00	U	ND< 2.89	U	ND< 2.45	U	ND< 1.90	U	ND< 1.90	U	ND< 3.32	U	ND< 2.52	U	ND< 3.01	U	ND< 2.44	U	ND< 2.87	U
Bromoform		ND< 7.47	U	ND< 5.01	U	ND< 7.21	U	ND< 6.11	U	ND< 4.75	U	ND< 4.75	U	ND< 8.30	U	ND< 6.30	U	ND< 7.54	U	ND< 6.09	U	ND< 7.19	U
Bromomethane		ND< 2.99	U	ND< 2.00	U	ND< 2.89	U	ND< 2.45	U	ND< 1.90	U	ND< 1.90	U	ND< 3.32	U	ND< 2.52	U	ND< 3.01	U	ND< 2.44	U	ND< 2.87	U
Carbon Disulfide		ND< 2.99	U	ND< 2.00	U	ND< 2.89	U	ND< 2.45	U	ND< 1.90	U	ND< 1.90	U	ND< 3.32	U	ND< 2.52	U	ND< 3.01	U	ND< 2.44	U	ND< 2.87	U
Carbon Tetrachloride	2400	ND< 2.99	U	ND< 2.00	U	ND< 2.89	U	ND< 2.45	U	ND< 1.90	U	ND< 1.90	U	ND< 3.32	U	ND< 2.52	U	ND< 3.01	U	ND< 2.44	U	ND< 2.87	U
Chlorobenzene	100000	ND< 2.99	U	ND< 2.00	U	ND< 2.89	U	ND< 2.45	U	ND< 1.90	U	ND< 1.90	U	ND< 3.32	U	ND< 2.52	U	ND< 3.01	U	ND< 2.44	U	ND< 2.87	U
Chloroethane		ND< 2.99	U	ND< 2.00	U	ND< 2.89	U	ND< 2.45	U	ND< 1.90	U	ND< 1.90	U	ND< 3.32	U	ND< 2.52	U	ND< 3.01	U	ND< 2.44	U	ND< 2.87	U
Chloroform	49000	ND< 2.99	U	ND< 2.00	U	ND< 2.89	U	ND< 2.45	U	ND< 1.90	U	ND< 1.90	U	ND< 3.32	U	ND< 2.52	U	ND< 3.01	U	ND< 2.44	U	ND< 2.87	U
Chloromethane		ND< 2.99	U	ND< 2.00	U	ND< 2.89	U	ND< 2.45	U	ND< 1.90	U	ND< 1.90	U	ND< 3.32	U	ND< 2.52	U	ND< 3.01	U	ND< 2.44	U	ND< 2.87	U
Cis-1,2-Dichloroethylene	100000	ND< 2.99	U	ND< 2.00	U	ND< 2.89	U	ND< 2.45	U	ND< 1.90	U	ND< 1.90	U	ND< 3.32	U	ND< 2.52	U	ND< 3.01	U	ND< 2.44	U	ND< 2.87	U
Cis-1,3-Dichloropropene		ND< 2.99	U	ND< 2.00	U	ND< 2.89	U	ND< 2.45	U	ND< 1.90	U	ND< 1.90	U	ND< 3.32	U	ND< 2.52	U	ND< 3.01	U	ND< 2.44	U	ND< 2.87	U
Cyclohexane		ND< 14.9	U	ND< 10.0	U	ND< 14.4	U	ND< 12.2	U	ND< 9.49	U	ND< 9.49	U	ND< 16.6	U	ND< 12.6	U	ND< 15.1	U	ND< 12.2	U	ND< 14.4	U
Cymene		ND< 2.99	U	ND< 2.00	U	ND< 2.89	U	ND< 2.45	U	ND< 1.90	U	ND< 1.90	U	ND< 3.32	U	ND< 2.52	U	ND< 3.01	U	ND< 2.44	U	ND< 2.87	U
Dibromochloromethane		ND< 2.99	U	ND< 2.00	U	ND< 2.89	U	ND< 2.45	U	ND< 1.90	U	ND< 1.90	U	ND< 3.32	U	ND< 2.52	U	ND< 3.01	U	ND< 2.44	U	ND< 2.87	U
Dichlorodifluoromethane		ND< 2.99	U	ND< 2.00	U	ND< 2.89	U	ND< 2.45	U	ND< 1.90	U	ND< 1.90	U	ND< 3.32	U	ND< 2.52	U	ND< 3.01	U	ND< 2.44	U	ND< 2.87	U
Ethylbenzene	41000	ND< 2.99	U	ND< 2.00	U	ND< 2.89	U	ND< 2.45	U	ND< 1.90	U	ND< 1.90	U	ND< 3.32	U	ND< 2.52	U	ND< 3.01	U	ND< 2.44	U	ND< 2.87	U
Isopropylbenzene (Cumene)		ND< 2.99	U	ND< 2.00	U	ND< 2.89	U	ND< 2.45	U	ND< 1.90	U	ND< 1.90	U	ND< 3.32	U	ND< 2.52	U	ND< 3.01	U	ND< 2.44	U	ND< 2.87	U
Methyl Acetate		ND< 2.99	U	ND< 2.00	U	ND< 2.89	U	ND< 2.45	U	ND< 1.90	U	ND< 1.90	U	ND< 3.32	U	ND< 2.52	U	ND< 3.01	U	ND< 2.44	U	ND< 2.87	U
Methyl Ethyl Ketone (2-Butanone)	100000	ND< 14.9	U	ND< 10.0	U	ND< 14.4	U	ND< 12.2	U	ND< 9.49	U	ND< 9.49	U	ND< 16.6	U	ND< 12.6	U	ND< 15.1	U	ND< 12.2	U	ND< 14.4	U
Methyl Isobutyl Ketone (4-Methyl-2-Pentanone)		ND< 7.47	U	ND< 5.01	U	ND< 7.21	U	ND< 6.11	U	ND< 4.75	U	ND< 4.75	U	ND< 8.30	U	ND< 6.30	U	ND< 7.54	U	ND< 6.09	U	ND< 7.19	U
Methyl Tert-Butyl Ether (MTBE)	100000	ND< 2.99	U	ND< 2.00	U	ND< 2.89	U	ND< 2.45	U	ND< 1.90	U	ND< 1.90	U	ND< 3.32	U	ND< 2.52	U	ND< 3.01	U	ND< 2.44	U	ND< 2.87	U
Methylcyclohexane		ND< 2.99	U	ND< 2.00	U	ND< 2.89	U	ND< 2.45	U	ND< 1.90	U	ND< 1.90	U	ND< 3.32	U	ND< 2.52	U	ND< 3.01	U	ND< 2.44	U	ND< 2.87	U
Methylene Chloride	100000	ND< 7.47	U	ND< 5.01	U	ND< 7.21	U	ND< 6.11	U	ND< 4.75	U	ND< 4.75	U	ND< 8.30	U	ND< 6.30	U	ND< 7.54	U	ND< 6.09	U	ND< 7.19	U
M-P-Xylene		ND< 2.99	U	ND< 2.00	U	ND< 2.89	U	ND< 2.45	U	ND< 1.90	U	ND< 1.90	U	ND< 3.32	U	ND< 2.52	U	ND< 3.01	U	ND< 2.44	U	ND< 2.87	U
Naphthalene	100000	ND< 7.47	U	ND< 5.01	U	ND< 7.21	U	ND< 6.11	U	ND< 4.75	U	ND< 4.75	U	ND< 8.30	U	ND< 6.30	U	ND< 7.54	U	ND< 6.09	U	ND< 7.19	U
N-Butylbenzene	100000	ND< 2.99	U	ND< 2.00	U	ND< 2.89	U	ND< 2.45	U	ND< 1.90	U	ND< 1.90	U	ND< 3.32	U	ND< 2.52	U	ND< 3.01	U	ND< 2.44	U	ND< 2.87	U
N-Propylbenzene	100000	ND< 2.99	U	ND< 2.00	U	ND< 2.89	U	ND< 2.45	U	ND< 1.90	U	ND< 1.90	U	ND< 3.32	U	ND< 2.52	U	ND< 3.01	U	ND< 2.44	U	ND< 2.87	U
O-Xylene (1,2-Dimethylbenzene)		ND< 2.99	U	ND< 2.00	U	ND< 2.89	U	ND< 2.45	U	ND< 1.90	U	ND< 1.90	U	ND< 3.32	U	ND< 2.52	U	ND< 3.01	U	ND< 2.44	U	ND< 2.87	U
Sec-Butylbenzene	100000	ND< 2.99	U	ND< 2.00	U	ND< 2.89	U	ND< 2.45	U	ND< 1.90	U	ND< 1.90	U	ND< 3.32	U	ND< 2.52	U	ND< 3.01	U	ND< 2.44	U	ND< 2.87	U
Styrene		ND< 7.47	U	ND< 5.01	U	ND< 7.21	U	ND< 6.11	U	ND< 4.75	U	ND< 4.75	U	ND< 8.30	U	ND< 6.30	U	ND< 7.54	U	ND< 6.09	U	ND< 7.19	U
T-Butylbenzene	100000	ND< 2.99	U	ND< 2.00	U	ND< 2.89	U	ND< 2.45	U	ND< 1.90	U	ND< 1.90	U	ND< 3.32	U	ND< 2.52	U	ND< 3.01	U	ND< 2.44	U	ND< 2.87	U
Tetrachloroethylene (PCE)	19000	ND< 2.99	U	ND< 2.00	U	ND< 2.89	U	ND< 2.45	U	ND< 1.90	U	ND< 1.90	U	ND< 3.32	U	ND< 2.52	U	ND< 3.01	U	ND< 2.44	U	ND< 2.87	U
Toluene	100000	ND< 2.99	U	ND< 2.00	U	ND< 2.89	U	ND< 2.45	U	ND< 1.90	U	ND< 1.90	U	ND< 3.32	U	ND< 2.52	U	ND< 3.01	U	ND< 2.44	U	ND< 2.87	U
Trans-1,2-Dichloroethene	100000	ND< 2.99	U	ND< 2.00	U	ND< 2.89	U	ND< 2.45	U	ND< 1.90	U	ND< 1.90	U	ND< 3.32	U	ND< 2.52	U	ND< 3.01	U	ND< 2.44	U	ND< 2.87	U
Trans-1,3-Dichloropropene		ND< 2.99	U	ND< 2.00	U	ND< 2.89	U	ND< 2.45	U	ND< 1.90	U	ND< 1.90	U	ND< 3.32	U	ND< 2.52	U	ND< 3.01	U	ND< 2.44	U	ND< 2.87	U
Trichloroethylene (TCE)	21000	ND< 2.99	U	ND< 2.00	U	ND< 2.89	U	ND< 2.45	U	ND< 1.90	U	ND< 1.90	U	ND< 3.32	U	ND< 2.52	U	ND< 3.01	U	ND< 2.44	U	ND< 2.87	U
Trichlorofluoromethane		ND< 2.99	U	ND< 2.00	U	ND< 2.89	U	ND< 2.45	U	ND< 1.90	U	ND< 1.90	U	ND< 3.32	U	ND< 2.52	U	ND< 3.01	U	ND< 2.44	U	ND< 2.87	U
Vinyl Chloride	900	ND< 2.99	U	ND< 2.00	U	ND< 2.89	U	ND< 2.45	U	ND< 1.90	U	ND< 1.90	U	ND< 3.32	U	ND< 2.52	U	ND< 3.01	U	ND< 2.44	U	ND< 2.87	U

NOTES:

1. Soil sample analytical results are compared to the New York State Department of Environmental Conservation (NYSDEC) Title 6 of the official compilation of New York Codes, Rules, and Regulations (NYCRR) Part 375 Restricted Residential Soil Cleanup Objectives (RRSCOs).
2. RRSCO exceedances are in bold and highlighted yellow.
3. ND = Not Detected
4. Results shown as "ND" with Reporting Limits exceeding RRSCOs are in bold.
5. VOCs = Volatile Organic Compounds
6. µg/kg = micrograms per kilogram.
7. Qualifier (Q) definitions are provided in the official lab reports.

Table 4B – SVOCs in Soil – AOC-4

TABLE 4B: Semi-Volatile Organic Compounds (SVOCs) in Soil
AOC-4 - Fire Station Fuel Storage and Dispensing Area
Soil Sample Results (non-QA/QC)
Hudson River Psychiatric Center - North BCP Site, Poughkeepsie, NY
PVE Sheffler File #560909

	Date Sampled	5/15/2014		5/15/2014		11/24/2014		12/15/2014		5/15/2014		5/15/2014		12/16/2014		12/16/2014		5/15/2014		11/24/2014		12/15/2014	
	Location	FS-1		FS-1		FS-2		FS-2		FS-2		FS-2		FS-3		FS-3		FS-3		FS-SS-1		FS-SS-1	
	Sample ID	FS-1 2-4'		FS-1 19-20'		FS-2 (0-2")		FS-2 2-24"		FS-2 2-3'		FS-2 6.5-8'		FS-3 0-2"		FS-3 2-24"		FS-3 1.5-3'		FS-SS-1 (0-2")		FS-SS-1 2-24"	
Analyte	RRSCOs	Result	Q	Result	Q	Result	Q	Result	Q	Result	Q	Result	Q	Result	Q	Result	Q	Result	Q	Result	Q	Result	Q
SVOCs (µg/kg)																							
1,2,4,5-Tetrachlorobenzene		ND< 333	U	ND< 300	U	ND< 380	U	ND< 339	U	ND< 327	U	ND< 316	U	ND< 1500	U	ND< 1530	U	ND< 339	U	ND< 384	U	ND< 311	U
1,2,4-Trichlorobenzene		ND< 333	U	ND< 300	U	ND< 380	U	ND< 339	U	ND< 327	U	ND< 316	U	ND< 1500	U	ND< 1530	U	ND< 339	U	ND< 384	U	ND< 311	U
1,2-Dichlorobenzene	100000	ND< 333	U	ND< 300	U	ND< 380	U	ND< 339	U	ND< 327	U	ND< 316	U	ND< 1500	U	ND< 1530	U	ND< 339	U	ND< 384	U	ND< 311	U
1,3-Dichlorobenzene	49000	ND< 333	U	ND< 300	U	ND< 380	U	ND< 339	U	ND< 327	U	ND< 316	U	ND< 1500	U	ND< 1530	U	ND< 339	U	ND< 384	U	ND< 311	U
1,4-Dichlorobenzene	13000	ND< 333	U	ND< 300	U	ND< 380	U	ND< 339	U	ND< 327	U	ND< 316	U	ND< 1500	U	ND< 1530	U	ND< 339	U	ND< 384	U	ND< 311	U
2,2-Oxybis(2-Chloropropane)		ND< 333	U	ND< 300	U	ND< 380	U	ND< 339	U	ND< 327	U	ND< 316	U	ND< 1500	U	ND< 1530	U	ND< 339	U	ND< 384	U	ND< 311	U
2,3,4,6-Tetrachlorophenol		ND< 333	U	ND< 300	U	ND< 380	U	ND< 339	U	ND< 327	U	ND< 316	U	ND< 1500	U	ND< 1530	U	ND< 339	U	ND< 384	U	ND< 311	U
2,4,5-Trichlorophenol		ND< 665	U	ND< 600	U	ND< 761	U	ND< 678	U	ND< 653	U	ND< 632	U	ND< 3000	U	ND< 3050	U	ND< 677	U	ND< 768	U	ND< 622	U
2,4,6-Trichlorophenol		ND< 333	U	ND< 300	U	ND< 380	U	ND< 339	U	ND< 327	U	ND< 316	U	ND< 1500	U	ND< 1530	U	ND< 339	U	ND< 384	U	ND< 311	U
2,4-Dichlorophenol		ND< 333	U	ND< 300	U	ND< 380	U	ND< 339	U	ND< 327	U	ND< 316	U	ND< 1500	U	ND< 1530	U	ND< 339	U	ND< 384	U	ND< 311	U
2,4-Dimethylphenol		ND< 333	U	ND< 300	U	ND< 380	U	ND< 339	U	ND< 327	U	ND< 316	U	ND< 1500	U	ND< 1530	U	ND< 339	U	ND< 384	U	ND< 311	U
2,4-Dinitrophenol		ND< 665	U	ND< 600	U	ND< 761	U	ND< 678	U	ND< 653	U	ND< 632	U	ND< 3000	U	ND< 3050	U	ND< 677	U	ND< 768	U	ND< 622	U
2,4-Dinitrotoluene		ND< 333	U	ND< 300	U	ND< 380	U	ND< 339	U	ND< 327	U	ND< 316	U	ND< 1500	U	ND< 1530	U	ND< 339	U	ND< 384	U	ND< 311	U
2,6-Dinitrotoluene		ND< 333	U	ND< 300	U	ND< 380	U	ND< 339	U	ND< 327	U	ND< 316	U	ND< 1500	U	ND< 1530	U	ND< 339	U	ND< 384	U	ND< 311	U
2-Chloronaphthalene		ND< 333	U	ND< 300	U	ND< 380	U	ND< 339	U	ND< 327	U	ND< 316	U	ND< 1500	U	ND< 1530	U	ND< 339	U	ND< 384	U	ND< 311	U
2-Chlorophenol		ND< 333	U	ND< 300	U	ND< 380	U	ND< 339	U	ND< 327	U	ND< 316	U	ND< 1500	U	ND< 1530	U	ND< 339	U	ND< 384	U	ND< 311	U
2-Methylnaphthalene		ND< 333	U	ND< 300	U	ND< 380	U	ND< 339	U	ND< 327	U	ND< 316	U	ND< 1500	U	ND< 1530	U	ND< 339	U	ND< 384	U	ND< 311	U
2-Methylphenol (O-Cresol)	100000	ND< 333	U	ND< 300	U	ND< 380	U	ND< 339	U	ND< 327	U	ND< 316	U	ND< 1500	U	ND< 1530	U	ND< 339	U	ND< 384	U	ND< 311	U
2-Nitroaniline		ND< 665	U	ND< 600	U	ND< 761	U	ND< 678	U	ND< 653	U	ND< 632	U	ND< 3000	U	ND< 3050	U	ND< 677	U	ND< 768	U	ND< 622	U
2-Nitrophenol		ND< 333	U	ND< 300	U	ND< 380	U	ND< 339	U	ND< 327	U	ND< 316	U	ND< 1500	U	ND< 1530	U	ND< 339	U	ND< 384	U	ND< 311	U
3,3'-Dichlorobenzidine		ND< 333	U	ND< 300	U	ND< 380	U	ND< 339	U	ND< 327	U	ND< 316	U	ND< 1500	U	ND< 1530	U	ND< 339	U	ND< 384	U	ND< 311	U
3-Methylphenol	100000	ND< 333	U	ND< 300	U	ND< 380	U	ND< 339	U	ND< 327	U	ND< 316	U	ND< 1500	U	ND< 1530	U	ND< 339	U	ND< 384	U	ND< 311	U
3-Nitroaniline		ND< 665	U	ND< 600	U	ND< 761	U	ND< 678	U	ND< 653	U	ND< 632	U	ND< 3000	U	ND< 3050	U	ND< 677	U	ND< 768	U	ND< 622	U
4,6-Dinitro-2-Methylphenol		ND< 665	U	ND< 600	U	ND< 761	U	ND< 678	U	ND< 653	U	ND< 632	U	ND< 3000	U	ND< 3050	U	ND< 677	U	ND< 768	U	ND< 622	U
4-Bromophenyl Phenyl Ether		ND< 333	U	ND< 300	U	ND< 380	U	ND< 339	U	ND< 327	U	ND< 316	U	ND< 1500	U	ND< 1530	U	ND< 339	U	ND< 384	U	ND< 311	U
4-Chloro-3-Methylphenol		ND< 333	U	ND< 300	U	ND< 380	U	ND< 339	U	ND< 327	U	ND< 316	U	ND< 1500	U	ND< 1530	U	ND< 339	U	ND< 384	U	ND< 311	U
4-Chloroaniline		ND< 333	U	ND< 300	U	ND< 380	U	ND< 339	U	ND< 327	U	ND< 316	U	ND< 1500	U	ND< 1530	U	ND< 339	U	ND< 384	U	ND< 311	U
4-Chlorophenyl Phenyl Ether		ND< 333	U	ND< 300	U	ND< 380	U	ND< 339	U	ND< 327	U	ND< 316	U	ND< 1500	U	ND< 1530	U	ND< 339	U	ND< 384	U	ND< 311	U
4-Nitroaniline		ND< 665	U	ND< 600	U	ND< 761	U	ND< 678	U	ND< 653	U	ND< 632	U	ND< 3000	U	ND< 3050	U	ND< 677	U	ND< 768	U	ND< 622	U
4-Nitrophenol		ND< 665	U	ND< 600	U	ND< 761	U	ND< 678	U	ND< 653	U	ND< 632	U	ND< 3000	U	ND< 3050	U	ND< 677	U	ND< 768	U	ND< 622	U
Acenaphthene	100000	ND< 333	U	ND< 300	U	ND< 380	U	ND< 339	U	ND< 327	U	ND< 316	U	ND< 1500	U	ND< 1530	U	ND< 339	U	ND< 384	U	ND< 311	U
Acenaphthylene	100000	ND< 333	U	ND< 300	U	383		ND< 339	U	ND< 327	U	ND< 316	U	6690		2890		ND< 339	U	ND< 384	U	ND< 311	U
Acetophenone		ND< 333	U	ND< 300	U	ND< 380	U	ND< 339	U	ND< 327	U	ND< 316	U	ND< 1500	U	ND< 1530	U	ND< 339	U	ND< 384	U	ND< 311	U
Anthracene	100000	ND< 333	U	ND< 300	U	309	J	ND< 339	U	ND< 327	U	ND< 316	U	8620		3680		222	J	ND< 384	U	ND< 311	U
Atrazine		ND< 333	U	ND< 300	U	ND< 380	U	ND< 339	U	ND< 327	U	ND< 316	U	ND< 1500	U	ND< 1530	U	ND< 339	U	ND< 384	U	ND< 311	U
Benzaldehyde		ND< 333	U	ND< 300	U	ND< 380	U	ND< 339	U	ND< 327	U	ND< 316	U	ND< 1500	U	ND< 1530	U	ND< 339	U	ND< 384	U	ND< 311	U
Benzo(A)Anthracene	**1000**	ND< 333	U	ND< 300	U	613		234	J	ND< 327	U	ND< 316	U	**12100**		**5210**		425		ND< 384	U	ND< 311	U
Benzo(A)Pyrene	**1000**	ND< 333	U	ND< 300	U	610		249	J	ND< 327	U	ND< 316	U	**12800**		**5810**		367		ND< 384	U	ND< 311	U
Benzo(B)Fluoranthene	**1000**	ND< 333	U	ND< 300	U	785		257	J	ND< 327	U	ND< 316	U	**15300**		**6440**		335	J	ND< 384	U	ND< 311	U
Benzo(G,H,I)Perylene	100000	ND< 333	U	ND< 300	U	403		192	J	ND< 327	U	ND< 316	U	8900		3880		184	J	ND< 384	U	ND< 311	U
Benzo(K)Fluoranthene	**3900**	ND< 333	U	ND< 300	U	503		246	J	ND< 327	U	ND< 316	U	**8880**		**4400**		284	J	ND< 384	U	ND< 311	U
Benzyl Butyl Phthalate		ND< 333	U	ND< 300	U	ND< 380	U	ND< 339	U	ND< 327	U	ND< 316	U	ND< 1500	U	ND< 1530	U	ND< 339	U	ND< 384	U	ND< 311	U
Biphenyl (Diphenyl)		ND< 333	U	ND< 300	U	ND< 380	U	ND< 339	U	ND< 327	U	ND< 316	U	ND< 1500	U	ND< 1530	U	ND< 339	U	ND< 384	U	ND< 311	U
Bis(2-Chloroethoxy) Methane		ND< 333	U	ND< 300	U	ND< 380	U	ND< 339	U	ND< 327	U	ND< 316	U	ND< 1500	U	ND< 1530	U	ND< 339	U	ND< 384	U	ND< 311	U
Bis(2-Chloroethyl) Ether (2-Chloroethyl Ether)		ND< 333	U	ND< 300	U	ND< 380	U	ND< 339	U	ND< 327	U	ND< 316	U	ND< 1500	U	ND< 1530	U	ND< 339	U	ND< 384	U	ND< 311	U
Bis(2-Ethylhexyl) Phthalate		ND< 333	U	ND< 300	U	ND< 380	U	ND< 339	U	ND< 327	U	ND< 316	U	ND< 1500	U	ND< 1530	U	ND< 339	U	ND< 384	U	ND< 311	U
Caprolactam		ND< 333	U	ND< 300	U	ND< 380	U	ND< 339	U	ND< 327	U	ND< 316	U	ND< 1500	U	ND< 1530	U	ND< 339	U	ND< 384	U	ND< 311	U
Carbazole		ND< 333	U	ND< 300	U	ND< 380	U	ND< 339	U	ND< 327	U	ND< 316	U	ND< 1500	U	ND< 1530	U	ND< 339	U	ND< 384	U	ND< 311	U
Chrysene	**3900**	ND< 333	U	ND< 300	U	635		326	J	ND< 327	U	ND< 316	U	**10900**		**4730**		425		ND< 384	U	ND< 311	U
Dibenz(A,H)Anthracene	**330**	**ND< 333**	**U**	ND< 300	U	**ND< 380**	**U**	**ND< 339**	**U**	ND< 327	U	ND< 316	U	**3810**		**1650**		**ND< 339**	**U**	**ND< 384**	**U**	ND< 311	U
Dibenzofuran	59000	ND< 333	U	ND< 300	U	ND< 380	U	ND< 339	U	ND< 327	U	ND< 316	U	ND< 1500	U	ND< 1530	U	ND< 339	U	ND< 384	U	ND< 311	U
Diethyl Phthalate		ND< 333	U	ND< 300	U	ND< 380	U	ND< 339	U	ND< 327	U	ND< 316	U	ND< 1500	U	ND< 1530	U	ND< 339	U	ND< 384	U	ND< 311	U
Dimethyl Phthalate		ND< 665	U	ND< 600	U	ND< 761	U	ND< 678	U	ND< 653	U	ND< 632	U	ND< 3000	U	ND< 3050	U	ND< 677	U	ND< 768	U	ND< 622	U
Di-N-Butyl Phthalate		ND< 333	U	ND< 300	U	ND< 380	U	ND< 339	U	ND< 327	U	ND< 316	U	ND< 1500	U	ND< 1530	U	ND< 339	U	ND< 384	U	ND< 311	U
Di-N-Octylphthalate		ND< 333	U	ND< 300	U	ND< 380	U	ND< 339	U	ND< 327	U	ND< 316	U	ND< 1500	U	ND< 1530	U	ND< 339	U	ND< 384	U	ND< 311	U
Fluoranthene	100000	ND< 333	U	ND< 300	U	803		428		ND< 327	U	ND< 316	U	14800		6990		923		ND< 384	U	ND< 311	U
Fluorene	100000	ND< 333	U	ND< 300	U	ND< 380	U	ND< 339	U	ND< 327	U	ND< 316	U	ND< 1500	U	ND< 1530	U	ND< 339	U	ND< 384	U	ND< 311	U
Hexachlorobenzene	**1200**	ND< 333	U	ND< 300	U	ND< 380	U	ND< 339	U	ND< 327	U	ND< 316	U	**ND< 1500**	**U**	**ND< 1530**	**U**	ND< 339	U	ND< 384	U	ND< 311	U
Hexachlorobutadiene		ND< 333	U	ND< 300	U	ND< 380	U	ND< 339	U	ND< 327	U	ND< 316	U	ND< 1500	U	ND< 1530	U	ND< 339	U	ND< 384	U	ND< 311	U
Hexachlorocyclopentadiene		ND< 333	U	ND< 300	U	ND< 380	U	ND< 339	U	ND< 327	U	ND< 316	U	ND< 1500	U	ND< 1530	U	ND< 339	U	ND< 384	U	ND< 311	U
Hexachloroethane		ND< 333	U	ND< 300	U	ND< 380	U	ND< 339	U	ND< 327	U	ND< 316	U	ND< 1500	U	ND< 1530	U	ND< 339	U	ND< 384	U	ND< 311	U
Indeno(1,2,3-C,D)Pyrene	**500**	ND< 333	U	ND< 300	U	**567**		223	J	ND< 327	U	ND< 316	U	**12400**		**5420**		201	J	ND< 384	U	ND< 311	U
Isophorone		ND< 333	U	ND< 300	U	ND< 380	U	ND< 339	U	ND< 327	U	ND< 316	U	ND< 1500	U	ND< 1530	U	ND< 339	U	ND< 384	U	ND< 311	U
Naphthalene	100000	ND< 333	U	ND< 300	U	ND< 380	U	ND< 339	U	ND< 327	U	ND< 316	U	ND< 1500	U	ND< 1530	U	ND< 339	U	ND< 384	U	ND< 311	U
Nitrobenzene		ND< 333	U	ND< 300	U	ND< 380	U	ND< 339	U	ND< 327	U	ND< 316	U	ND< 1500	U	ND< 1530	U	ND< 339	U	ND< 384	U	ND< 311	U
N-Nitrosodi-N-Propylamine		ND< 333	U	ND< 300	U	ND< 380	U	ND< 339	U	ND< 327	U	ND< 316	U	ND< 1500	U	ND< 1530	U	ND< 339	U	ND< 384	U	ND< 311	U
N-Nitrosodiphenylamine		ND< 333	U	ND< 300	U	ND< 380	U	ND< 339	U	ND< 327	U	ND< 316	U	ND< 1500	U	ND< 1530	U	ND< 339	U	ND< 384	U	ND< 311	U
Pentachlorophenol	6700	ND< 665	U	ND< 600	U	ND< 761	U	ND< 678	U	ND< 653	U	ND< 632	U	ND< 3000	U	ND< 3050	U	ND< 677	U	ND< 768	U	ND< 622	U
Phenanthrene	100000	ND< 333	U	ND< 300	U	194	J	187	J	ND< 327	U	ND< 316	U	1780		929	J	692		ND< 384	U	ND< 311	U
Phenol	100000	ND< 333	U	ND< 300	U	ND< 380	U	ND< 339	U	ND< 327	U	ND< 316	U	ND< 1500	U	ND< 1530	U	ND< 339	U	ND< 384	U	ND< 311	U
Pyrene	100000	ND< 333	U	ND< 300	U	779		440		ND< 327	U	ND< 316	U	12400		5620		660		ND< 384	U	ND< 311	U

NOTES:

1. Soil sample analytical results are compared to the New York State Department of Environmental Conservation (NYSDEC) Title 6 of the official compilation of New York Codes, Rules, and Regulations (NYCRR) Part 375 Restricted Residential Soil Cleanup Objectives (RRSCOs).
2. RRSCO exceedances are in bold and highlighted yellow.
3. ND = Not Detected
4. Results shown as "ND" with Reporting Limits exceeding RRSCOs are in bold.
5. SVOCs = Semi-Volatile Organic Compounds
6. µg/kg = micrograms per kilogram.
7. Qualifier (Q) definitions are provided in the official lab reports.

Table 4C – Total Metals in Soil – AOC-4

TABLE 4C: Total Metals in Soil

AOC-4 - Fire Station Fuel Storage and Dispensing Area

Soil Sample Results (non-QA/QC)

Hudson River Psychiatric Center - North BCP Site, Poughkeepsie, NY

PVE Sheffler File #560909

	Date Sampled	5/15/2014		5/15/2014		11/24/2014		12/15/2014		5/15/2014		5/15/2014		12/16/2014		12/16/2014	
	Location	FS-1		FS-1		FS-2		FS-2		FS-2		FS-2		FS-3		FS-3	
	Sample ID	FS-1 2-4'		FS-1 19-20'		FS-2 (0-2")		FS-2 2-24"		FS-2 2-3'		FS-2 6.5-8'		FS-3 0-2"		FS-3 2-24"	
Analyte	RRSCOs	Result	Q	Result	Q	Result	Q	Result	Q	Result	Q	Result	Q	Result	Q	Result	Q
Metals (mg/kg)																	
Aluminum		2080		12900						16100		5950					
Antimony		ND< 6.64	U	ND< 6.05	U					ND< 7.84	U	ND< 6.56	U				
Arsenic	**16**	1.83		5.24		12.7		**18.8**		7.84		2.52		7.15		5.05	
Barium	400	16.9		27.8		54.3		56.5		65.4		31.1		26.3		23.2	
Beryllium	72	0.357	J	0.477	J	0.527	J	0.565	J	0.624	J	ND< 0.547	U	0.403	J	0.414	J
Cadmium	4.3	ND< 0.553	U	ND< 0.504	U	ND< 0.686	U	ND< 0.618	U	ND< 0.654	U	ND< 0.547	U	0.641		0.398	J
Calcium		1130		19700						1160		19400					
Chromium, Hexavalent	110					ND< 1.3	U										
Chromium, Hexavalent	110	ND< 1.2	U	ND< 1.0	U			ND< 1.2	U	ND< 1.2	U	ND< 1.1	U	ND< 1.1	U	ND< 1.1	U
Chromium, Total		6.15		15.4		19.7		17.7		15.8		9.17		15.6		13.8	
Cobalt		8.74		10.3						9.22		4.04	J				
Copper	270	19.1		26.7		45.7		44.9		23.7		11.3		31.8		27.3	
Cyanide	27	0.740		ND< 0.52	U					0.630		ND< 0.56	U				
Cyanide	27					ND< 0.627	U	ND< 0.479	U					ND< 0.538	U	0.208	J
Iron		9240		26700						22600		12200					
Lead	400	15.5		9.99		174		52.5		22.8		6.06		194		99.4	
Magnesium		353		6430						3990		4880	M				
Manganese	2000	101		760		647		682		810		355		380		428	
Mercury	0.81	ND< 0.0218	U	ND< 0.0201	U	0.138		0.0852		0.0555		0.0200	J	0.0360		0.0337	
Nickel	310	14.8		24.2		24.3		24.9		20.5		7.76		23.1		20.5	
Potassium		354		1010						907		1170					
Selenium	180	0.589	J	ND< 1.01	U	ND< 1.37	U	ND< 1.24	U	ND< 1.31	U	ND< 1.09	U	ND< 1.11	U	ND< 1.01	U
Silver	180	ND< 1.11	U	ND< 1.01	U	ND< 1.37	U	ND< 1.24	U	ND< 1.31	U	ND< 1.09	U	ND< 1.11	U	ND< 1.01	U
Sodium		186	J	ND< 252	U					ND< 327	U	ND< 274	U				
Thallium		ND< 2.77	U	ND< 2.52	U					ND< 3.27	U	ND< 2.74	U				
Vanadium		11.6		14.3						20.3		16.2					
Zinc	10000	14.5		77.7		104		78.5		71.0		31.6		139		102	

NOTES:

1. Soil sample analytical results are compared to the New York State Department of Environmental Conservation (NYSDEC) Title 6 of the official compilation of New York Codes, Rules, and Regulations (NYCRR) Part 375 Restricted Residential Soil Cleanup Objectives (RRSCOs).
2. RRSCO exceedances are in bold and highlighted yellow.
3. ND = Not Detected
4. Results shown as "ND" with Reporting Limits exceeding RRSCOs are in bold.
5. mg/kg = milligrams per kilogram.
6. Qualifier (Q) definitions are provided in the official lab reports.

TABLE 4C: Total Metals in Soil

AOC-4 - Fire Station Fuel Storage and Dispensing Area

Soil Sample Results (non-QA/QC)

Hudson River Psychiatric Center - North BCP Site, Poughkeepsie, NY

PVE Sheffler File #560909

	Date Sampled	5/15/2014		11/24/2014		12/15/2014	
	Location	FS-3		FS-SS-1		FS-SS-1	
	Sample ID	FS-3 1.5-3'		FS-SS-1 (0-2")		FS-SS-1 2-24"	
Analyte	RRSCOs	Result	Q	Result	Q	Result	Q
Metals (mg/kg)							
Aluminum		2140					
Antimony		ND< 7.71	U				
Arsenic	**16**	6.90		5.46		2.23	D
Barium	400	34.4		42.8		28.4	
Beryllium	72	0.368	J	0.476	J	0.320	J
Cadmium	4.3	ND< 0.643	U	ND< 0.701	U	ND< 0.550	U
Calcium		3630					
Chromium, Hexavalent	110			ND< 1.3	U		
Chromium, Hexavalent	110	ND< 1.2	U			ND< 1.2	U
Chromium, Total		10.9		11.0		7.91	
Cobalt		6.76					
Copper	270	17.5		22.2		22.2	
Cyanide	27	1.20					
Cyanide	27			ND< 0.582	U	ND< 0.528	U
Iron		8390					
Lead	400	101		32.0		8.40	D
Magnesium		459					
Manganese	2000	99.4		556		1590	D
Mercury	0.81	ND< 0.0193	U	0.251		0.0589	D
Nickel	310	14.8		19.1		10.2	D
Potassium		479					
Selenium	180	ND< 1.29	U	0.818	J	ND< 1.10	U
Silver	180	ND< 1.29	U	ND< 1.40	U	ND< 1.10	U
Sodium		254	J				
Thallium		ND< 3.21	U				
Vanadium		20.0					
Zinc	10000	45.0		54.6		8.95	D

NOTES:

1. Soil sample analytical results are compared to the New York State Department of Environmental Conservation (NYSDEC) Title 6 of the official compilation of New York Codes, Rules, and Regulations (NYCRR) Part 375 Restricted Residential Soil Cleanup Objectives (RRSCOs).
2. RRSCO exceedances are in bold and highlighted yellow.
3. ND = Not Detected
4. Results shown as "ND" with Reporting Limits exceeding RRSCOs are in bold.
5. mg/kg = milligrams per kilogram.
6. Qualifier (Q) definitions are provided in the official lab reports.

Table 4D – Pesticides, Herbicides, and PCBs in Soil – AOC-4

TABLE 4D: Pesticides, Herbicides, and PCBs in Soil
AOC-4 - Fire Station Fuel Storage and Dispensing Area
Soil Sample Results (non-QA/QC)
Hudson River Psychiatric Center - North BCP Site, Poughkeepsie, NY
PVE Sheffler File #560909

	Date Sampled	5/15/2014		5/15/2014		11/24/2014		12/15/2014		12/16/2014		12/16/2014		11/24/2014		12/15/2014	
	Location	FS-1		FS-1		FS-2		FS-2		FS-3		FS-3		FS-SS-1		FS-SS-1	
	Sample ID	FS-1 2-4'		FS-1 19-20'		FS-2 (0-2")		FS-2 2-24"		FS-3 0-2"		FS-3 2-24"		FS-SS-1 (0-2")		FS-SS-1 2-24"	
Analyte	RRSCOs	Result	Q	Result	Q	Result	Q	Result	Q	Result	Q	Result	Q	Result	Q	Result	Q
Pesticides (µg/kg)																	
Aldrin	97	ND< 3.38	U	ND< 3.01	U	2.04	JP	ND< 3.36	U	ND< 15.3	U	ND< 3.11	U	ND< 3.53	U	ND< 3.14	U
Alpha Bhc (Alpha Hexachlorocyclohexane)	480	ND< 3.38	U	ND< 3.01	U	2.14	JP	ND< 3.36	U	8.86	JP	3.34	P	1.81	JP	ND< 3.14	U
Alpha Chlordane	4200	ND< 3.38	U	ND< 3.01	U	36.8	P	7.88	P	134		88.1		3.19	JP	ND< 3.14	U
Alpha Endosulfan	24000	ND< 3.38	U	ND< 3.01	U	ND< 3.78	U	ND< 3.36	U	ND< 15.3	U	ND< 3.11	U	ND< 3.53	U	ND< 3.14	U
Beta Bhc (Beta Hexachlorocyclohexane)	360	ND< 3.38	U	ND< 3.01	U	5.36	P	ND< 3.36	U	ND< 15.3	U	3.32	P	6.29	P	ND< 3.14	U
Beta Endosulfan	24000	ND< 3.38	U	ND< 3.01	U	3.27	JP	ND< 3.36	U	ND< 15.3	U	ND< 3.11	U	ND< 3.53	U	ND< 3.14	U
Delta BHC (Delta Hexachlorocyclohexane)	100000	ND< 3.38	U	ND< 3.01	U	2.15	JP	ND< 3.36	U	ND< 15.3	U	1.74	JP	6.06	P	ND< 3.14	U
Dieldrin	200	ND< 3.38	U	ND< 3.01	U	8.09	P	ND< 3.36	U	ND< 15.3	U	ND< 3.11	U	1.84	JP	ND< 3.14	U
Endosulfan Sulfate	24000	ND< 3.38	U	ND< 3.01	U	30.4	P	ND< 3.36	U	ND< 15.3	U	ND< 3.11	U	4.13	P	ND< 3.14	U
Endrin	11000	ND< 3.38	U	ND< 3.01	U	19.1	P	2.21	JP	34.9	P	14.8	P	3.13	JP	ND< 3.14	U
Endrin Aldehyde		ND< 3.38	U	ND< 3.01	U	14.6	P	2.39	J	15.0	JP	7.43		1.78	JP	ND< 3.14	U
Endrin Ketone		ND< 3.38	U	ND< 3.01	U	16.1	P	5.21		60.3		37.1		ND< 3.53	U	ND< 3.14	U
Gamma Bhc (Lindane)	1300	ND< 3.38	U	ND< 3.01	U	ND< 3.78	U	ND< 3.36	U	ND< 15.3	U	ND< 3.11	U	7.93	P	ND< 3.14	U
Gamma Chlordane		ND< 3.38	U	ND< 3.01	U	2.24	JP	ND< 3.36	U	ND< 15.3	U	3.65	P	ND< 3.53	U	ND< 3.14	U
Heptachlor	2100	ND< 3.38	U	ND< 3.01	U	2.06	JP	ND< 3.36	U	9.15	J	3.79		ND< 3.53	U	ND< 3.14	U
Heptachlor Epoxide		ND< 3.38	U	ND< 3.01	U	ND< 3.78	U	ND< 3.36	U	ND< 15.3	U	3.86	P	ND< 3.53	U	ND< 3.14	U
Methoxychlor		ND< 3.38	U	ND< 3.01	U	15.1	P	2.03	JP	38.3	P	23.3	P	2.06	JP	ND< 3.14	U
P,P'-DDD	13000	ND< 3.38	U	ND< 3.01	U	5.31	P	ND< 3.36	U	11.6	J	6.27		ND< 3.53	U	ND< 3.14	U
P,P'-DDE	8900	ND< 3.38	U	ND< 3.01	U	14.9		1.87	J	8.75	J	5.55	P	ND< 3.53	U	ND< 3.14	U
P,P'-DDT	7900	ND< 3.38	U	ND< 3.01	U	45.6		4.28		13.4	JP	2.28	JP	1.78	JP	ND< 3.14	U
Toxaphene		ND< 33.8	U	ND< 30.1	U	ND< 37.8	U	ND< 33.6	U	ND< 153	U	ND< 31.1	U	ND< 35.3	U	ND< 31.4	U
Herbicides (µg/kg)																	
Silvex (2,4,5-TP)	100000	ND< 15	U	ND< 12	U	ND< 17	U	ND< 14	U					ND< 16	U	ND< 14	U
PCBs (mg/kg)																	
PCB-1016 (Aroclor 1016)		ND< 0.0338	U	ND< 0.0301	U	ND< 0.0378	U	ND< 0.0336	U	ND< 0.0305	U	ND< 0.0311	U	ND< 0.0353	U	ND< 0.0314	U
PCB-1221 (Aroclor 1221)		ND< 0.0338	U	ND< 0.0301	U	ND< 0.0378	U	ND< 0.0336	U	ND< 0.0305	U	ND< 0.0311	U	ND< 0.0353	U	ND< 0.0314	U
PCB-1232 (Aroclor 1232)		ND< 0.0338	U	ND< 0.0301	U	ND< 0.0378	U	ND< 0.0336	U	ND< 0.0305	U	ND< 0.0311	U	ND< 0.0353	U	ND< 0.0314	U
PCB-1242 (Aroclor 1242)		ND< 0.0338	U	ND< 0.0301	U	ND< 0.0378	U	ND< 0.0336	U	ND< 0.0305	U	ND< 0.0311	U	ND< 0.0353	U	ND< 0.0314	U
PCB-1248 (Aroclor 1248)		ND< 0.0338	U	ND< 0.0301	U	ND< 0.0378	U	ND< 0.0336	U	ND< 0.0305	U	ND< 0.0311	U	ND< 0.0353	U	ND< 0.0314	U
PCB-1254 (Aroclor 1254)		ND< 0.0338	U	ND< 0.0301	U	0.107		ND< 0.0336	U	ND< 0.0305	U	ND< 0.0311	U	ND< 0.0353	U	ND< 0.0314	U
PCB-1260 (Aroclor 1260)		ND< 0.0338	U	ND< 0.0301	U	0.244		ND< 0.0336	U	ND< 0.0305	U	ND< 0.0311	U	ND< 0.0353	U	ND< 0.0314	U
PCB-1262 (Aroclor 1262)		ND< 0.0338	U	ND< 0.0301	U	ND< 0.0378	U	ND< 0.0336	U	ND< 0.0305	U	ND< 0.0311	U	ND< 0.0353	U	ND< 0.0314	U
PCB-1268 (Aroclor 1268)		ND< 0.0338	U	ND< 0.0301	U	ND< 0.0378	U	ND< 0.0336	U	ND< 0.0305	U	ND< 0.0311	U	ND< 0.0353	U	ND< 0.0314	U

NOTES:

1. Soil sample analytical results are compared to the New York State Department of Environmental Conservation (NYSDEC) Title 6 of the official compilation of New York Codes, Rules, and Regulations (NYCRR) Part 375 Restricted Residential Soil Cleanup Objectives (RRSCOs).
2. RRSCO exceedances are in bold and highlighted yellow.
3. ND = Not Detected
4. Results shown as "ND" with Reporting Limits exceeding RRSCOs are in bold.
5. PCBs = Polychlorinated Biphenyls
6. µg/kg = micrograms per kilogram.
7. mg/kg = milligrams per kilogram.
8. Qualifier (Q) definitions are provided in the official lab reports.

Table 5A – VOCs in Soil – AOC-5

TABLE 5A: Volatile Organic Compounds (VOCs) in Soil
AOC-5 - Building 49 Former Gasoline Fueling Station
Soil Sample Results (non-QA/QC)
Hudson River Psychiatric Center - North BCP Site, Poughkeepsie, NY
PVE Sheffler File #560909

	Date Sampled	11/25/2014		12/15/2014		7/16/2014		7/16/2014		7/16/2014		7/16/2014		7/16/2014		7/16/2014		7/21/2014		7/21/2014	
	Location	FD-1		FD-1		FD-1		FD-1		FD-2		FD-2		FD-3		FD-3		FD-4		FD-4	
	Sample ID	FD-1 (0-2")		FD-1 2-24"		FD-1 1-3'		FD-1 14-16'		FD-2 1-3'		FD-2 13.5-16		FD-3 1-3'		FD-3 7-9'		FD-4 3-5'		FD-4 8-9'	
Analyte	RRSCOs	Result	Q	Result	Q	Result	Q	Result	Q	Result	Q	Result	Q	Result	Q	Result	Q	Result	Q	Result	Q
VOCs (µg/kg)																					
1,1,1-Trichloroethane	100000	ND< 2.03	U	ND< 1.90	U	ND< 2.32	U	ND< 1.88	U	ND< 1.65	U	ND< 1.92	U	ND< 2.32	U	ND< 1.79	U	ND< 1.73	UJL	ND< 1.97	UJL
1,1,2,2-Tetrachloroethane		ND< 2.03	U	ND< 1.90	U	ND< 2.32	U	ND< 1.88	U	ND< 1.65	U	ND< 1.92	U	ND< 2.32	U	ND< 1.79	U	ND< 1.73	UJL	ND< 1.97	UJL
1,1,2-Trichloro-1,2,2-Trifluoroethane		ND< 2.03	U	ND< 1.90	U	ND< 2.32	U	ND< 1.88	U	ND< 1.65	U	ND< 1.92	U	ND< 2.32	U	ND< 1.79	U	ND< 1.73	UJL	ND< 1.97	UJL
1,1,2-Trichloroethane		ND< 2.03	U	ND< 1.90	U	ND< 2.32	U	ND< 1.88	U	ND< 1.65	U	ND< 1.92	U	ND< 2.32	U	ND< 1.79	U	ND< 1.73	UJL	ND< 1.97	UJL
1,1-Dichloroethane	26000	ND< 2.03	U	ND< 1.90	U	ND< 2.32	U	ND< 1.88	U	ND< 1.65	U	ND< 1.92	U	ND< 2.32	U	ND< 1.79	U	ND< 1.73	UJL	ND< 1.97	UJL
1,1-Dichloroethene	100000	ND< 2.03	U	ND< 1.90	U	ND< 2.32	U	ND< 1.88	U	ND< 1.65	U	ND< 1.92	U	ND< 2.32	U	ND< 1.79	U	ND< 1.73	UJL	ND< 1.97	UJL
1,2,3-Trichlorobenzene		ND< 5.08	U	ND< 4.75	U	ND< 5.81	U	ND< 4.71	U	ND< 4.11	U	ND< 4.81	U	ND< 5.81	U	ND< 4.49	U	ND< 4.32	UJL	ND< 4.92	UJL
1,2,4-Trichlorobenzene		ND< 5.08	U	ND< 4.75	U	ND< 5.81	U	ND< 4.71	U	ND< 4.11	U	ND< 4.81	U	ND< 5.81	U	ND< 4.49	U	ND< 4.32	UJL	ND< 4.92	UJL
1,2,4-Trimethylbenzene	52000	ND< 2.03	U	ND< 1.90	U	ND< 2.32	U	ND< 1.88	U	ND< 1.65	U	ND< 1.92	U	ND< 2.32	U	ND< 1.79	U	ND< 1.73	UJL	ND< 1.97	UJL
1,2-Dibromo-3-Chloropropane		ND< 10.2	U	ND< 9.50	U	ND< 11.6	U	ND< 9.42	U	ND< 8.23	U	ND< 9.62	U	ND< 11.6	U	ND< 8.97	U	ND< 8.64	UJL	ND< 9.84	UJL
1,2-Dibromoethane (Ethylene Dibromide)		ND< 2.03	U	ND< 1.90	U	ND< 2.32	U	ND< 1.88	U	ND< 1.65	U	ND< 1.92	U	ND< 2.32	U	ND< 1.79	U	ND< 1.73	UJL	ND< 1.97	UJL
1,2-Dichlorobenzene	100000	ND< 2.03	U	ND< 1.90	U	ND< 2.32	U	ND< 1.88	U	ND< 1.65	U	ND< 1.92	U	ND< 2.32	U	ND< 1.79	U	ND< 1.73	UJL	ND< 1.97	UJL
1,2-Dichloroethane	3100	ND< 2.03	U	ND< 1.90	U	ND< 2.32	U	ND< 1.88	U	ND< 1.65	U	ND< 1.92	U	ND< 2.32	U	ND< 1.79	U	ND< 1.73	UJL	ND< 1.97	UJL
1,2-Dichloropropane		ND< 2.03	U	ND< 1.90	U	ND< 2.32	U	ND< 1.88	U	ND< 1.65	U	ND< 1.92	U	ND< 2.32	U	ND< 1.79	U	ND< 1.73	UJL	ND< 1.97	UJL
1,3,5-Trimethylbenzene (Mesitylene)	52000	ND< 2.03	U	ND< 1.90	U	ND< 2.32	U	ND< 1.88	U	ND< 1.65	U	ND< 1.92	U	ND< 2.32	U	ND< 1.79	U	ND< 1.73	UJL	ND< 1.97	UJL
1,3-Dichlorobenzene	49000	ND< 2.03	U	ND< 1.90	U	ND< 2.32	U	ND< 1.88	U	ND< 1.65	U	ND< 1.92	U	ND< 2.32	U	ND< 1.79	U	ND< 1.73	UJL	ND< 1.97	UJL
1,4-Dichlorobenzene	13000	ND< 2.03	U	ND< 1.90	U	ND< 2.32	U	ND< 1.88	U	ND< 1.65	U	ND< 1.92	U	ND< 2.32	U	ND< 1.79	U	ND< 1.73	UJL	ND< 1.97	UJL
1,4-Dioxane (P-Dioxane)	13000	ND< 20.3	U	ND< 19.0	U	ND< 23.2	U	ND< 18.8	U	ND< 16.5	U	ND< 19.2	U	ND< 23.2	U	ND< 17.9	U	ND< 17.3	UJL	ND< 19.7	UJL
2-Hexanone		ND< 5.08	U	ND< 4.75	U	ND< 5.81	U	ND< 4.71	U	ND< 4.11	U	ND< 4.81	U	ND< 5.81	U	ND< 4.49	U	ND< 4.32	UJL	ND< 4.92	UJL
Acetone	100000	ND< 10.2	U	ND< 9.50	U	11.3	J	ND< 9.42	U	7.63	J	ND< 9.62	U	ND< 11.6	U	ND< 8.97	U	ND< 8.64	UJL	ND< 9.84	UJL
Benzene	4800	ND< 2.03	U	ND< 1.90	U	ND< 2.32	U	ND< 1.88	U	ND< 1.65	U	ND< 1.92	U	ND< 2.32	U	ND< 1.79	U	ND< 1.73	UJL	ND< 1.97	UJL
Bromochloromethane		ND< 5.08	U	ND< 4.75	U	ND< 5.81	U	ND< 4.71	U	ND< 4.11	U	ND< 4.81	U	ND< 5.81	U	ND< 4.49	U	ND< 4.32	UJL	ND< 4.92	UJL
Bromodichloromethane		ND< 2.03	U	ND< 1.90	U	ND< 2.32	U	ND< 1.88	U	ND< 1.65	U	ND< 1.92	U	ND< 2.32	U	ND< 1.79	U	ND< 1.73	UJL	ND< 1.97	UJL
Bromoform		ND< 5.08	U	ND< 4.75	U	ND< 5.81	U	ND< 4.71	U	ND< 4.11	U	ND< 4.81	U	ND< 5.81	U	ND< 4.49	U	ND< 4.32	UJL	ND< 4.92	UJL
Bromomethane		ND< 2.03	U	ND< 1.90	U	ND< 2.32	U	ND< 1.88	U	ND< 1.65	U	ND< 1.92	U	ND< 2.32	U	ND< 1.79	U	ND< 1.73	UJL	ND< 1.97	UJL
Carbon Disulfide		ND< 2.03	U	ND< 1.90	U	ND< 2.32	U	ND< 1.88	U	ND< 1.65	U	ND< 1.92	U	ND< 2.32	U	ND< 1.79	U	ND< 1.73	UJL	ND< 1.97	UJL
Carbon Tetrachloride	2400	ND< 2.03	U	ND< 1.90	U	ND< 2.32	U	ND< 1.88	U	ND< 1.65	U	ND< 1.92	U	ND< 2.32	U	ND< 1.79	U	ND< 1.73	UJL	ND< 1.97	UJL
Chlorobenzene	100000	ND< 2.03	U	ND< 1.90	U	ND< 2.32	U	ND< 1.88	U	ND< 1.65	U	ND< 1.92	U	ND< 2.32	U	ND< 1.79	U	ND< 1.73	UJL	ND< 1.97	UJL
Chloroethane		ND< 2.03	U	ND< 1.90	U	ND< 2.32	U	ND< 1.88	U	ND< 1.65	U	ND< 1.92	U	ND< 2.32	U	ND< 1.79	U	ND< 1.73	UJL	ND< 1.97	UJL
Chloroform	49000	ND< 2.03	U	ND< 1.90	U	ND< 2.32	U	ND< 1.88	U	ND< 1.65	U	ND< 1.92	U	ND< 2.32	U	ND< 1.79	U	ND< 1.73	UJL	ND< 1.97	UJL
Chloromethane		ND< 2.03	U	ND< 1.90	U	ND< 2.32	U	ND< 1.88	U	ND< 1.65	U	ND< 1.92	U	ND< 2.32	U	ND< 1.79	U	ND< 1.73	UJL	ND< 1.97	UJL
Cis-1,2-Dichloroethylene	100000	ND< 2.03	U	ND< 1.90	U	ND< 2.32	U	ND< 1.88	U	ND< 1.65	U	ND< 1.92	U	ND< 2.32	U	ND< 1.79	U	ND< 1.73	UJL	ND< 1.97	UJL
Cis-1,3-Dichloropropene		ND< 2.03	U	ND< 1.90	U	ND< 2.32	U	ND< 1.88	U	ND< 1.65	U	ND< 1.92	U	ND< 2.32	U	ND< 1.79	U	ND< 1.73	UJL	ND< 1.97	UJL
Cyclohexane		ND< 10.2	U	ND< 9.50	U	ND< 11.6	U	ND< 9.42	U	ND< 8.23	U	ND< 9.62	U	ND< 11.6	U	ND< 8.97	U	ND< 8.64	UJL	ND< 9.84	UJL
Cymene		ND< 2.03	U	ND< 1.90	U	ND< 2.32	U	ND< 1.88	U	ND< 1.65	U	ND< 1.92	U	ND< 2.32	U	ND< 1.79	U	ND< 1.73	UJL	ND< 1.97	UJL
Dibromochloromethane		ND< 2.03	U	ND< 1.90	U	ND< 2.32	U	ND< 1.88	U	ND< 1.65	U	ND< 1.92	U	ND< 2.32	U	ND< 1.79	U	ND< 1.73	UJL	ND< 1.97	UJL
Dichlorodifluoromethane		ND< 2.03	U	ND< 1.90	U	ND< 2.32	U	ND< 1.88	U	ND< 1.65	U	ND< 1.92	U	ND< 2.32	U	ND< 1.79	U	ND< 1.73	UJL	ND< 1.97	UJL
Ethylbenzene	41000	ND< 2.03	U	ND< 1.90	U	ND< 2.32	U	ND< 1.88	U	ND< 1.65	U	ND< 1.92	U	ND< 2.32	U	ND< 1.79	U	ND< 1.73	UJL	ND< 1.97	UJL
Isopropylbenzene (Cumene)		ND< 2.03	U	ND< 1.90	U	ND< 2.32	U	ND< 1.88	U	ND< 1.65	U	ND< 1.92	U	ND< 2.32	U	ND< 1.79	U	ND< 1.73	UJL	ND< 1.97	UJL
Methyl Acetate		ND< 2.03	U	ND< 1.90	U	ND< 2.32	U	ND< 1.88	U	ND< 1.65	U	ND< 1.92	U	ND< 2.32	U	ND< 1.79	U	ND< 1.73	UJL	ND< 1.97	UJL
Methyl Ethyl Ketone (2-Butanone)	100000	ND< 10.2	U	ND< 9.50	U	ND< 11.6	U	ND< 9.42	U	ND< 8.23	U	ND< 9.62	U	ND< 11.6	U	ND< 8.97	U	ND< 8.64	UJL	ND< 9.84	UJL
Methyl Isobutyl Ketone (4-Methyl-2-Pentanone)		ND< 5.08	U	ND< 4.75	U	ND< 5.81	U	ND< 4.71	U	ND< 4.11	U	ND< 4.81	U	ND< 5.81	U	ND< 4.49	U	ND< 4.32	UJL	ND< 4.92	UJL
Methyl Tert-Butyl Ether (MTBE)	100000	ND< 2.03	U	ND< 1.90	U	ND< 2.32	U	ND< 1.88	U	ND< 1.65	U	ND< 1.92	U	ND< 2.32	U	ND< 1.79	U	ND< 1.73	UJL	ND< 1.97	UJL
Methylcyclohexane		ND< 2.03	U	ND< 1.90	U	ND< 2.32	U	ND< 1.88	U	ND< 1.65	U	ND< 1.92	U	ND< 2.32	U	ND< 1.79	U	ND< 1.73	UJL	ND< 1.97	UJL
Methylene Chloride	100000	ND< 5.08	U	ND< 4.75	U	ND< 5.81	U	ND< 4.71	U	ND< 4.11	U	ND< 4.81	U	ND< 5.81	U	ND< 4.49	U	ND< 4.32	UJL	ND< 4.92	UJL
M-P-Xylene		ND< 2.03	U	ND< 1.90	U	ND< 2.32	U	ND< 1.88	U	ND< 1.65	U	ND< 1.92	U	ND< 2.32	U	ND< 1.79	U	ND< 1.73	UJL	ND< 1.97	UJL
Naphthalene	100000	ND< 5.08	U	ND< 4.75	U	ND< 5.81	U	ND< 4.71	U	ND< 4.11	U	ND< 4.81	U	ND< 5.81	U	ND< 4.49	U	ND< 4.32	UJL	ND< 4.92	UJL
N-Butylbenzene	100000	ND< 2.03	U	ND< 1.90	U	ND< 2.32	U	ND< 1.88	U	ND< 1.65	U	ND< 1.92	U	ND< 2.32	U	ND< 1.79	U	ND< 1.73	UJL	ND< 1.97	UJL
N-Propylbenzene	100000	ND< 2.03	U	ND< 1.90	U	ND< 2.32	U	ND< 1.88	U	ND< 1.65	U	ND< 1.92	U	ND< 2.32	U	ND< 1.79	U	ND< 1.73	UJL	ND< 1.97	UJL
O-Xylene (1,2-Dimethylbenzene)		ND< 2.03	U	ND< 1.90	U	ND< 2.32	U	ND< 1.88	U	ND< 1.65	U	ND< 1.92	U	ND< 2.32	U	ND< 1.79	U	ND< 1.73	UJL	ND< 1.97	UJL
Sec-Butylbenzene	100000	ND< 2.03	U	ND< 1.90	U	ND< 2.32	U	ND< 1.88	U	ND< 1.65	U	ND< 1.92	U	ND< 2.32	U	ND< 1.79	U	ND< 1.73	UJL	ND< 1.97	UJL
Styrene		ND< 5.08	U	ND< 4.75	U	ND< 5.81	U	ND< 4.71	U	ND< 4.11	U	ND< 4.81	U	ND< 5.81	U	ND< 4.49	U	ND< 4.32	UJL	ND< 4.92	UJL
T-Butylbenzene	100000	ND< 2.03	U	ND< 1.90	U	ND< 2.32	U	ND< 1.88	U	ND< 1.65	U	ND< 1.92	U	ND< 2.32	U	ND< 1.79	U	ND< 1.73	UJL	ND< 1.97	UJL
Tetrachloroethylene (PCE)	19000	ND< 2.03	U	ND< 1.90	U	ND< 2.32	U	ND< 1.88	U	ND< 1.65	U	ND< 1.92	U	ND< 2.32	U	ND< 1.79	U	ND< 1.73	UJL	ND< 1.97	UJL
Toluene	100000	ND< 2.03	U	ND< 1.90	U	ND< 2.32	U	ND< 1.88	U	ND< 1.65	U	ND< 1.92	U	ND< 2.32	U	ND< 1.79	U	ND< 1.73	UJL	ND< 1.97	UJL
Trans-1,2-Dichloroethene	100000	ND< 2.03	U	ND< 1.90	U	ND< 2.32	U	ND< 1.88	U	ND< 1.65	U	ND< 1.92	U	ND< 2.32	U	ND< 1.79	U	ND< 1.73	UJL	ND< 1.97	UJL
Trans-1,3-Dichloropropene		ND< 2.03	U	ND< 1.90	U	ND< 2.32	U	ND< 1.88	U	ND< 1.65	U	ND< 1.92	U	ND< 2.32	U	ND< 1.79	U	ND< 1.73	UJL	ND< 1.97	UJL
Trichloroethylene (TCE)	21000	ND< 2.03	U	ND< 1.90	U	ND< 2.32	U	ND< 1.88	U	ND< 1.65	U	ND< 1.92	U	ND< 2.32	U	ND< 1.79	U	ND< 1.73	UJL	ND< 1.97	UJL
Trichlorofluoromethane		ND< 2.03	U	ND< 1.90	U	ND< 2.32	U	ND< 1.88	U	ND< 1.65	U	ND< 1.92	U	ND< 2.32	U	ND< 1.79	U	ND< 1.73	UJL	ND< 1.97	UJL
Vinyl Chloride	900	ND< 2.03	U	ND< 1.90	U	ND< 2.32	U	ND< 1.88	U	ND< 1.65	U	ND< 1.92	U	ND< 2.32	U	ND< 1.79	U	ND< 1.73	UJL	ND< 1.97	UJL

NOTES:

1. Soil sample analytical results are compared to the New York State Department of Environmental Conservation (NYSDEC) Title 6 of the official compilation of New York Codes, Rules, and Regulations (NYCRR) Part 375 Restricted Residential Soil Cleanup Objectives (RRSCOs).
2. RRSCO exceedances are in bold and highlighted yellow.
3. ND = Not Detected
4. Results shown as "ND" with Reporting Limits exceeding RRSCOs are in bold.
5. VOCs = Volatile Organic Compounds
6. µg/kg = micrograms per kilogram.
7. Qualifier (Q) definitions are provided in the official lab reports.

Table 5B – SVOCs in Soil – AOC-5

TABLE 5B: Semi-Volatile Organic Compounds (SVOCs) in Soil
AOC-5 - Building 49 Former Gasoline Fueling Station
Soil Sample Results (non-QA/QC)
Hudson River Psychiatric Center - North BCP Site, Poughkeepsie, NY
PVE Sheffler File #560909

	Date Sampled	11/25/2014		12/15/2014		7/16/2014		7/16/2014		7/16/2014		7/16/2014		7/16/2014		7/16/2014		7/21/2014		7/21/2014	
	Location	FD-1		FD-1		FD-1		FD-1		FD-2		FD-2		FD-3		FD-3		FD-4		FD-4	
	Sample ID	FD-1 (0-2")		FD-1 2-24"		FD-1 1-3'		FD-1 14-16'		FD-2 1-3'		FD-2 13.5-16		FD-3 1-3'		FD-3 7-9'		FD-4 3-5'		FD-4 8-9'	
Analyte	RRSCOs	Result	Q	Result	Q	Result	Q	Result	Q	Result	Q	Result	Q	Result	Q	Result	Q	Result	Q	Result	Q
SVOCs (µg/kg)																					
1,2,4,5-Tetrachlorobenzene		ND< 319	U	ND< 342	U	ND< 322	U	ND< 309	U	ND< 322	U	ND< 313	U	ND< 363	U	ND< 346	U	ND< 329	U	ND< 306	U
1,2,4-Trichlorobenzene		ND< 319	U	ND< 342	U	ND< 322	U	ND< 309	U	ND< 322	U	ND< 313	U	ND< 363	U	ND< 346	U	ND< 329	U	ND< 306	U
1,2-Dichlorobenzene	100000	ND< 319	U	ND< 342	U	ND< 322	U	ND< 309	U	ND< 322	U	ND< 313	U	ND< 363	U	ND< 346	U	ND< 329	U	ND< 306	U
1,3-Dichlorobenzene	49000	ND< 319	U	ND< 342	U	ND< 322	U	ND< 309	U	ND< 322	U	ND< 313	U	ND< 363	U	ND< 346	U	ND< 329	U	ND< 306	U
1,4-Dichlorobenzene	13000	ND< 319	U	ND< 342	U	ND< 322	U	ND< 309	U	ND< 322	U	ND< 313	U	ND< 363	U	ND< 346	U	ND< 329	U	ND< 306	U
2,2-Oxybis(2-Chloropropane)		ND< 319	U	ND< 342	U	ND< 322	U	ND< 309	U	ND< 322	U	ND< 313	U	ND< 363	U	ND< 346	U	ND< 329	U	ND< 306	U
2,3,4,6-Tetrachlorophenol		ND< 319	U	ND< 342	U	ND< 322	U	ND< 309	U	ND< 322	U	ND< 313	U	ND< 363	U	ND< 346	U	ND< 329	U	ND< 306	U
2,4,5-Trichlorophenol		ND< 638	U	ND< 683	U	ND< 644	U	ND< 618	U	ND< 643	U	ND< 626	U	ND< 725	U	ND< 693	U	ND< 658	U	ND< 612	U
2,4,6-Trichlorophenol		ND< 319	U	ND< 342	U	ND< 322	U	ND< 309	U	ND< 322	U	ND< 313	U	ND< 363	U	ND< 346	U	ND< 329	U	ND< 306	U
2,4-Dichlorophenol		ND< 319	U	ND< 342	U	ND< 322	U	ND< 309	U	ND< 322	U	ND< 313	U	ND< 363	U	ND< 346	U	ND< 329	U	ND< 306	U
2,4-Dimethylphenol		ND< 319	U	ND< 342	U	ND< 322	U	ND< 309	U	ND< 322	U	ND< 313	U	ND< 363	U	ND< 346	U	ND< 329	U	ND< 306	U
2,4-Dinitrophenol		ND< 638	U	ND< 683	U	ND< 644	U	ND< 618	U	ND< 643	U	ND< 626	U	ND< 725	U	ND< 693	U	ND< 658	U	ND< 612	U
2,4-Dinitrotoluene		ND< 319	U	ND< 342	U	ND< 322	U	ND< 309	U	ND< 322	U	ND< 313	U	ND< 363	U	ND< 346	U	ND< 329	U	ND< 306	U
2,6-Dinitrotoluene		ND< 319	U	ND< 342	U	ND< 322	U	ND< 309	U	ND< 322	U	ND< 313	U	ND< 363	U	ND< 346	U	ND< 329	U	ND< 306	U
2-Chloronaphthalene		ND< 319	U	ND< 342	U	ND< 322	U	ND< 309	U	ND< 322	U	ND< 313	U	ND< 363	U	ND< 346	U	ND< 329	U	ND< 306	U
2-Chlorophenol		ND< 319	U	ND< 342	U	ND< 322	U	ND< 309	U	ND< 322	U	ND< 313	U	ND< 363	U	ND< 346	U	ND< 329	U	ND< 306	U
2-Methylnaphthalene		ND< 319	U	ND< 342	U	ND< 322	U	ND< 309	U	ND< 322	U	ND< 313	U	491		ND< 346	U	ND< 329	U	ND< 306	U
2-Methylphenol (O-Cresol)	100000	ND< 319	U	ND< 342	U	ND< 322	U	ND< 309	U	ND< 322	U	ND< 313	U	ND< 363	U	ND< 346	U	ND< 329	U	ND< 306	U
2-Nitroaniline		ND< 638	U	ND< 683	U	ND< 644	U	ND< 618	U	ND< 643	U	ND< 626	U	ND< 725	U	ND< 693	U	ND< 658	U	ND< 612	U
2-Nitrophenol		ND< 319	U	ND< 342	U	ND< 322	U	ND< 309	U	ND< 322	U	ND< 313	U	ND< 363	U	ND< 346	U	ND< 329	U	ND< 306	U
3,3'-Dichlorobenzidine		ND< 319	U	ND< 342	U	ND< 322	U	ND< 309	U	ND< 322	U	ND< 313	U	ND< 363	U	ND< 346	U	ND< 329	U	ND< 306	U
3-Methylphenol	100000	ND< 319	U	ND< 342	U	ND< 322	U	ND< 309	U	ND< 322	U	ND< 313	U	ND< 363	U	ND< 346	U	ND< 329	U	ND< 306	U
3-Nitroaniline		ND< 638	U	ND< 683	U	ND< 644	U	ND< 618	U	ND< 643	U	ND< 626	U	ND< 725	U	ND< 693	U	ND< 658	U	ND< 612	U
4,6-Dinitro-2-Methylphenol		ND< 638	U	ND< 683	U	ND< 644	U	ND< 618	U	ND< 643	U	ND< 626	U	ND< 725	U	ND< 693	U	ND< 658	U	ND< 612	U
4-Bromophenyl Phenyl Ether		ND< 319	U	ND< 342	U	ND< 322	U	ND< 309	U	ND< 322	U	ND< 313	U	ND< 363	U	ND< 346	U	ND< 329	U	ND< 306	U
4-Chloro-3-Methylphenol		ND< 319	U	ND< 342	U	ND< 322	U	ND< 309	U	ND< 322	U	ND< 313	U	ND< 363	U	ND< 346	U	ND< 329	U	ND< 306	U
4-Chloroaniline		ND< 319	U	ND< 342	U	ND< 322	U	ND< 309	U	ND< 322	U	ND< 313	U	ND< 363	U	ND< 346	U	ND< 329	U	ND< 306	U
4-Chlorophenyl Phenyl Ether		ND< 319	U	ND< 342	U	ND< 322	U	ND< 309	U	ND< 322	U	ND< 313	U	ND< 363	U	ND< 346	U	ND< 329	U	ND< 306	U
4-Nitroaniline		ND< 638	U	ND< 683	U	ND< 644	U	ND< 618	U	ND< 643	U	ND< 626	U	ND< 725	U	ND< 693	U	ND< 658	U	ND< 612	U
4-Nitrophenol		ND< 638	U	ND< 683	U	ND< 644	U	ND< 618	U	ND< 643	U	ND< 626	U	ND< 725	U	ND< 693	U	ND< 658	U	ND< 612	U
Acenaphthene	100000	ND< 319	U	ND< 342	U	ND< 322	U	ND< 309	U	ND< 322	U	ND< 313	U	ND< 363	U	ND< 346	U	ND< 329	U	ND< 306	U
Acenaphthylene	100000	ND< 319	U	ND< 342	U	ND< 322	U	ND< 309	U	ND< 322	U	ND< 313	U	347	J	ND< 346	U	ND< 329	U	ND< 306	U
Acetophenone		ND< 319	U	ND< 342	U	ND< 322	U	ND< 309	U	ND< 322	U	ND< 313	U	ND< 363	U	ND< 346	U	ND< 329	U	ND< 306	U
Anthracene	100000	ND< 319	U	ND< 342	U	ND< 322	U	ND< 309	U	ND< 322	U	ND< 313	U	ND< 363	U	ND< 346	U	ND< 329	U	ND< 306	U
Atrazine		ND< 319	U	ND< 342	U	ND< 322	U	ND< 309	U	ND< 322	U	ND< 313	U	ND< 363	U	ND< 346	U	ND< 329	U	ND< 306	U
Benzaldehyde		ND< 319	U	ND< 342	U	ND< 322	U	ND< 309	U	ND< 322	U	ND< 313	U	ND< 363	U	ND< 346	U	ND< 329	U	ND< 306	U
Benzo(A)Anthracene	1000	ND< 319	U	ND< 342	U	ND< 322	U	ND< 309	U	ND< 322	U	ND< 313	U	516		ND< 346	U	ND< 329	U	ND< 306	U
Benzo(A)Pyrene	1000	ND< 319	U	ND< 342	U	ND< 322	U	ND< 309	U	ND< 322	U	ND< 313	U	495		ND< 346	U	ND< 329	U	ND< 306	U
Benzo(B)Fluoranthene	1000	ND< 319	U	ND< 342	U	ND< 322	U	ND< 309	U	ND< 322	U	ND< 313	U	672		ND< 346	U	ND< 329	U	ND< 306	U
Benzo(G,H,I)Perylene	100000	ND< 319	U	ND< 342	U	ND< 322	U	ND< 309	U	ND< 322	U	ND< 313	U	414		ND< 346	U	ND< 329	U	ND< 306	U
Benzo(K)Fluoranthene	3900	ND< 319	U	ND< 342	U	ND< 322	U	ND< 309	U	ND< 322	U	ND< 313	U	394		ND< 346	U	ND< 329	U	ND< 306	U
Benzyl Butyl Phthalate		ND< 319	U	ND< 342	U	ND< 322	U	ND< 309	U	ND< 322	U	ND< 313	U	ND< 363	U	ND< 346	U	ND< 329	U	ND< 306	U
Biphenyl (Diphenyl)		ND< 319	U	ND< 342	U	ND< 322	U	ND< 309	U	ND< 322	U	ND< 313	U	ND< 363	U	ND< 346	U	ND< 329	U	ND< 306	U
Bis(2-Chloroethoxy) Methane		ND< 319	U	ND< 342	U	ND< 322	U	ND< 309	U	ND< 322	U	ND< 313	U	ND< 363	U	ND< 346	U	ND< 329	U	ND< 306	U
Bis(2-Chloroethyl) Ether (2-Chloroethyl Ether)		ND< 319	U	ND< 342	U	ND< 322	U	ND< 309	U	ND< 322	U	ND< 313	U	ND< 363	U	ND< 346	U	ND< 329	U	ND< 306	U
Bis(2-Ethylhexyl) Phthalate		ND< 319	U	ND< 342	U	ND< 322	U	ND< 309	U	ND< 322	U	ND< 313	U	ND< 363	U	ND< 346	U	ND< 329	U	ND< 306	U
Caprolactam		ND< 319	U	ND< 342	U	ND< 322	U	ND< 309	U	ND< 322	U	ND< 313	U	ND< 363	U	ND< 346	U	ND< 329	U	ND< 306	U
Carbazole		ND< 319	U	ND< 342	U	ND< 322	U	ND< 309	U	ND< 322	U	ND< 313	U	ND< 363	U	ND< 346	U	ND< 329	U	ND< 306	U
Chrysene	3900	ND< 319	U	ND< 342	U	ND< 322	U	ND< 309	U	ND< 322	U	ND< 313	U	682		ND< 346	U	ND< 329	U	ND< 306	U
Dibenz(A,H)Anthracene	**330**	ND< 319	U	**ND< 342**	**U**	ND< 322	U	ND< 309	U	ND< 322	U	ND< 313	U	**ND< 363**	**U**	**ND< 346**	**U**	ND< 329	U	ND< 306	U
Dibenzofuran	59000	ND< 319	U	ND< 342	U	ND< 322	U	ND< 309	U	ND< 322	U	ND< 313	U	ND< 363	U	ND< 346	U	ND< 329	U	ND< 306	U
Diethyl Phthalate		ND< 319	U	ND< 342	U	ND< 322	U	ND< 309	U	ND< 322	U	ND< 313	U	ND< 363	U	ND< 346	U	ND< 329	U	ND< 306	U
Dimethyl Phthalate		ND< 638	U	ND< 683	U	ND< 644	U	ND< 618	U	ND< 643	U	ND< 626	U	ND< 725	U	ND< 693	U	ND< 658	U	ND< 612	U
Di-N-Butyl Phthalate		ND< 319	U	ND< 342	U	ND< 322	U	ND< 309	U	ND< 322	U	ND< 313	U	ND< 363	U	ND< 346	U	ND< 329	U	ND< 306	U
Di-N-Octylphthalate		ND< 319	U	ND< 342	U	ND< 322	U	ND< 309	U	ND< 322	U	ND< 313	U	ND< 363	U	ND< 346	U	ND< 329	U	ND< 306	U
Fluoranthene	100000	ND< 319	U	ND< 342	U	ND< 322	U	ND< 309	U	ND< 322	U	ND< 313	U	1320		ND< 346	U	ND< 329	U	ND< 306	U
Fluorene	100000	ND< 319	U	ND< 342	U	ND< 322	U	ND< 309	U	ND< 322	U	ND< 313	U	ND< 363	U	ND< 346	U	ND< 329	U	ND< 306	U
Hexachlorobenzene	1200	ND< 319	U	ND< 342	U	ND< 322	U	ND< 309	U	ND< 322	U	ND< 313	U	ND< 363	U	ND< 346	U	ND< 329	U	ND< 306	U
Hexachlorobutadiene		ND< 319	U	ND< 342	U	ND< 322	U	ND< 309	U	ND< 322	U	ND< 313	U	ND< 363	U	ND< 346	U	ND< 329	U	ND< 306	U
Hexachlorocyclopentadiene		ND< 319	U	ND< 342	U	ND< 322	U	ND< 309	U	ND< 322	U	ND< 313	U	ND< 363	U	ND< 346	U	ND< 329	U	ND< 306	U
Hexachloroethane		ND< 319	U	ND< 342	U	ND< 322	U	ND< 309	U	ND< 322	U	ND< 313	U	ND< 363	U	ND< 346	U	ND< 329	U	ND< 306	U
Indeno(1,2,3-C,D)Pyrene	500	ND< 319	U	ND< 342	U	ND< 322	U	ND< 309	U	ND< 322	U	ND< 313	U	431		ND< 346	U	ND< 329	U	ND< 306	U
Isophorone		ND< 319	U	ND< 342	U	ND< 322	U	ND< 309	U	ND< 322	U	ND< 313	U	ND< 363	U	ND< 346	U	ND< 329	U	ND< 306	U
Naphthalene	100000	ND< 319	U	ND< 342	U	ND< 322	U	ND< 309	U	ND< 322	U	ND< 313	U	355	J	ND< 346	U	ND< 329	U	ND< 306	U
Nitrobenzene		ND< 319	U	ND< 342	U	ND< 322	U	ND< 309	U	ND< 322	U	ND< 313	U	ND< 363	U	ND< 346	U	ND< 329	U	ND< 306	U
N-Nitrosodi-N-Propylamine		ND< 319	U	ND< 342	U	ND< 322	U	ND< 309	U	ND< 322	U	ND< 313	U	ND< 363	U	ND< 346	U	ND< 329	U	ND< 306	U
N-Nitrosodiphenylamine		ND< 319	U	ND< 342	U	ND< 322	U	ND< 309	U	ND< 322	U	ND< 313	U	ND< 363	U	ND< 346	U	ND< 329	U	ND< 306	U
Pentachlorophenol	6700	ND< 638	U	ND< 683	U	ND< 644	U	ND< 618	U	ND< 643	U	ND< 626	U	ND< 725	U	ND< 693	U	ND< 658	U	ND< 612	U
Phenanthrene	100000	ND< 319	U	ND< 342	U	ND< 322	U	ND< 309	U	ND< 322	U	ND< 313	U	694		ND< 346	U	ND< 329	U	ND< 306	U
Phenol	100000	ND< 319	U	ND< 342	U	ND< 322	U	ND< 309	U	ND< 322	U	ND< 313	U	ND< 363	U	ND< 346	U	ND< 329	U	ND< 306	U
Pyrene	100000	ND< 319	U	ND< 342	U	ND< 322	U	ND< 309	U	ND< 322	U	ND< 313	U	1040		ND< 346	U	ND< 329	U	ND< 306	U

NOTES:

1. Soil sample analytical results are compared to the New York State Department of Environmental Conservation (NYSDEC) Title 6 of the official compilation of New York Codes, Rules, and Regulations (NYCRR) Part 375 Restricted Residential Soil Cleanup Objectives (RRSCOs).
2. RRSCO exceedances are in bold and highlighted yellow.
3. ND = Not Detected
4. Results shown as "ND" with Reporting Limits exceeding RRSCOs are in bold.
5. SVOCs = Semi-Volatile Organic Compounds
6. µg/kg = micrograms per kilogram.
7. Qualifier (Q) definitions are provided in the official lab reports.

Table 5C – Total Metals in Soil – AOC-5

TABLE 5C: Total Metals in Soil

AOC-5 - Building 49 Former Gasoline Fueling Station

Soil Sample Results (non-QA/QC)

Hudson River Psychiatric Center - North BCP Site, Poughkeepsie, NY

PVE Sheffler File #560909

	Date Sampled	11/25/2014		12/15/2014		7/16/2014		7/16/2014		7/16/2014		7/16/2014		7/16/2014		7/16/2014	
	Location	FD-1		FD-1		FD-1		FD-1		FD-2		FD-2		FD-3		FD-3	
	Sample ID	FD-1 (0-2")		FD-1 2-24"		FD-1 1-3'		FD-1 14-16'		FD-2 1-3'		FD-2 13.5-16		FD-3 1-3'		FD-3 7-9'	
Analyte	RRSCOs	Result	Q	Result	Q	Result	Q	Result	Q	Result	Q	Result	Q	Result	Q	Result	Q
Metals (mg/kg)																	
Aluminum						15700		12700		14000		12100		14600		13700	
Antimony						ND< 7.06	U	3.76	J	ND< 6.85	U	ND< 6.02	U	ND< 7.35	U	ND< 7.59	U
Arsenic	**16**	8.91		8.43		5.47		10.0		6.02		8.31		**23.7**		6.88	
Barium	400	38.4		88.5		89.4		30.2		65.7		28.9		65.7		45.1	
Beryllium	72	0.367	J	0.678		0.734		0.419	J	0.591		0.447	J	0.869		0.532	J
Cadmium	4.3	ND< 0.582	U	0.355	J	ND< 0.588	U	0.438	J	ND< 0.571	U	0.505		0.894		ND< 0.632	U
Calcium						1320		3600		6730		1520		15900		685	
Chromium, Hexavalent	110	ND< 1.1	U	ND< 1.2	U	ND< 0.5	U	ND< 0.4	U	ND< 0.4	U	0.700		ND< 0.5	U	ND< 0.5	U
Chromium, Total		13.0		16.0		13.9		15.5		15.7		15.0		19.7		15.3	
Cobalt						8.96		15.2		10.5		12.6		17.2		11.4	
Copper	270	31.0		21.3		18.0		45.7		29.4		48.6		44.4		37.1	
Cyanide	27					ND< 0.57	U	ND< 0.54	U	ND< 0.56	U	ND< 0.55	U	ND< 0.59	U	ND< 0.60	U
Cyanide	27	ND< 0.474	U	ND< 0.512	U												
Iron						19500		28500		22800		27600		33500		24900	
Lead	400	69.7		62.9		43.6		15.5		89.4		15.1		227		13.6	
Magnesium						3330		6520		4440		6850	M	12600		4370	
Manganese	2000	425		909		1040		1430		840		987	M	993		699	
Mercury	0.81	0.0950		0.114		0.102		0.0338		0.0588		0.0559		0.181		0.0540	
Nickel	310	20.8		21.0		19.7		33.5		22.1		32.6		38.5		22.1	
Potassium						746		1140		994		898		971		1210	
Selenium	180	ND< 1.16	U	ND< 1.16	U	1.07	J	ND< 1.06	U	0.838	J	0.775	J	8.54		5.77	
Silver	180	ND< 1.16	U	ND< 1.16	U	ND< 1.18	U	ND< 1.06	U	ND< 1.14	U	ND< 1.00	U	ND< 1.22	U	ND< 1.26	U
Sodium						ND< 294	U	ND< 266	U	ND< 285	U	ND< 251	U	ND< 306	U	ND< 316	U
Thallium						ND< 2.94	U	ND< 2.66	U	ND< 2.85	U	ND< 2.51	U	ND< 3.06	U	ND< 3.16	U
Vanadium						17.6		16.4		19.4		15.9		30.7		17.7	
Zinc	10000	73.5		103		75.8		127		90.8		127		152		77.2	

NOTES:

1. Soil sample analytical results are compared to the New York State Department of Environmental Conservation (NYSDEC) Title 6 of the official compilation of New York Codes, Rules, and Regulations (NYCRR) Part 375 Restricted Residential Soil Cleanup Objectives (RRSCOs).
2. RRSCO exceedances are in bold and highlighted yellow.
3. ND = Not Detected
4. Results shown as "ND" with Reporting Limits exceeding RRSCOs are in bold.
5. mg/kg = milligrams per kilogram.
6. Qualifier (Q) definitions are provided in the official lab reports.

TABLE 5C: Total Metals in Soil

AOC-5 - Building 49 Former Gasoline Fueling Station

Soil Sample Results (non-QA/QC)

Hudson River Psychiatric Center - North BCP Site, Poughkeepsie, NY

PVE Sheffler File #560909

	Date Sampled	7/21/2014		7/21/2014	
	Location	FD-4		FD-4	
	Sample ID	FD-4 3-5'		FD-4 8-9'	
Analyte	RRSCOs	Result	Q	Result	Q
Metals (mg/kg)					
Aluminum		15100		15900	
Antimony		4.46	J	5.59	JM
Arsenic	**16**	5.40		10.0	D
Barium	400	41.5		28.5	
Beryllium	72	0.520	J	0.510	J
Cadmium	4.3	ND< 0.588	U	0.404	J
Calcium		684		1870	M
Chromium, Hexavalent	110	ND< 1.2	U	ND< 1.1	U
Chromium, Total		15.0		19.2	
Cobalt		10.1		16.5	
Copper	270	22.2		52.5	
Cyanide	27	ND< 0.49	U	ND< 0.49	U
Cyanide	27				
Iron		24100		37100	
Lead	400	11.8		22.6	
Magnesium		4560		7810	M
Manganese	2000	626		1810	DM
Mercury	0.81	0.0330		0.0429	
Nickel	310	21.4		32.6	
Potassium		825		1110	
Selenium	180	7.47		9.38	
Silver	180	ND< 1.18	U	0.611	J
Sodium		ND< 294	U	ND< 257	U
Thallium		ND< 2.94	U	ND< 2.57	U
Vanadium		18.0		18.8	
Zinc	10000	75.7		113	

NOTES:

1. Soil sample analytical results are compared to the New York State Department of Environmental Conservation (NYSDEC) Title 6 of the official compilation of New York Codes, Rules, and Regulations (NYCRR) Part 375 Restricted Residential Soil Cleanup Objectives (RRSCOs).
2. RRSCO exceedances are in bold and highlighted yellow.
3. ND = Not Detected
4. Results shown as "ND" with Reporting Limits exceeding RRSCOs are in bold.
5. mg/kg = milligrams per kilogram.
6. Qualifier (Q) definitions are provided in the official lab reports.

Table 5D – Pesticides, Herbicides, and PCBs in Soil – AOC-5

TABLE 5D: Pesticides, Herbicides, and PCBs in Soil
AOC-5 - Building 49 Former Gasoline Fueling Station
Soil Sample Results (non-QA/QC)
Hudson River Psychiatric Center - North BCP Site, Poughkeepsie, NY
PVE Sheffler File #560909

	Date Sampled	11/25/2014		12/15/2014		7/16/2014		7/16/2014	
	Location	FD-1		FD-1		FD-1		FD-1	
	Sample ID	FD-1 (0-2")		FD-1 2-24"		FD-1 1-3'		FD-1 14-16'	
Analyte	RRSCOs	Result	Q	Result	Q	Result	Q	Result	Q
Pesticides (µg/kg)									
Aldrin	97	ND< 3.18	U	ND< 3.41	U	ND< 3.22	U	ND< 3.11	U
Alpha Bhc (Alpha Hexachlorocyclohexane)	480	ND< 3.18	U	ND< 3.41	U	ND< 3.22	U	ND< 3.11	U
Alpha Chlordane	4200	ND< 3.18	U	ND< 3.41	U	1.78	J	ND< 3.11	U
Alpha Endosulfan	24000	ND< 3.18	U	1.82	JP	ND< 3.22	U	ND< 3.11	U
Beta Bhc (Beta Hexachlorocyclohexane)	360	ND< 3.18	U	ND< 3.41	U	ND< 3.22	U	ND< 3.11	U
Beta Endosulfan	24000	ND< 3.18	U	ND< 3.41	U	ND< 3.22	U	ND< 3.11	U
Delta BHC (Delta Hexachlorocyclohexane)	100000	ND< 3.18	U	ND< 3.41	U	ND< 3.22	U	ND< 3.11	U
Dieldrin	200	ND< 3.18	U	ND< 3.41	U	ND< 3.22	U	ND< 3.11	U
Endosulfan Sulfate	24000	ND< 3.18	U	ND< 3.41	U	ND< 3.22	U	ND< 3.11	U
Endrin	11000	ND< 3.18	U	ND< 3.41	U	ND< 3.22	U	ND< 3.11	U
Endrin Aldehyde		ND< 3.18	U	8.45		ND< 3.22	U	ND< 3.11	U
Endrin Ketone		ND< 3.18	U	ND< 3.41	U	ND< 3.22	U	ND< 3.11	U
Gamma Bhc (Lindane)	1300	ND< 3.18	U	ND< 3.41	U	ND< 3.22	U	ND< 3.11	U
Gamma Chlordane		ND< 3.18	U	ND< 3.41	U	ND< 3.22	U	ND< 3.11	U
Heptachlor	2100	ND< 3.18	U	ND< 3.41	U	ND< 3.22	U	ND< 3.11	U
Heptachlor Epoxide		ND< 3.18	U	ND< 3.41	U	ND< 3.22	U	ND< 3.11	U
Methoxychlor		ND< 3.18	U	ND< 3.41	U	ND< 3.22	U	ND< 3.11	U
P,P'-DDD	13000	9.25		ND< 3.41	U	ND< 3.22	U	ND< 3.11	U
P,P'-DDE	8900	51.9		ND< 3.41	U	ND< 3.22	U	ND< 3.11	U
P,P'-DDT	7900	40.4		2.19	J	ND< 3.22	U	ND< 3.11	U
Toxaphene		ND< 31.8	U	ND< 34.1	U	ND< 32.2	U	ND< 31.1	U
Herbicides (µg/kg)									
Silvex (2,4,5-TP)	100000	ND< 14	U	ND< 14	U	ND< 14	U	ND< 13	U
PCBs (mg/kg)									
PCB-1016 (Aroclor 1016)		ND< 0.0318	U	ND< 0.0341	U	ND< 0.0311	U	ND< 0.0308	U
PCB-1221 (Aroclor 1221)		ND< 0.0318	U	ND< 0.0341	U	ND< 0.0311	U	ND< 0.0308	U
PCB-1232 (Aroclor 1232)		ND< 0.0318	U	ND< 0.0341	U	ND< 0.0311	U	ND< 0.0308	U
PCB-1242 (Aroclor 1242)		ND< 0.0318	U	ND< 0.0341	U	ND< 0.0311	U	ND< 0.0308	U
PCB-1248 (Aroclor 1248)		ND< 0.0318	U	ND< 0.0341	U	ND< 0.0311	U	ND< 0.0308	U
PCB-1254 (Aroclor 1254)		ND< 0.0318	U	ND< 0.0341	U	ND< 0.0311	U	ND< 0.0308	U
PCB-1260 (Aroclor 1260)		ND< 0.0318	U	ND< 0.0341	U	ND< 0.0311	U	ND< 0.0308	U
PCB-1262 (Aroclor 1262)		ND< 0.0318	U	ND< 0.0341	U	ND< 0.0311	U	ND< 0.0308	U
PCB-1268 (Aroclor 1268)		ND< 0.0318	U	ND< 0.0341	U	ND< 0.0311	U	ND< 0.0308	U

NOTES:

1. Soil sample analytical results are compared to the New York State Department of Environmental Conservation (NYSDEC) Title 6 of the official compilation of New York Codes, Rules, and Regulations (NYCRR) Part 375 Restricted Residential Soil Cleanup Objectives (RRSCOs).
2. RRSCO exceedances are in bold and highlighted yellow.
3. ND = Not Detected
4. Results shown as "ND" with Reporting Limits exceeding RRSCOs are in bold.
5. PCBs = Polychlorinated Biphenyls
6. µg/kg = micrograms per kilogram.
7. mg/kg = milligrams per kilogram.
8. Qualifier (Q) definitions are provided in the official lab reports.

Table 6A – VOCs in Soil – AOC-6

TABLE 6A: Volatile Organic Compounds (VOCs) in Soil
AOC-6 - Mortuary Building Area
Soil Sample Results (non-QA/QC)
Hudson River Psychiatric Center - North BCP Site, Poughkeepsie, NY
PVE Sheffler File #560909

	Date Sampled	11/24/2014		12/16/2014		12/17/2014		12/17/2014	
	Location	MRT-1		MRT-1		MRT-1		MRT-2	
	Sample ID	MRT-1 (0-2")		MRT-1 2-24"		MRT-1 5.5-7		MRT-2 18-20'	
Analyte	RRSCOs	Result	Q	Result	Q	Result	Q	Result	Q
VOCs (µg/kg)									
1,1,1-Trichloroethane	100000	ND< 2.91	U	ND< 2.19	U	ND< 1.58	U	ND< 2.01	U
1,1,2,2-Tetrachloroethane		ND< 2.91	U	ND< 2.19	U	ND< 1.58	U	ND< 2.01	U
1,1,2-Trichloro-1,2,2-Trifluoroethane		ND< 2.91	U	ND< 2.19	U	ND< 1.58	U	ND< 2.01	U
1,1,2-Trichloroethane		ND< 2.91	U	ND< 2.19	U	ND< 1.58	U	ND< 2.01	U
1,1-Dichloroethane	26000	ND< 2.91	U	ND< 2.19	U	ND< 1.58	U	ND< 2.01	U
1,1-Dichloroethene	100000	ND< 2.91	U	ND< 2.19	U	ND< 1.58	U	ND< 2.01	U
1,2,3-Trichlorobenzene		ND< 7.29	U	ND< 5.47	U	ND< 3.95	U	ND< 5.03	U
1,2,4-Trichlorobenzene		ND< 7.29	U	ND< 5.47	U	ND< 3.95	U	ND< 5.03	U
1,2,4-Trimethylbenzene	52000	ND< 2.91	U	ND< 2.19	U	ND< 1.58	U	ND< 2.01	U
1,2-Dibromo-3-Chloropropane		ND< 14.6	U	ND< 10.9	U	ND< 7.90	U	ND< 10.1	U
1,2-Dibromoethane (Ethylene Dibromide)		ND< 2.91	U	ND< 2.19	U	ND< 1.58	U	ND< 2.01	U
1,2-Dichlorobenzene	100000	ND< 2.91	U	ND< 2.19	U	ND< 1.58	U	ND< 2.01	U
1,2-Dichloroethane	3100	ND< 2.91	U	ND< 2.19	U	ND< 1.58	U	ND< 2.01	U
1,2-Dichloropropane		ND< 2.91	U	ND< 2.19	U	ND< 1.58	U	ND< 2.01	U
1,3,5-Trimethylbenzene (Mesitylene)	52000	ND< 2.91	U	ND< 2.19	U	ND< 1.58	U	ND< 2.01	U
1,3-Dichlorobenzene	49000	ND< 2.91	U	ND< 2.19	U	ND< 1.58	U	ND< 2.01	U
1,4-Dichlorobenzene	13000	ND< 2.91	U	ND< 2.19	U	ND< 1.58	U	ND< 2.01	U
1,4-Dioxane (P-Dioxane)	13000	ND< 29.1	U	ND< 21.9	U	ND< 15.8	U	ND< 20.1	U
2-Hexanone		ND< 7.29	U	ND< 5.47	U	ND< 3.95	U	ND< 5.03	U
Acetone	100000	ND< 14.6	U	ND< 10.9	U	ND< 7.90	U	ND< 10.1	U
Benzene	4800	ND< 2.91	U	ND< 2.19	U	ND< 1.58	U	ND< 2.01	U
Bromochloromethane		ND< 7.29	U	ND< 5.47	U	ND< 3.95	U	ND< 5.03	U
Bromodichloromethane		ND< 2.91	U	ND< 2.19	U	ND< 1.58	U	ND< 2.01	U
Bromoform		ND< 7.29	U	ND< 5.47	U	ND< 3.95	U	ND< 5.03	U
Bromomethane		ND< 2.91	U	ND< 2.19	U	ND< 1.58	U	ND< 2.01	U
Carbon Disulfide		ND< 2.91	U	ND< 2.19	U	ND< 1.58	U	ND< 2.01	U
Carbon Tetrachloride	2400	ND< 2.91	U	ND< 2.19	U	ND< 1.58	U	ND< 2.01	U
Chlorobenzene	100000	ND< 2.91	U	ND< 2.19	U	ND< 1.58	U	ND< 2.01	U
Chloroethane		ND< 2.91	U	ND< 2.19	U	ND< 1.58	U	ND< 2.01	U
Chloroform	49000	ND< 2.91	U	ND< 2.19	U	ND< 1.58	U	ND< 2.01	U
Chloromethane		ND< 2.91	U	ND< 2.19	U	ND< 1.58	U	ND< 2.01	U
Cis-1,2-Dichloroethylene	100000	ND< 2.91	U	ND< 2.19	U	ND< 1.58	U	ND< 2.01	U
Cis-1,3-Dichloropropene		ND< 2.91	U	ND< 2.19	U	ND< 1.58	U	ND< 2.01	U
Cyclohexane		ND< 14.6	U	ND< 10.9	U	ND< 7.90	U	ND< 10.1	U
Cymene		ND< 2.91	U	ND< 2.19	U	ND< 1.58	U	ND< 2.01	U
Dibromochloromethane		ND< 2.91	U	ND< 2.19	U	ND< 1.58	U	ND< 2.01	U
Dichlorodifluoromethane		ND< 2.91	U	ND< 2.19	U	ND< 1.58	U	ND< 2.01	U
Ethylbenzene	41000	ND< 2.91	U	ND< 2.19	U	ND< 1.58	U	ND< 2.01	U
Isopropylbenzene (Cumene)		ND< 2.91	U	ND< 2.19	U	ND< 1.58	U	ND< 2.01	U
Methyl Acetate		ND< 2.91	U	ND< 2.19	U	ND< 1.58	U	ND< 2.01	U
Methyl Ethyl Ketone (2-Butanone)	100000	ND< 14.6	U	ND< 10.9	U	ND< 7.90	U	ND< 10.1	U
Methyl Isobutyl Ketone (4-Methyl-2-Pentanone)		ND< 7.29	U	ND< 5.47	U	ND< 3.95	U	ND< 5.03	U
Methyl Tert-Butyl Ether (MTBE)	100000	ND< 2.91	U	ND< 2.19	U	ND< 1.58	U	ND< 2.01	U
Methylcyclohexane		ND< 2.91	U	ND< 2.19	U	ND< 1.58	U	ND< 2.01	U
Methylene Chloride	100000	ND< 7.29	U	ND< 5.47	U	ND< 3.95	U	ND< 5.03	U
M-P-Xylene		ND< 2.91	U	ND< 2.19	U	ND< 1.58	U	ND< 2.01	U
Naphthalene	100000	ND< 7.29	U	ND< 5.47	U	ND< 3.95	U	ND< 5.03	U
N-Butylbenzene	100000	ND< 2.91	U	ND< 2.19	U	ND< 1.58	U	ND< 2.01	U
N-Propylbenzene	100000	ND< 2.91	U	ND< 2.19	U	ND< 1.58	U	ND< 2.01	U
O-Xylene (1,2-Dimethylbenzene)		ND< 2.91	U	ND< 2.19	U	ND< 1.58	U	ND< 2.01	U
Sec-Butylbenzene	100000	ND< 2.91	U	ND< 2.19	U	ND< 1.58	U	ND< 2.01	U
Styrene		ND< 7.29	U	ND< 5.47	U	ND< 3.95	U	ND< 5.03	U
T-Butylbenzene	100000	ND< 2.91	U	ND< 2.19	U	ND< 1.58	U	ND< 2.01	U
Tetrachloroethylene (PCE)	19000	ND< 2.91	U	ND< 2.19	U	ND< 1.58	U	ND< 2.01	U
Toluene	100000	ND< 2.91	U	ND< 2.19	U	ND< 1.58	U	2.19	
Trans-1,2-Dichloroethene	100000	ND< 2.91	U	ND< 2.19	U	ND< 1.58	U	ND< 2.01	U
Trans-1,3-Dichloropropene		ND< 2.91	U	ND< 2.19	U	ND< 1.58	U	ND< 2.01	U
Trichloroethylene (TCE)	21000	ND< 2.91	U	ND< 2.19	U	ND< 1.58	U	ND< 2.01	U
Trichlorofluoromethane		ND< 2.91	U	ND< 2.19	U	ND< 1.58	U	ND< 2.01	U
Vinyl Chloride	900	ND< 2.91	U	ND< 2.19	U	ND< 1.58	U	ND< 2.01	U

NOTES:

1. Soil sample analytical results are compared to the New York State Department of Environmental Conservation (NYSDEC) Title 6 of the official compilation of New York Codes, Rules, and Regulations (NYCRR) Part 375 Restricted Residential Soil Cleanup Objectives (RRSCOs).
2. RRSCO exceedances are in bold and highlighted yellow.
3. ND = Not Detected
4. Results shown as "ND" with Reporting Limits exceeding RRSCOs are in bold.
5. VOCs = Volatile Organic Compounds
6. µg/kg = micrograms per kilogram.
7. Qualifier (Q) definitions are provided in the official lab reports.

TABLE 6B: Semi-Volatile Organic Compounds (SVOCs) in Soil
AOC-6 - Mortuary Building Area
Soil Sample Results (non-QA/QC)
Hudson River Psychiatric Center - North BCP Site, Poughkeepsie, NY
PVE Sheffler File #560909

	Date Sampled	11/24/2014		12/16/2014		12/17/2014		12/17/2014	
	Location	MRT-1		MRT-1		MRT-1		MRT-2	
	Sample ID	MRT-1 (0-2")		MRT-1 2-24"		MRT-1 5.5-7		MRT-2 18-20'	
Analyte	RRSCOs	Result	Q	Result	Q	Result	Q	Result	Q
SVOCs (µg/kg)									
1,2,4,5-Tetrachlorobenzene		ND< 339	U	ND< 337	U	ND< 335	U	ND< 297	U
1,2,4-Trichlorobenzene		ND< 339	U	ND< 337	U	ND< 335	U	ND< 297	U
1,2-Dichlorobenzene	100000	ND< 339	U	ND< 337	U	ND< 335	U	ND< 297	U
1,3-Dichlorobenzene	49000	ND< 339	U	ND< 337	U	ND< 335	U	ND< 297	U
1,4-Dichlorobenzene	13000	ND< 339	U	ND< 337	U	ND< 335	U	ND< 297	U
2,2-Oxybis(2-Chloropropane)		ND< 339	U	ND< 337	U	ND< 335	U	ND< 297	U
2,3,4,6-Tetrachlorophenol		ND< 339	U	ND< 337	U	ND< 335	U	ND< 297	U
2,4,5-Trichlorophenol		ND< 677	U	ND< 674	U	ND< 670	U	ND< 593	U
2,4,6-Trichlorophenol		ND< 339	U	ND< 337	U	ND< 335	U	ND< 297	U
2,4-Dichlorophenol		ND< 339	U	ND< 337	U	ND< 335	U	ND< 297	U
2,4-Dimethylphenol		ND< 339	U	ND< 337	U	ND< 335	U	ND< 297	U
2,4-Dinitrophenol		ND< 677	U	ND< 674	U	ND< 670	U	ND< 593	U
2,4-Dinitrotoluene		ND< 339	U	ND< 337	U	ND< 335	U	ND< 297	U
2,6-Dinitrotoluene		ND< 339	U	ND< 337	U	ND< 335	U	ND< 297	U
2-Chloronaphthalene		ND< 339	U	ND< 337	U	ND< 335	U	ND< 297	U
2-Chlorophenol		ND< 339	U	ND< 337	U	ND< 335	U	ND< 297	U
2-Methylnaphthalene		ND< 339	U	ND< 337	U	ND< 335	U	ND< 297	U
2-Methylphenol (O-Cresol)	100000	ND< 339	U	ND< 337	U	ND< 335	U	ND< 297	U
2-Nitroaniline		ND< 677	U	ND< 674	U	ND< 670	U	ND< 593	U
2-Nitrophenol		ND< 339	U	ND< 337	U	ND< 335	U	ND< 297	U
3,3'-Dichlorobenzidine		ND< 339	U	ND< 337	U	ND< 335	U	ND< 297	U
3-Methylphenol	100000	ND< 339	U	ND< 337	U	ND< 335	U	ND< 297	U
3-Nitroaniline		ND< 677	U	ND< 674	U	ND< 670	U	ND< 593	U
4,6-Dinitro-2-Methylphenol		ND< 677	U	ND< 674	U	ND< 670	U	ND< 593	U
4-Bromophenyl Phenyl Ether		ND< 339	U	ND< 337	U	ND< 335	U	ND< 297	U
4-Chloro-3-Methylphenol		ND< 339	U	ND< 337	U	ND< 335	U	ND< 297	U
4-Chloroaniline		ND< 339	U	ND< 337	U	ND< 335	U	ND< 297	U
4-Chlorophenyl Phenyl Ether		ND< 339	U	ND< 337	U	ND< 335	U	ND< 297	U
4-Nitroaniline		ND< 677	U	ND< 674	U	ND< 670	U	ND< 593	U
4-Nitrophenol		ND< 677	U	ND< 674	U	ND< 670	U	ND< 593	U
Acenaphthene	100000	ND< 339	U	ND< 337	U	ND< 335	U	ND< 297	U
Acenaphthylene	100000	ND< 339	U	290	J	ND< 335	U	ND< 297	U
Acetophenone		ND< 339	U	ND< 337	U	ND< 335	U	ND< 297	U
Anthracene	100000	ND< 339	U	265	J	ND< 335	U	ND< 297	U
Atrazine		ND< 339	U	ND< 337	U	ND< 335	U	ND< 297	U
Benzaldehyde		ND< 339	U	ND< 337	U	ND< 335	U	ND< 297	U
Benzo(A)Anthracene	1000	ND< 339	U	393		ND< 335	U	ND< 297	U
Benzo(A)Pyrene	1000	ND< 339	U	388		ND< 335	U	ND< 297	U
Benzo(B)Fluoranthene	1000	ND< 339	U	448		ND< 335	U	ND< 297	U
Benzo(G,H,I)Perylene	100000	ND< 339	U	302	J	ND< 335	U	ND< 297	U
Benzo(K)Fluoranthene	3900	ND< 339	U	253	J	ND< 335	U	ND< 297	U
Benzyl Butyl Phthalate		172	J	ND< 337	U	ND< 335	U	ND< 297	U
Biphenyl (Diphenyl)		ND< 339	U	ND< 337	U	ND< 335	U	ND< 297	U
Bis(2-Chloroethoxy) Methane		ND< 339	U	ND< 337	U	ND< 335	U	ND< 297	U
Bis(2-Chloroethyl) Ether (2-Chloroethyl Ether)		ND< 339	U	ND< 337	U	ND< 335	U	ND< 297	U
Bis(2-Ethylhexyl) Phthalate		ND< 339	U	ND< 337	U	ND< 335	U	ND< 297	U
Caprolactam		ND< 339	U	ND< 337	U	ND< 335	U	ND< 297	U
Carbazole		ND< 339	U	ND< 337	U	ND< 335	U	ND< 297	U
Chrysene	3900	ND< 339	U	472		ND< 335	U	ND< 297	U
Dibenz(A,H)Anthracene	**330**	**ND< 339**	**U**	**ND< 337**	**U**	**ND< 335**	**U**	ND< 297	U
Dibenzofuran	59000	ND< 339	U	ND< 337	U	ND< 335	U	ND< 297	U
Diethyl Phthalate		ND< 339	U	ND< 337	U	ND< 335	U	ND< 297	U
Dimethyl Phthalate		ND< 677	U	ND< 674	U	ND< 670	U	ND< 593	U
Di-N-Butyl Phthalate		ND< 339	U	ND< 337	U	ND< 335	U	ND< 297	U
Di-N-Octylphthalate		ND< 339	U	ND< 337	U	ND< 335	U	ND< 297	U
Fluoranthene	100000	189	J	646		ND< 335	U	ND< 297	U
Fluorene	100000	ND< 339	U	ND< 337	U	ND< 335	U	ND< 297	U
Hexachlorobenzene	1200	ND< 339	U	ND< 337	U	ND< 335	U	ND< 297	U
Hexachlorobutadiene		ND< 339	U	ND< 337	U	ND< 335	U	ND< 297	U
Hexachlorocyclopentadiene		ND< 339	U	ND< 337	U	ND< 335	U	ND< 297	U
Hexachloroethane		ND< 339	U	ND< 337	U	ND< 335	U	ND< 297	U
Indeno(1,2,3-C,D)Pyrene	500	ND< 339	U	383		ND< 335	U	ND< 297	U
Isophorone		ND< 339	U	ND< 337	U	ND< 335	U	ND< 297	U
Naphthalene	100000	ND< 339	U	ND< 337	U	ND< 335	U	ND< 297	U
Nitrobenzene		ND< 339	U	ND< 337	U	ND< 335	U	ND< 297	U
N-Nitrosodi-N-Propylamine		ND< 339	U	ND< 337	U	ND< 335	U	ND< 297	U
N-Nitrosodiphenylamine		ND< 339	U	ND< 337	U	ND< 335	U	ND< 297	U
Pentachlorophenol	6700	ND< 677	U	ND< 674	U	ND< 670	U	ND< 593	U
Phenanthrene	100000	ND< 339	U	313	J	ND< 335	U	ND< 297	U
Phenol	100000	ND< 339	U	ND< 337	U	ND< 335	U	ND< 297	U
Pyrene	100000	192	J	668		ND< 335	U	ND< 297	U

NOTES:

1. Soil sample analytical results are compared to the New York State Department of Environmental Conservation (NYSDEC) Title 6 of the official compilation of New York Codes, Rules, and Regulations (NYCRR) Part 375 Restricted Residential Soil Cleanup Objectives (RRSCOs).
2. RRSCO exceedances are in bold and highlighted yellow.
3. ND = Not Detected
4. Results shown as "ND" with Reporting Limits exceeding RRSCOs are in bold.
5. SVOCs = Semi-Volatile Organic Compounds
6. µg/kg = micrograms per kilogram.
7. Qualifier (Q) definitions are provided in the official lab reports.

Table 6B – SVOCs in Soil – AOC-6

TABLE 6B: Semi-Volatile Organic Compounds (SVOCs) in Soil
AOC-6 - Mortuary Building Area
Soil Sample Results (non-QA/QC)
Hudson River Psychiatric Center - North BCP Site, Poughkeepsie, NY
PVE Sheffler File #560909

	Date Sampled	11/24/2014		12/16/2014		12/17/2014		12/17/2014	
	Location	MRT-1		MRT-1		MRT-1		MRT-2	
	Sample ID	MRT-1 (0-2")		MRT-1 2-24"		MRT-1 5.5-7		MRT-2 18-20'	
Analyte	RRSCOs	Result	Q	Result	Q	Result	Q	Result	Q
SVOCs (µg/kg)									
1,2,4,5-Tetrachlorobenzene		ND< 339	U	ND< 337	U	ND< 335	U	ND< 297	U
1,2,4-Trichlorobenzene		ND< 339	U	ND< 337	U	ND< 335	U	ND< 297	U
1,2-Dichlorobenzene	100000	ND< 339	U	ND< 337	U	ND< 335	U	ND< 297	U
1,3-Dichlorobenzene	49000	ND< 339	U	ND< 337	U	ND< 335	U	ND< 297	U
1,4-Dichlorobenzene	13000	ND< 339	U	ND< 337	U	ND< 335	U	ND< 297	U
2,2-Oxybis(2-Chloropropane)		ND< 339	U	ND< 337	U	ND< 335	U	ND< 297	U
2,3,4,6-Tetrachlorophenol		ND< 339	U	ND< 337	U	ND< 335	U	ND< 297	U
2,4,5-Trichlorophenol		ND< 677	U	ND< 674	U	ND< 670	U	ND< 593	U
2,4,6-Trichlorophenol		ND< 339	U	ND< 337	U	ND< 335	U	ND< 297	U
2,4-Dichlorophenol		ND< 339	U	ND< 337	U	ND< 335	U	ND< 297	U
2,4-Dimethylphenol		ND< 339	U	ND< 337	U	ND< 335	U	ND< 297	U
2,4-Dinitrophenol		ND< 677	U	ND< 674	U	ND< 670	U	ND< 593	U
2,4-Dinitrotoluene		ND< 339	U	ND< 337	U	ND< 335	U	ND< 297	U
2,6-Dinitrotoluene		ND< 339	U	ND< 337	U	ND< 335	U	ND< 297	U
2-Chloronaphthalene		ND< 339	U	ND< 337	U	ND< 335	U	ND< 297	U
2-Chlorophenol		ND< 339	U	ND< 337	U	ND< 335	U	ND< 297	U
2-Methylnaphthalene		ND< 339	U	ND< 337	U	ND< 335	U	ND< 297	U
2-Methylphenol (O-Cresol)	100000	ND< 339	U	ND< 337	U	ND< 335	U	ND< 297	U
2-Nitroaniline		ND< 677	U	ND< 674	U	ND< 670	U	ND< 593	U
2-Nitrophenol		ND< 339	U	ND< 337	U	ND< 335	U	ND< 297	U
3,3'-Dichlorobenzidine		ND< 339	U	ND< 337	U	ND< 335	U	ND< 297	U
3-Methylphenol	100000	ND< 339	U	ND< 337	U	ND< 335	U	ND< 297	U
3-Nitroaniline		ND< 677	U	ND< 674	U	ND< 670	U	ND< 593	U
4,6-Dinitro-2-Methylphenol		ND< 677	U	ND< 674	U	ND< 670	U	ND< 593	U
4-Bromophenyl Phenyl Ether		ND< 339	U	ND< 337	U	ND< 335	U	ND< 297	U
4-Chloro-3-Methylphenol		ND< 339	U	ND< 337	U	ND< 335	U	ND< 297	U
4-Chloroaniline		ND< 339	U	ND< 337	U	ND< 335	U	ND< 297	U
4-Chlorophenyl Phenyl Ether		ND< 339	U	ND< 337	U	ND< 335	U	ND< 297	U
4-Nitroaniline		ND< 677	U	ND< 674	U	ND< 670	U	ND< 593	U
4-Nitrophenol		ND< 677	U	ND< 674	U	ND< 670	U	ND< 593	U
Acenaphthene	100000	ND< 339	U	ND< 337	U	ND< 335	U	ND< 297	U
Acenaphthylene	100000	ND< 339	U	290	J	ND< 335	U	ND< 297	U
Acetophenone		ND< 339	U	ND< 337	U	ND< 335	U	ND< 297	U
Anthracene	100000	ND< 339	U	265	J	ND< 335	U	ND< 297	U
Atrazine		ND< 339	U	ND< 337	U	ND< 335	U	ND< 297	U
Benzaldehyde		ND< 339	U	ND< 337	U	ND< 335	U	ND< 297	U
Benzo(A)Anthracene	1000	ND< 339	U	393		ND< 335	U	ND< 297	U
Benzo(A)Pyrene	1000	ND< 339	U	388		ND< 335	U	ND< 297	U
Benzo(B)Fluoranthene	1000	ND< 339	U	448		ND< 335	U	ND< 297	U
Benzo(G,H,I)Perylene	100000	ND< 339	U	302	J	ND< 335	U	ND< 297	U
Benzo(K)Fluoranthene	3900	ND< 339	U	253	J	ND< 335	U	ND< 297	U
Benzyl Butyl Phthalate		172	J	ND< 337	U	ND< 335	U	ND< 297	U
Biphenyl (Diphenyl)		ND< 339	U	ND< 337	U	ND< 335	U	ND< 297	U
Bis(2-Chloroethoxy) Methane		ND< 339	U	ND< 337	U	ND< 335	U	ND< 297	U
Bis(2-Chloroethyl) Ether (2-Chloroethyl Ether)		ND< 339	U	ND< 337	U	ND< 335	U	ND< 297	U
Bis(2-Ethylhexyl) Phthalate		ND< 339	U	ND< 337	U	ND< 335	U	ND< 297	U
Caprolactam		ND< 339	U	ND< 337	U	ND< 335	U	ND< 297	U
Carbazole		ND< 339	U	ND< 337	U	ND< 335	U	ND< 297	U
Chrysene	3900	ND< 339	U	472		ND< 335	U	ND< 297	U
Dibenz(A,H)Anthracene	**330**	**ND< 339**	**U**	**ND< 337**	**U**	**ND< 335**	**U**	ND< 297	U
Dibenzofuran	59000	ND< 339	U	ND< 337	U	ND< 335	U	ND< 297	U
Diethyl Phthalate		ND< 339	U	ND< 337	U	ND< 335	U	ND< 297	U
Dimethyl Phthalate		ND< 677	U	ND< 674	U	ND< 670	U	ND< 593	U
Di-N-Butyl Phthalate		ND< 339	U	ND< 337	U	ND< 335	U	ND< 297	U
Di-N-Octylphthalate		ND< 339	U	ND< 337	U	ND< 335	U	ND< 297	U
Fluoranthene	100000	189	J	646		ND< 335	U	ND< 297	U
Fluorene	100000	ND< 339	U	ND< 337	U	ND< 335	U	ND< 297	U
Hexachlorobenzene	1200	ND< 339	U	ND< 337	U	ND< 335	U	ND< 297	U
Hexachlorobutadiene		ND< 339	U	ND< 337	U	ND< 335	U	ND< 297	U
Hexachlorocyclopentadiene		ND< 339	U	ND< 337	U	ND< 335	U	ND< 297	U
Hexachloroethane		ND< 339	U	ND< 337	U	ND< 335	U	ND< 297	U
Indeno(1,2,3-C,D)Pyrene	500	ND< 339	U	383		ND< 335	U	ND< 297	U
Isophorone		ND< 339	U	ND< 337	U	ND< 335	U	ND< 297	U
Naphthalene	100000	ND< 339	U	ND< 337	U	ND< 335	U	ND< 297	U
Nitrobenzene		ND< 339	U	ND< 337	U	ND< 335	U	ND< 297	U
N-Nitrosodi-N-Propylamine		ND< 339	U	ND< 337	U	ND< 335	U	ND< 297	U
N-Nitrosodiphenylamine		ND< 339	U	ND< 337	U	ND< 335	U	ND< 297	U
Pentachlorophenol	6700	ND< 677	U	ND< 674	U	ND< 670	U	ND< 593	U
Phenanthrene	100000	ND< 339	U	313	J	ND< 335	U	ND< 297	U
Phenol	100000	ND< 339	U	ND< 337	U	ND< 335	U	ND< 297	U
Pyrene	100000	192	J	668		ND< 335	U	ND< 297	U

NOTES:

1. Soil sample analytical results are compared to the New York State Department of Environmental Conservation (NYSDEC) Title 6 of the official compilation of New York Codes, Rules, and Regulations (NYCRR) Part 375 Restricted Residential Soil Cleanup Objectives (RRSCOs).
2. RRSCO exceedances are in bold and highlighted yellow.
3. ND = Not Detected
4. Results shown as "ND" with Reporting Limits exceeding RRSCOs are in bold.
5. SVOCs = Semi-Volatile Organic Compounds
6. µg/kg = micrograms per kilogram.
7. Qualifier (Q) definitions are provided in the official lab reports.

Table 6C – Total Metals in Soil – AOC-6

TABLE 6C: Total Metals in Soil
AOC-6 - Mortuary Building Area
Soil Sample Results (non-QA/QC)
Hudson River Psychiatric Center - North BCP Site, Poughkeepsie, NY
PVE Sheffler File #560909

	Date Sampled	11/24/2014		12/16/2014		12/17/2014		12/17/2014	
	Location	MRT-1		MRT-1		MRT-1		MRT-2	
	Sample ID	MRT-1 (0-2")		MRT-1 2-24"		MRT-1 5.5-7		MRT-2 18-20'	
Analyte	RRSCOs	Result	Q	Result	Q	Result	Q	Result	Q
Metals (mg/kg)									
Arsenic	16	7.39		8.28		6.26		4.89	
Barium	400	47.1		62.2		49.4		33.3	
Beryllium	72	0.510	J	0.598		0.560	J	0.477	J
Cadmium	4.3	ND< 0.648	U	0.559		0.336	J	0.347	J
Chromium, Hexavalent	110	ND< 1.2	U						
Chromium, Hexavalent	110					ND< 1.2	U	ND< 1.2	U
Chromium, Total		24.8		18.9		20.1		15.7	
Copper	270	38.7		34.2		24.5		25.2	
Cyanide	27	ND< 0.484	U			ND< 0.431	U	ND< 0.433	U
Lead	400	194		157		13.3		11.8	
Manganese	2000	579		759		383		751	
Mercury	0.81	0.210		0.203		0.0531		0.0191	
Nickel	310	28.5		24.6		25.2		24.1	
Selenium	180	ND< 1.30	U	ND< 1.07	U	ND< 1.15	U	ND< 1.01	U
Silver	180	ND< 1.30	U	ND< 1.07	U	ND< 1.15	U	ND< 1.01	U
Zinc	10000	136		107		69.3		67.2	

NOTES:

1. Soil sample analytical results are compared to the New York State Department of Environmental Conservation (NYSDEC) Title 6 of the official compilation of New York Codes, Rules, and Regulations (NYCRR) Part 375 Restricted Residential Soil Cleanup Objectives (RRSCOs).
2. RRSCO exceedances are in bold and highlighted yellow.
3. ND = Not Detected
4. Results shown as "ND" with Reporting Limits exceeding RRSCOs are in bold.
5. mg/kg = milligrams per kilogram.
6. Qualifier (Q) definitions are provided in the official lab reports.

Table 6D – Pesticides, Herbicides, and PCBs in Soil – AOC-6

TABLE 6D: Pesticides, Herbicides, and PCBs in Soil
AOC-6 - Mortuary Building Area
Soil Sample Results (non-QA/QC)
Hudson River Psychiatric Center - North BCP Site, Poughkeepsie, NY
PVE Sheffler File #560909

	Date Sampled	11/24/2014		12/17/2014	
	Location	MRT-1		MRT-2	
	Sample ID	MRT-1 (0-2")		MRT-2 18-20'	
Analyte	RRSCOs	Result	Q	Result	Q
Pesticides (µg/kg)					
Aldrin	97	ND< 3.39	U	ND< 3.08	U
Alpha Bhc (Alpha Hexachlorocyclohexane)	480	2.06	J	ND< 3.08	U
Alpha Chlordane	4200	10.8		ND< 3.08	U
Alpha Endosulfan	24000	ND< 3.39	U	ND< 3.08	U
Beta Bhc (Beta Hexachlorocyclohexane)	360	ND< 3.39	U	ND< 3.08	U
Beta Endosulfan	24000	ND< 3.39	U	ND< 3.08	U
Delta BHC (Delta Hexachlorocyclohexane)	100000	1.81	JP	ND< 3.08	U
Dieldrin	200	ND< 3.39	U	ND< 3.08	U
Endosulfan Sulfate	24000	3.64	P	ND< 3.08	U
Endrin	11000	ND< 3.39	U	ND< 3.08	U
Endrin Aldehyde		8.26	P	ND< 3.08	U
Endrin Ketone		2.61	JP	ND< 3.08	U
Gamma Bhc (Lindane)	1300	ND< 3.39	U	ND< 3.08	U
Gamma Chlordane		ND< 3.39	U	ND< 3.08	U
Heptachlor	2100	ND< 3.39	U	ND< 3.08	U
Heptachlor Epoxide		ND< 3.39	U	ND< 3.08	U
Methoxychlor		3.21	JP	ND< 3.08	U
P,P'-DDD	13000	ND< 3.39	U	ND< 3.08	U
P,P'-DDE	8900	22.3		ND< 3.08	U
P,P'-DDT	7900	33.7		ND< 3.08	U
Toxaphene		ND< 33.9	U	ND< 30.8	U
Herbicides (µg/kg)					
Silvex (2,4,5-TP)	100000	ND< 15	U	ND< 15	U
PCBs (mg/kg)					
PCB-1016 (Aroclor 1016)		ND< 0.0339	U	ND< 0.0308	U
PCB-1221 (Aroclor 1221)		ND< 0.0339	U	ND< 0.0308	U
PCB-1232 (Aroclor 1232)		ND< 0.0339	U	ND< 0.0308	U
PCB-1242 (Aroclor 1242)		ND< 0.0339	U	ND< 0.0308	U
PCB-1248 (Aroclor 1248)		ND< 0.0339	U	ND< 0.0308	U
PCB-1254 (Aroclor 1254)		ND< 0.0339	U	ND< 0.0308	U
PCB-1260 (Aroclor 1260)		0.0249	J	ND< 0.0308	U
PCB-1262 (Aroclor 1262)		ND< 0.0339	U	ND< 0.0308	U
PCB-1268 (Aroclor 1268)		ND< 0.0339	U	ND< 0.0308	U

NOTES:

1. Soil sample analytical results are compared to the New York State Department of Environmental Conservation (NYSDEC) Title 6 of the official compilation of New York Codes, Rules, and Regulations (NYCRR) Part 375 Restricted Residential Soil Cleanup Objectives (RRSCOs).
2. RRSCO exceedances are in bold and highlighted yellow.
3. ND = Not Detected
4. Results shown as "ND" with Reporting Limits exceeding RRSCOs are in bold.
5. PCBs = Polychlorinated Biphenyls
6. µg/kg = micrograms per kilogram.
7. mg/kg = milligrams per kilogram.
8. Qualifier (Q) definitions are provided in the official lab reports.

Table 7A – VOCs in Soil – AOC-7

TABLE 7A: Volatile Organic Compounds (VOCs) in Soil
AOC-7 - Maintenance Building Area
Soil Sample Results (non-QA/QC)
Hudson River Psychiatric Center - North BCP Site, Poughkeepsie, NY
PVE Sheffler File #560909

	Date Sampled	12/16/2014		12/18/2014		12/17/2014		12/16/2014		12/16/2014		12/16/2014	
	Location	MNTC-1		MNTC-2		MNTC-3		MNTC-4		MNTC-4		MNTC-4	
	Sample ID	MNTC-1 18-20.5'		MNTC-2 16-18'		MNTC-3 8-10'		MNTC-4 0-2"		MNTC-4 2-24"		MNTC-4 10-12'	
Analyte	RRSCOs	Result	Q	Result	Q	Result	Q	Result	Q	Result	Q	Result	Q
VOCs (µg/kg)													
1,1,1-Trichloroethane	100000	ND< 1.65	U	ND< 1.94	U	ND< 2.04	U	ND< 2.89	U	ND< 1.91	U	ND< 2.35	U
1,1,2,2-Tetrachloroethane		ND< 1.65	U	ND< 1.94	U	ND< 2.04	U	ND< 2.89	U	ND< 1.91	U	ND< 2.35	U
1,1,2-Trichloro-1,2,2-Trifluoroethane		ND< 1.65	U	ND< 1.94	U	ND< 2.04	U	ND< 2.89	U	ND< 1.91	U	ND< 2.35	U
1,1,2-Trichloroethane		ND< 1.65	U	ND< 1.94	U	ND< 2.04	U	ND< 2.89	U	ND< 1.91	U	ND< 2.35	U
1,1-Dichloroethane	26000	ND< 1.65	U	ND< 1.94	U	ND< 2.04	U	ND< 2.89	U	ND< 1.91	U	ND< 2.35	U
1,1-Dichloroethene	100000	ND< 1.65	U	ND< 1.94	U	ND< 2.04	U	ND< 2.89	U	ND< 1.91	U	ND< 2.35	U
1,2,3-Trichlorobenzene		ND< 4.12	U	ND< 4.86	U	ND< 5.11	U	ND< 7.23	U	ND< 4.77	U	ND< 5.88	U
1,2,4-Trichlorobenzene		ND< 4.12	U	ND< 4.86	U	ND< 5.11	U	ND< 7.23	U	ND< 4.77	U	ND< 5.88	U
1,2,4-Trimethylbenzene	52000	ND< 1.65	U	ND< 1.94	U	ND< 2.04	U	ND< 2.89	U	ND< 1.91	U	ND< 2.35	U
1,2-Dibromo-3-Chloropropane		ND< 8.23	U	ND< 9.72	U	ND< 10.2	U	ND< 14.5	U	ND< 9.54	U	ND< 11.8	U
1,2-Dibromoethane (Ethylene Dibromide)		ND< 1.65	U	ND< 1.94	U	ND< 2.04	U	ND< 2.89	U	ND< 1.91	U	ND< 2.35	U
1,2-Dichlorobenzene	100000	ND< 1.65	U	ND< 1.94	U	ND< 2.04	U	ND< 2.89	U	ND< 1.91	U	ND< 2.35	U
1,2-Dichloroethane	3100	ND< 1.65	U	ND< 1.94	U	ND< 2.04	U	ND< 2.89	U	ND< 1.91	U	ND< 2.35	U
1,2-Dichloropropane		ND< 1.65	U	ND< 1.94	U	ND< 2.04	U	ND< 2.89	U	ND< 1.91	U	ND< 2.35	U
1,3,5-Trimethylbenzene (Mesitylene)	52000	ND< 1.65	U	ND< 1.94	U	ND< 2.04	U	ND< 2.89	U	ND< 1.91	U	ND< 2.35	U
1,3-Dichlorobenzene	49000	ND< 1.65	U	ND< 1.94	U	ND< 2.04	U	ND< 2.89	U	ND< 1.91	U	ND< 2.35	U
1,4-Dichlorobenzene	13000	ND< 1.65	U	ND< 1.94	U	ND< 2.04	U	ND< 2.89	U	ND< 1.91	U	ND< 2.35	U
1,4-Dioxane (P-Dioxane)	13000	ND< 16.5	U	ND< 19.4	U	ND< 20.4	U	ND< 28.9	U	ND< 19.1	U	ND< 23.5	U
2-Hexanone		ND< 4.12	U	ND< 4.86	U	ND< 5.11	U	ND< 7.23	U	ND< 4.77	U	ND< 5.88	U
Acetone	100000	ND< 8.23	U	ND< 9.72	U	ND< 10.2	U	ND< 14.5	U	ND< 9.54	U	ND< 11.8	U
Benzene	4800	ND< 1.65	U	ND< 1.94	U	ND< 2.04	U	ND< 2.89	U	ND< 1.91	U	ND< 2.35	U
Bromochloromethane		ND< 4.12	U	ND< 4.86	U	ND< 5.11	U	ND< 7.23	U	ND< 4.77	U	ND< 5.88	U
Bromodichloromethane		ND< 1.65	U	ND< 1.94	U	ND< 2.04	U	ND< 2.89	U	ND< 1.91	U	ND< 2.35	U
Bromoform		ND< 4.12	U	ND< 4.86	U	ND< 5.11	U	ND< 7.23	U	ND< 4.77	U	ND< 5.88	U
Bromomethane		ND< 1.65	U	ND< 1.94	U	ND< 2.04	U	ND< 2.89	U	ND< 1.91	U	ND< 2.35	U
Carbon Disulfide		ND< 1.65	U	ND< 1.94	U	ND< 2.04	U	ND< 2.89	U	ND< 1.91	U	ND< 2.35	U
Carbon Tetrachloride	2400	ND< 1.65	U	ND< 1.94	U	ND< 2.04	U	ND< 2.89	U	ND< 1.91	U	ND< 2.35	U
Chlorobenzene	100000	ND< 1.65	U	ND< 1.94	U	ND< 2.04	U	ND< 2.89	U	ND< 1.91	U	ND< 2.35	U
Chloroethane		ND< 1.65	U	ND< 1.94	U	ND< 2.04	U	ND< 2.89	U	ND< 1.91	U	ND< 2.35	U
Chloroform	49000	ND< 1.65	U	ND< 1.94	U	ND< 2.04	U	ND< 2.89	U	ND< 1.91	U	ND< 2.35	U
Chloromethane		ND< 1.65	U	ND< 1.94	U	ND< 2.04	U	ND< 2.89	U	ND< 1.91	U	ND< 2.35	U
Cis-1,2-Dichloroethylene	100000	ND< 1.65	U	ND< 1.94	U	ND< 2.04	U	ND< 2.89	U	ND< 1.91	U	ND< 2.35	U
Cis-1,3-Dichloropropene		ND< 1.65	U	ND< 1.94	U	ND< 2.04	U	ND< 2.89	U	ND< 1.91	U	ND< 2.35	U
Cyclohexane		ND< 8.23	U	ND< 9.72	U	ND< 10.2	U	ND< 14.5	U	ND< 9.54	U	ND< 11.8	U
Cymene		ND< 1.65	U	ND< 1.94	U	ND< 2.04	U	ND< 2.89	U	ND< 1.91	U	ND< 2.35	U
Dibromochloromethane		ND< 1.65	U	ND< 1.94	U	ND< 2.04	U	ND< 2.89	U	ND< 1.91	U	ND< 2.35	U
Dichlorodifluoromethane		ND< 1.65	U	ND< 1.94	U	ND< 2.04	U	ND< 2.89	U	ND< 1.91	U	ND< 2.35	U
Ethylbenzene	41000	ND< 1.65	U	ND< 1.94	U	ND< 2.04	U	ND< 2.89	U	ND< 1.91	U	ND< 2.35	U
Isopropylbenzene (Cumene)		ND< 1.65	U	ND< 1.94	U	ND< 2.04	U	ND< 2.89	U	ND< 1.91	U	ND< 2.35	U
Methyl Acetate		ND< 1.65	U	ND< 1.94	U	ND< 2.04	U	ND< 2.89	U	ND< 1.91	U	ND< 2.35	U
Methyl Ethyl Ketone (2-Butanone)	100000	ND< 8.23	U	ND< 9.72	U	ND< 10.2	U	ND< 14.5	U	ND< 9.54	U	ND< 11.8	U
Methyl Isobutyl Ketone (4-Methyl-2-Pentanone)		ND< 4.12	U	ND< 4.86	U	ND< 5.11	U	ND< 7.23	U	ND< 4.77	U	ND< 5.88	U
Methyl Tert-Butyl Ether (MTBE)	100000	ND< 1.65	U	ND< 1.94	U	ND< 2.04	U	ND< 2.89	U	ND< 1.91	U	ND< 2.35	U
Methylcyclohexane		ND< 1.65	U	ND< 1.94	U	ND< 2.04	U	ND< 2.89	U	ND< 1.91	U	ND< 2.35	U
Methylene Chloride	100000	ND< 4.12	U	ND< 4.86	U	ND< 5.11	U	ND< 7.23	U	ND< 4.77	U	ND< 5.88	U
M-P-Xylene		ND< 1.65	U	ND< 1.94	U	ND< 2.04	U	ND< 2.89	U	ND< 1.91	U	ND< 2.35	U
Naphthalene	100000	ND< 4.12	U	ND< 4.86	U	ND< 5.11	U	ND< 7.23	U	ND< 4.77	U	ND< 5.88	U
N-Butylbenzene	100000	ND< 1.65	U	ND< 1.94	U	ND< 2.04	U	ND< 2.89	U	ND< 1.91	U	ND< 2.35	U
N-Propylbenzene	100000	ND< 1.65	U	ND< 1.94	U	ND< 2.04	U	ND< 2.89	U	ND< 1.91	U	ND< 2.35	U
O-Xylene (1,2-Dimethylbenzene)		ND< 1.65	U	ND< 1.94	U	ND< 2.04	U	ND< 2.89	U	ND< 1.91	U	ND< 2.35	U
Sec-Butylbenzene	100000	ND< 1.65	U	ND< 1.94	U	ND< 2.04	U	ND< 2.89	U	ND< 1.91	U	ND< 2.35	U
Styrene		ND< 4.12	U	ND< 4.86	U	ND< 5.11	U	ND< 7.23	U	ND< 4.77	U	ND< 5.88	U
T-Butylbenzene	100000	ND< 1.65	U	ND< 1.94	U	ND< 2.04	U	ND< 2.89	U	ND< 1.91	U	ND< 2.35	U
Tetrachloroethylene (PCE)	19000	ND< 1.65	U	ND< 1.94	U	ND< 2.04	U	ND< 2.89	U	ND< 1.91	U	ND< 2.35	U
Toluene	100000	ND< 1.65	U	ND< 1.94	U	1.61	J	ND< 2.89	U	ND< 1.91	U	ND< 2.35	U
Trans-1,2-Dichloroethene	100000	ND< 1.65	U	ND< 1.94	U	ND< 2.04	U	ND< 2.89	U	ND< 1.91	U	ND< 2.35	U
Trans-1,3-Dichloropropene		ND< 1.65	U	ND< 1.94	U	ND< 2.04	U	ND< 2.89	U	ND< 1.91	U	ND< 2.35	U
Trichloroethylene (TCE)	21000	ND< 1.65	U	ND< 1.94	U	ND< 2.04	U	ND< 2.89	U	ND< 1.91	U	ND< 2.35	U
Trichlorofluoromethane		ND< 1.65	U	ND< 1.94	U	ND< 2.04	U	ND< 2.89	U	ND< 1.91	U	ND< 2.35	U
Vinyl Chloride	900	ND< 1.65	U	ND< 1.94	U	ND< 2.04	U	ND< 2.89	U	ND< 1.91	U	ND< 2.35	U

NOTES:

1. Soil sample analytical results are compared to the New York State Department of Environmental Conservation (NYSDEC) Title 6 of the official compilation of New York Codes, Rules, and Regulations (NYCRR) Part 375 Restricted Residential Soil Cleanup Objectives (RRSCOs).
2. RRSCO exceedances are in bold and highlighted yellow.
3. ND = Not Detected
4. Results shown as "ND" with Reporting Limits exceeding RRSCOs are in bold.
5. VOCs = Volatile Organic Compounds
6. µg/kg = micrograms per kilogram.
7. Qualifier (Q) definitions are provided in the official lab reports.

Table 7B – SVOCs in Soil – AOC-7

TABLE 7B: Semi-Volatile Organic Compounds (SVOCs) in Soil
AOC-7 - Maintenance Building Area
Soil Sample Results (non-QA/QC)
Hudson River Psychiatric Center - North BCP Site, Poughkeepsie, NY
PVE Sheffler File #560909

	Date Sampled	12/16/2014		12/18/2014		12/17/2014		12/16/2014		12/16/2014		12/16/2014	
	Location	MNTC-1		MNTC-2		MNTC-3		MNTC-4		MNTC-4		MNTC-4	
	Sample ID	MNTC-1 18-20.5'		MNTC-2 16-18'		MNTC-3 8-10'		MNTC-4 0-2"		MNTC-4 2-24"		MNTC-4 10-12'	
Analyte	RRSCOs	Result	Q	Result	Q	Result	Q	Result	Q	Result	Q	Result	Q
SVOCs (µg/kg)													
1,2,4,5-Tetrachlorobenzene		ND< 324	U	ND< 315	U	ND< 324	U	ND< 325	U	ND< 355	U	ND< 302	U
1,2,4-Trichlorobenzene		ND< 324	U	ND< 315	U	ND< 324	U	ND< 325	U	ND< 355	U	ND< 302	U
1,2-Dichlorobenzene	100000	ND< 324	U	ND< 315	U	ND< 324	U	ND< 325	U	ND< 355	U	ND< 302	U
1,3-Dichlorobenzene	49000	ND< 324	U	ND< 315	U	ND< 324	U	ND< 325	U	ND< 355	U	ND< 302	U
1,4-Dichlorobenzene	13000	ND< 324	U	ND< 315	U	ND< 324	U	ND< 325	U	ND< 355	U	ND< 302	U
2,2-Oxybis(2-Chloropropane)		ND< 324	U	ND< 315	U	ND< 324	U	ND< 325	U	ND< 355	U	ND< 302	U
2,3,4,6-Tetrachlorophenol		ND< 324	U	ND< 315	U	ND< 324	U	ND< 325	U	ND< 355	U	ND< 302	U
2,4,5-Trichlorophenol		ND< 648	U	ND< 631	U	ND< 648	U	ND< 650	U	ND< 709	U	ND< 605	U
2,4,6-Trichlorophenol		ND< 324	U	ND< 315	U	ND< 324	U	ND< 325	U	ND< 355	U	ND< 302	U
2,4-Dichlorophenol		ND< 324	U	ND< 315	U	ND< 324	U	ND< 325	U	ND< 355	U	ND< 302	U
2,4-Dimethylphenol		ND< 324	U	ND< 315	U	ND< 324	U	ND< 325	U	ND< 355	U	ND< 302	U
2,4-Dinitrophenol		ND< 648	U	ND< 631	U	ND< 648	U	ND< 650	U	ND< 709	U	ND< 605	U
2,4-Dinitrotoluene		ND< 324	U	ND< 315	U	ND< 324	U	ND< 325	U	ND< 355	U	ND< 302	U
2,6-Dinitrotoluene		ND< 324	U	ND< 315	U	ND< 324	U	ND< 325	U	ND< 355	U	ND< 302	U
2-Chloronaphthalene		ND< 324	U	ND< 315	U	ND< 324	U	ND< 325	U	ND< 355	U	ND< 302	U
2-Chlorophenol		ND< 324	U	ND< 315	U	ND< 324	U	ND< 325	U	ND< 355	U	ND< 302	U
2-Methylnaphthalene		ND< 324	U	ND< 315	U	ND< 324	U	ND< 325	U	ND< 355	U	ND< 302	U
2-Methylphenol (O-Cresol)	100000	ND< 324	U	ND< 315	U	ND< 324	U	ND< 325	U	ND< 355	U	ND< 302	U
2-Nitroaniline		ND< 648	U	ND< 631	U	ND< 648	U	ND< 650	U	ND< 709	U	ND< 605	U
2-Nitrophenol		ND< 324	U	ND< 315	U	ND< 324	U	ND< 325	U	ND< 355	U	ND< 302	U
3,3'-Dichlorobenzidine		ND< 324	U	ND< 315	U	ND< 324	U	ND< 325	U	ND< 355	U	ND< 302	U
3-Methylphenol	100000	ND< 324	U	ND< 315	U	ND< 324	U	ND< 325	U	ND< 355	U	ND< 302	U
3-Nitroaniline		ND< 648	U	ND< 631	U	ND< 648	U	ND< 650	U	ND< 709	U	ND< 605	U
4,6-Dinitro-2-Methylphenol		ND< 648	U	ND< 631	U	ND< 648	U	ND< 650	U	ND< 709	U	ND< 605	U
4-Bromophenyl Phenyl Ether		ND< 324	U	ND< 315	U	ND< 324	U	ND< 325	U	ND< 355	U	ND< 302	U
4-Chloro-3-Methylphenol		ND< 324	U	ND< 315	U	ND< 324	U	ND< 325	U	ND< 355	U	ND< 302	U
4-Chloroaniline		ND< 324	U	ND< 315	U	ND< 324	U	ND< 325	U	ND< 355	U	ND< 302	U
4-Chlorophenyl Phenyl Ether		ND< 324	U	ND< 315	U	ND< 324	U	ND< 325	U	ND< 355	U	ND< 302	U
4-Nitroaniline		ND< 648	U	ND< 631	U	ND< 648	U	ND< 650	U	ND< 709	U	ND< 605	U
4-Nitrophenol		ND< 648	U	ND< 631	U	ND< 648	U	ND< 650	U	ND< 709	U	ND< 605	U
Acenaphthene	100000	ND< 324	U	ND< 315	U	ND< 324	U	ND< 325	U	ND< 355	U	ND< 302	U
Acenaphthylene	100000	ND< 324	U	ND< 315	U	ND< 324	U	ND< 325	U	ND< 355	U	ND< 302	U
Acetophenone		ND< 324	U	ND< 315	U	ND< 324	U	ND< 325	U	ND< 355	U	ND< 302	U
Anthracene	100000	ND< 324	U	ND< 315	U	ND< 324	U	ND< 325	U	ND< 355	U	ND< 302	U
Atrazine		ND< 324	U	ND< 315	U	ND< 324	U	ND< 325	U	ND< 355	U	ND< 302	U
Benzaldehyde		ND< 324	U	ND< 315	U	ND< 324	U	ND< 325	U	ND< 355	U	ND< 302	U
Benzo(A)Anthracene	1000	ND< 324	U	ND< 315	U	ND< 324	U	ND< 325	U	ND< 355	U	ND< 302	U
Benzo(A)Pyrene	1000	ND< 324	U	ND< 315	U	ND< 324	U	ND< 325	U	ND< 355	U	ND< 302	U
Benzo(B)Fluoranthene	1000	ND< 324	U	ND< 315	U	ND< 324	U	ND< 325	U	ND< 355	U	ND< 302	U
Benzo(G,H,I)Perylene	100000	ND< 324	U	ND< 315	U	ND< 324	U	ND< 325	U	ND< 355	U	ND< 302	U
Benzo(K)Fluoranthene	3900	ND< 324	U	ND< 315	U	ND< 324	U	ND< 325	U	ND< 355	U	ND< 302	U
Benzyl Butyl Phthalate		ND< 324	U	ND< 315	U	ND< 324	U	ND< 325	U	ND< 355	U	ND< 302	U
Biphenyl (Diphenyl)		ND< 324	U	ND< 315	U	ND< 324	U	ND< 325	U	ND< 355	U	ND< 302	U
Bis(2-Chloroethoxy) Methane		ND< 324	U	ND< 315	U	ND< 324	U	ND< 325	U	ND< 355	U	ND< 302	U
Bis(2-Chloroethyl) Ether (2-Chloroethyl Ether)		ND< 324	U	ND< 315	U	ND< 324	U	ND< 325	U	ND< 355	U	ND< 302	U
Bis(2-Ethylhexyl) Phthalate		ND< 324	U	ND< 315	U	ND< 324	U	ND< 325	U	ND< 355	U	ND< 302	U
Caprolactam		ND< 324	U	ND< 315	U	ND< 324	U	ND< 325	U	ND< 355	U	ND< 302	U
Carbazole		ND< 324	U	ND< 315	U	ND< 324	U	ND< 325	U	ND< 355	U	ND< 302	U
Chrysene	3900	ND< 324	U	ND< 315	U	ND< 324	U	ND< 325	U	ND< 355	U	ND< 302	U
Dibenz(A,H)Anthracene	**330**	ND< 324	U	ND< 315	U	ND< 324	U	ND< 325	U	**ND< 355**	**U**	ND< 302	U
Dibenzofuran	59000	ND< 324	U	ND< 315	U	ND< 324	U	ND< 325	U	ND< 355	U	ND< 302	U
Diethyl Phthalate		ND< 324	U	ND< 315	U	ND< 324	U	ND< 325	U	ND< 355	U	ND< 302	U
Dimethyl Phthalate		ND< 648	U	ND< 631	U	ND< 648	U	ND< 650	U	ND< 709	U	ND< 605	U
Di-N-Butyl Phthalate		ND< 324	U	ND< 315	U	ND< 324	U	ND< 325	U	ND< 355	U	ND< 302	U
Di-N-Octylphthalate		ND< 324	U	ND< 315	U	ND< 324	U	ND< 325	U	ND< 355	U	ND< 302	U
Fluoranthene	100000	ND< 324	U	ND< 315	U	ND< 324	U	171	J	ND< 355	U	ND< 302	U
Fluorene	100000	ND< 324	U	ND< 315	U	ND< 324	U	ND< 325	U	ND< 355	U	ND< 302	U
Hexachlorobenzene	1200	ND< 324	U	ND< 315	U	ND< 324	U	ND< 325	U	ND< 355	U	ND< 302	U
Hexachlorobutadiene		ND< 324	U	ND< 315	U	ND< 324	U	ND< 325	U	ND< 355	U	ND< 302	U
Hexachlorocyclopentadiene		ND< 324	U	ND< 315	U	ND< 324	U	ND< 325	U	ND< 355	U	ND< 302	U
Hexachloroethane		ND< 324	U	ND< 315	U	ND< 324	U	ND< 325	U	ND< 355	U	ND< 302	U
Indeno(1,2,3-C,D)Pyrene	500	ND< 324	U	ND< 315	U	ND< 324	U	ND< 325	U	ND< 355	U	ND< 302	U
Isophorone		ND< 324	U	ND< 315	U	ND< 324	U	ND< 325	U	ND< 355	U	ND< 302	U
Naphthalene	100000	ND< 324	U	ND< 315	U	ND< 324	U	ND< 325	U	ND< 355	U	ND< 302	U
Nitrobenzene		ND< 324	U	ND< 315	U	ND< 324	U	ND< 325	U	ND< 355	U	ND< 302	U
N-Nitrosodi-N-Propylamine		ND< 324	U	ND< 315	U	ND< 324	U	ND< 325	U	ND< 355	U	ND< 302	U
N-Nitrosodiphenylamine		ND< 324	U	ND< 315	U	ND< 324	U	ND< 325	U	ND< 355	U	ND< 302	U
Pentachlorophenol	6700	ND< 648	U	ND< 631	U	ND< 648	U	ND< 650	U	ND< 709	U	ND< 605	U
Phenanthrene	100000	ND< 324	U	ND< 315	U	ND< 324	U	ND< 325	U	ND< 355	U	ND< 302	U
Phenol	100000	ND< 324	U	ND< 315	U	ND< 324	U	ND< 325	U	ND< 355	U	ND< 302	U
Pyrene	100000	ND< 324	U	ND< 315	U	ND< 324	U	194	J	202	J	ND< 302	U

NOTES:

1. Soil sample analytical results are compared to the New York State Department of Environmental Conservation (NYSDEC) Title 6 of the official compilation of New York Codes, Rules, and Regulations (NYCRR) Part 375 Restricted Residential Soil Cleanup Objectives (RRSCOs).
2. RRSCO exceedances are in bold and highlighted yellow.
3. ND = Not Detected
4. Results shown as "ND" with Reporting Limits exceeding RRSCOs are in bold.
5. SVOCs = Semi-Volatile Organic Compounds
6. µg/kg = micrograms per kilogram.
7. Qualifier (Q) definitions are provided in the official lab reports.

Table 7C – Total Metals in Soil – AOC-7

TABLE 7C: Total Metals in Soil
AOC-7 - Maintenance Building Area
Soil Sample Results (non-QA/QC)
Hudson River Psychiatric Center - North BCP Site, Poughkeepsie, NY
PVE Sheffler File #560909

	Date Sampled	12/16/2014		12/18/2014		12/17/2014		12/16/2014		12/16/2014		12/16/2014	
	Location	MNTC-1		MNTC-2		MNTC-3		MNTC-4		MNTC-4		MNTC-4	
	Sample ID	MNTC-1 18-20.5'		MNTC-2 16-18'		MNTC-3 8-10'		MNTC-4 0-2''		MNTC-4 2-24''		MNTC-4 10-12'	
Analyte	RRSCOs	Result	Q	Result	Q	Result	Q	Result	Q	Result	Q	Result	Q
Metals (mg/kg)													
Arsenic	**16**	12.3		4.59		7.53		**33.5**		6.95		6.54	
Barium	400	26.8		37.3		51.5		42.7	D	55.3		33.5	
Beryllium	72	0.520	J	0.422	J	0.610		0.720		0.639		0.517	J
Cadmium	4.3	1.32		ND< 0.565	U	0.557		ND< 0.610	U	0.381	J	0.436	J
Chromium, Hexavalent	110	ND< 1.2	U	ND< 1.1	U	ND< 1.2	U	ND< 1.3	U	ND< 1.2	U	ND< 1.1	U
Chromium, Total		19.5		13.4		18.2		14.7		17.2		18.8	
Copper	270	55.4		25.2		36.8		24.8		35.0		34.8	
Cyanide	27	ND< 0.336	U	ND< 0.473	U	ND< 0.554	U	ND< 0.451	U	ND< 0.630	U	ND< 0.529	U
Lead	400	17.0		10.3		14.5		50.5		54.0		13.2	
Manganese	2000	1500		661		826		210	D	720		747	
Mercury	0.81	0.0595		0.0217		0.0475		0.454	M	0.101		0.0318	
Nickel	310	51.0		20.3		28.9		23.8		23.3		29.8	
Selenium	180	ND< 1.15	U	ND< 2.26	U	ND< 1.11	U	ND< 1.22	U	ND< 1.23	U	ND< 1.06	U
Silver	180	ND< 1.15	U	ND< 1.13	U	ND< 1.11	U	ND< 1.22	U	ND< 1.23	U	ND< 1.06	U
Zinc	10000	178		65.3		125		43.7	D	78.2		87.4	

NOTES:

1. Soil sample analytical results are compared to the New York State Department of Environmental Conservation (NYSDEC) Title 6 of the official compilation of New York Codes, Rules, and Regulations (NYCRR) Part 375 Restricted Residential Soil Cleanup Objectives (RRSCOs).
2. RRSCO exceedances are in bold and highlighted yellow.
3. ND = Not Detected
4. Results shown as "ND" with Reporting Limits exceeding RRSCOs are in bold.
5. mg/kg = milligrams per kilogram.
6. Qualifier (Q) definitions are provided in the official lab reports.

Table 7D – Pesticides, Herbicides, and PCBs in Soil – AOC-7

TABLE 7D: Pesticides, Herbicides, and PCBs in Soil

AOC-7 - Maintenance Building Area

Soil Sample Results (non-QA/QC)

Hudson River Psychiatric Center - North BCP Site, Poughkeepsie, NY

PVE Sheffler File #560909

	Date Sampled	12/16/2014		12/18/2014		12/17/2014		12/16/2014		12/16/2014		12/16/2014	
	Location	MNTC-1		MNTC-2		MNTC-3		MNTC-4		MNTC-4		MNTC-4	
	Sample ID	MNTC-1 18-20.5'		MNTC-2 16-18'		MNTC-3 8-10'		MNTC-4 0-2"		MNTC-4 2-24"		MNTC-4 10-12'	
Analyte	RRSCOs	Result	Q	Result	Q	Result	Q	Result	Q	Result	Q	Result	Q
Pesticides (µg/kg)													
Aldrin	97	ND< 3.35	U	ND< 3.17	U	ND< 3.24	U	ND< 3.37	U	ND< 3.51	U	ND< 3.07	U
Alpha Bhc (Alpha Hexachlorocyclohexane)	480	ND< 3.35	U	ND< 3.17	U	ND< 3.24	U	ND< 3.37	U	ND< 3.51	U	ND< 3.07	U
Alpha Chlordane	4200	3.37	P	ND< 3.17	U	ND< 3.24	U	2.67	JP	ND< 3.51	U	ND< 3.07	U
Alpha Endosulfan	24000	ND< 3.35	U	ND< 3.17	U	ND< 3.24	U	ND< 3.37	U	ND< 3.51	U	ND< 3.07	U
Beta Bhc (Beta Hexachlorocyclohexane)	360	ND< 3.35	U	ND< 3.17	U	ND< 3.24	U	ND< 3.37	U	ND< 3.51	U	ND< 3.07	U
Beta Endosulfan	24000	ND< 3.35	U	ND< 3.17	U	ND< 3.24	U	ND< 3.37	U	ND< 3.51	U	ND< 3.07	U
Delta BHC (Delta Hexachlorocyclohexane)	100000	ND< 3.35	U	ND< 3.17	U	ND< 3.24	U	3.08	J	ND< 3.51	U	ND< 3.07	U
Dieldrin	200	ND< 3.35	U	ND< 3.17	U	ND< 3.24	U	ND< 3.37	U	ND< 3.51	U	ND< 3.07	U
Endosulfan Sulfate	24000	ND< 3.35	U	ND< 3.17	U	ND< 3.24	U	8.36	PM	ND< 3.51	U	ND< 3.07	U
Endrin	11000	ND< 3.35	U	ND< 3.17	U	ND< 3.24	U	2.59	J	ND< 3.51	U	ND< 3.07	U
Endrin Aldehyde		1.72	J	ND< 3.17	U	ND< 3.24	U	ND< 3.37	U	ND< 3.51	U	ND< 3.07	U
Endrin Ketone		3.09	J	ND< 3.17	U	ND< 3.24	U	1.71	JP	ND< 3.51	U	ND< 3.07	U
Gamma Bhc (Lindane)	1300	ND< 3.35	U	ND< 3.17	U	ND< 3.24	U	ND< 3.37	U	ND< 3.51	U	ND< 3.07	U
Gamma Chlordane		ND< 3.35	U	ND< 3.17	U	ND< 3.24	U	ND< 3.37	U	ND< 3.51	U	ND< 3.07	U
Heptachlor	2100	ND< 3.35	U	ND< 3.17	U	ND< 3.24	U	ND< 3.37	U	ND< 3.51	U	ND< 3.07	U
Heptachlor Epoxide		ND< 3.35	U	ND< 3.17	U	ND< 3.24	U	1.95	JP	ND< 3.51	U	ND< 3.07	U
Methoxychlor		ND< 3.35	U	ND< 3.17	U	ND< 3.24	U	2.56	JP	ND< 3.51	U	ND< 3.07	U
P,P'-DDD	13000	ND< 3.35	U	ND< 3.17	U	ND< 3.24	U	2.19	JP	ND< 3.51	U	ND< 3.07	U
P,P'-DDE	8900	ND< 3.35	U	ND< 3.17	U	ND< 3.24	U	1.89	JP	ND< 3.51	U	ND< 3.07	U
P,P'-DDT	7900	2.23	J	ND< 3.17	U	ND< 3.24	U	4.75		ND< 3.51	U	ND< 3.07	U
Toxaphene		ND< 33.5	U	ND< 31.7	U	ND< 32.4	U	ND< 33.7	U	ND< 35.1	U	ND< 30.7	U
Herbicides (µg/kg)													
Silvex (2,4,5-TP)	100000	ND< 14	U	ND< 14	U	ND< 14	U	ND< 15	U	ND< 15	U		
PCBs (mg/kg)													
PCB-1016 (Aroclor 1016)		ND< 0.0335	U	ND< 0.0317	U	ND< 0.0324	U	ND< 0.0337	U	ND< 0.0351	U	ND< 0.0307	U
PCB-1221 (Aroclor 1221)		ND< 0.0335	U	ND< 0.0317	U	ND< 0.0324	U	ND< 0.0337	U	ND< 0.0351	U	ND< 0.0307	U
PCB-1232 (Aroclor 1232)		ND< 0.0335	U	ND< 0.0317	U	ND< 0.0324	U	ND< 0.0337	U	ND< 0.0351	U	ND< 0.0307	U
PCB-1242 (Aroclor 1242)		ND< 0.0335	U	ND< 0.0317	U	ND< 0.0324	U	ND< 0.0337	U	ND< 0.0351	U	ND< 0.0307	U
PCB-1248 (Aroclor 1248)		ND< 0.0335	U	ND< 0.0317	U	ND< 0.0324	U	ND< 0.0337	U	ND< 0.0351	U	ND< 0.0307	U
PCB-1254 (Aroclor 1254)		ND< 0.0335	U	ND< 0.0317	U	ND< 0.0324	U	ND< 0.0337	U	ND< 0.0351	U	ND< 0.0307	U
PCB-1260 (Aroclor 1260)		ND< 0.0335	U	ND< 0.0317	U	ND< 0.0324	U	ND< 0.0337	U	ND< 0.0351	U	ND< 0.0307	U
PCB-1262 (Aroclor 1262)		ND< 0.0335	U	ND< 0.0317	U	ND< 0.0324	U	ND< 0.0337	U	ND< 0.0351	U	ND< 0.0307	U
PCB-1268 (Aroclor 1268)		ND< 0.0335	U	ND< 0.0317	U	ND< 0.0324	U	ND< 0.0337	U	ND< 0.0351	U	ND< 0.0307	U

NOTES:

1. Soil sample analytical results are compared to the New York State Department of Environmental Conservation (NYSDEC) Title 6 of the official compilation of New York Codes, Rules, and Regulations (NYCRR) Part 375 Restricted Residential Soil Cleanup Objectives (RRSCOs).
2. RRSCO exceedances are in bold and highlighted yellow.
3. ND = Not Detected
4. Results shown as "ND" with Reporting Limits exceeding RRSCOs are in bold.
5. PCBs = Polychlorinated Biphenyls
6. µg/kg = micrograms per kilogram.
7. mg/kg = milligrams per kilogram.
8. Qualifier (Q) definitions are provided in the official lab reports.

Table 8A – VOCs in Soil – Temporary Well Installation

TABLE 8A: Volatile Organic Compounds (VOCs) in Soil
Soil Samples collected during temporary well installation
Soil Sample Results (non-QA/QC)
Hudson River Psychiatric Center - North BCP Site, Poughkeepsie, NY
PVE Sheffler File #560909

	Date Sampled	5/15/2014		5/15/2014		5/13/2014		5/12/2014		7/14/2014	
	Location	GB-TMW-1		GB-TMW-2		GB-TMW-3		GB-TMW-4		GB-TMW-5	
	Sample ID	GB-TMW-1 15-16		GB-TMW-2 15-16		GB-TMW-3 6-8		GB-TMW-4 19-20'		GB-TMW-5 12-17'	
Analyte	RRSCOs	Result	Q	Result	Q	Result	Q	Result	Q	Result	Q
VOCs (µg/kg)											
1,1,1-Trichloroethane	100000	ND< 1.66	U	ND< 2.15	U	ND< 1.92	U	ND< 1.64	U	ND< 1.83	UJL
1,1,2,2-Tetrachloroethane		ND< 1.66	U	ND< 2.15	U	ND< 1.92	U	ND< 1.64	U	ND< 1.83	UJL
1,1,2-Trichloro-1,2,2-Trifluoroethane		ND< 1.66	U	ND< 2.15	U	ND< 1.92	U	ND< 1.64	U	ND< 1.83	UJL
1,1,2-Trichloroethane		ND< 1.66	U	ND< 2.15	U	ND< 1.92	U	ND< 1.64	U	ND< 1.83	UJL
1,1-Dichloroethane	26000	ND< 1.66	U	ND< 2.15	U	ND< 1.92	U	ND< 1.64	U	ND< 1.83	UJL
1,1-Dichloroethene	100000	ND< 1.66	U	ND< 2.15	U	ND< 1.92	U	ND< 1.64	U	ND< 1.83	UJL
1,2,3-Trichlorobenzene		ND< 4.15	U	ND< 5.37	U	ND< 4.81	U	ND< 4.11	U	ND< 4.58	UJL
1,2,4-Trichlorobenzene		ND< 4.15	U	ND< 5.37	U	ND< 4.81	U	ND< 4.11	U	ND< 4.58	UJL
1,2,4-Trimethylbenzene	52000	ND< 1.66	U	ND< 2.15	U	ND< 1.92	U	ND< 1.64	U	1.40	JL
1,2-Dibromo-3-Chloropropane		ND< 8.30	U	ND< 10.7	U	ND< 9.61	U	ND< 8.22	U	ND< 9.16	UJL
1,2-Dibromoethane (Ethylene Dibromide)		ND< 1.66	U	ND< 2.15	U	ND< 1.92	U	ND< 1.64	U	ND< 1.83	UJL
1,2-Dichlorobenzene	100000	ND< 1.66	U	ND< 2.15	U	ND< 1.92	U	ND< 1.64	U	ND< 1.83	UJL
1,2-Dichloroethane	3100	ND< 1.66	U	ND< 2.15	U	ND< 1.92	U	ND< 1.64	U	ND< 1.83	UJL
1,2-Dichloropropane		ND< 1.66	U	ND< 2.15	U	ND< 1.92	U	ND< 1.64	U	ND< 1.83	UJL
1,3,5-Trimethylbenzene (Mesitylene)	52000	ND< 1.66	U	ND< 2.15	U	ND< 1.92	U	ND< 1.64	U	1.40	JL
1,3-Dichlorobenzene	49000	ND< 1.66	U	ND< 2.15	U	ND< 1.92	U	ND< 1.64	U	ND< 1.83	UJL
1,4-Dichlorobenzene	13000	ND< 1.66	U	ND< 2.15	U	ND< 1.92	U	ND< 1.64	U	ND< 1.83	UJL
1,4-Dioxane (P-Dioxane)	13000	ND< 16.6	U	ND< 21.5	U	ND< 19.2	U	ND< 16.4	U	ND< 18.3	UJL
2-Hexanone		ND< 4.15	U	ND< 5.37	U	ND< 4.81	U	ND< 4.11	U	ND< 4.58	UJL
Acetone	100000	ND< 8.30	U	ND< 10.7	U	6.50	J	ND< 8.22	U	11.7	JL
Benzene	4800	ND< 1.66	U	ND< 2.15	U	ND< 1.92	U	ND< 1.64	U	ND< 1.83	UJL
Bromochloromethane		ND< 4.15	U	ND< 5.37	U	ND< 4.81	U	ND< 4.11	U	ND< 4.58	UJL
Bromodichloromethane		ND< 1.66	U	ND< 2.15	U	ND< 1.92	U	ND< 1.64	U	ND< 1.83	UJL
Bromoform		ND< 4.15	U	ND< 5.37	U	ND< 4.81	U	ND< 4.11	U	ND< 4.58	UJL
Bromomethane		ND< 1.66	U	ND< 2.15	U	ND< 1.92	U	ND< 1.64	U	ND< 1.83	UJL
Carbon Disulfide		ND< 1.66	U	ND< 2.15	U	ND< 1.92	U	ND< 1.64	U	ND< 1.83	UJL
Carbon Tetrachloride	2400	ND< 1.66	U	ND< 2.15	U	ND< 1.92	U	ND< 1.64	U	ND< 1.83	UJL
Chlorobenzene	100000	ND< 1.66	U	ND< 2.15	U	ND< 1.92	U	ND< 1.64	U	ND< 1.83	UJL
Chloroethane		ND< 1.66	U	ND< 2.15	U	ND< 1.92	U	ND< 1.64	U	ND< 1.83	UJL
Chloroform	49000	ND< 1.66	U	ND< 2.15	U	ND< 1.92	U	ND< 1.64	U	ND< 1.83	UJL
Chloromethane		ND< 1.66	U	ND< 2.15	U	ND< 1.92	U	ND< 1.64	U	ND< 1.83	UJL
Cis-1,2-Dichloroethylene	100000	ND< 1.66	U	ND< 2.15	U	ND< 1.92	U	ND< 1.64	U	ND< 1.83	UJL
Cis-1,3-Dichloropropene		ND< 1.66	U	ND< 2.15	U	ND< 1.92	U	ND< 1.64	U	ND< 1.83	UJL
Cyclohexane		ND< 8.30	U	ND< 10.7	U	ND< 9.61	U	ND< 8.22	U	ND< 9.16	UJL
Cymene		ND< 1.66	U	ND< 2.15	U	ND< 1.92	U	ND< 1.64	U	ND< 1.83	UJL
Dibromochloromethane		ND< 1.66	U	ND< 2.15	U	ND< 1.92	U	ND< 1.64	U	ND< 1.83	UJL
Dichlorodifluoromethane		ND< 1.66	U	ND< 2.15	U	ND< 1.92	U	ND< 1.64	U	ND< 1.83	UJL
Ethylbenzene	41000	ND< 1.66	U	ND< 2.15	U	ND< 1.92	U	ND< 1.64	U	ND< 1.83	UJL
Isopropylbenzene (Cumene)		ND< 1.66	U	ND< 2.15	U	ND< 1.92	U	ND< 1.64	U	ND< 1.83	UJL
Methyl Acetate		ND< 1.66	U	ND< 2.15	U	ND< 1.92	U	ND< 1.64	U	ND< 1.83	UJL
Methyl Ethyl Ketone (2-Butanone)	100000	ND< 8.30	U	ND< 10.7	U	ND< 9.61	U	ND< 8.22	U	ND< 9.16	UJL
Methyl Isobutyl Ketone (4-Methyl-2-Pentanone)		ND< 4.15	U	ND< 5.37	U	ND< 4.81	U	ND< 4.11	U	ND< 4.58	UJL
Methyl Tert-Butyl Ether (MTBE)	100000	ND< 1.66	U	ND< 2.15	U	ND< 1.92	U	ND< 1.64	U	ND< 1.83	UJL
Methylcyclohexane		ND< 1.66	U	ND< 2.15	U	ND< 1.92	U	ND< 1.64	U	1.26	JL
Methylene Chloride	100000	ND< 4.15	U	ND< 5.37	U	ND< 4.81	U	ND< 4.11	U	ND< 4.58	UJL
M-P-Xylene		ND< 1.66	U	ND< 2.15	U	ND< 1.92	U	ND< 1.64	U	1.78	JL
Naphthalene	100000	ND< 4.15	U	ND< 5.37	U	ND< 4.81	U	ND< 4.11	U	ND< 4.58	UJL
N-Butylbenzene	100000	ND< 1.66	U	ND< 2.15	U	ND< 1.92	U	ND< 1.64	U	ND< 1.83	UJL
N-Propylbenzene	100000	ND< 1.66	U	ND< 2.15	U	ND< 1.92	U	ND< 1.64	U	ND< 1.83	UJL
O-Xylene (1,2-Dimethylbenzene)		ND< 1.66	U	ND< 2.15	U	ND< 1.92	U	ND< 1.64	U	1.28	JL
Sec-Butylbenzene	100000	ND< 1.66	U	ND< 2.15	U	ND< 1.92	U	ND< 1.64	U	1.29	JL
Styrene		ND< 4.15	U	ND< 5.37	U	ND< 4.81	U	ND< 4.11	U	ND< 4.58	UJL
T-Butylbenzene	100000	ND< 1.66	U	ND< 2.15	U	ND< 1.92	U	ND< 1.64	U	ND< 1.83	UJL
Tetrachloroethylene (PCE)	19000	ND< 1.66	U	ND< 2.15	U	ND< 1.92	U	ND< 1.64	U	ND< 1.83	UJL
Toluene	100000	ND< 1.66	U	ND< 2.15	U	ND< 1.92	U	ND< 1.64	U	1.21	JL
Trans-1,2-Dichloroethene	100000	ND< 1.66	U	ND< 2.15	U	ND< 1.92	U	ND< 1.64	U	ND< 1.83	UJL
Trans-1,3-Dichloropropene		ND< 1.66	U	ND< 2.15	U	ND< 1.92	U	ND< 1.64	U	ND< 1.83	UJL
Trichloroethylene (TCE)	21000	ND< 1.66	U	ND< 2.15	U	ND< 1.92	U	ND< 1.64	U	ND< 1.83	UJL
Trichlorofluoromethane		ND< 1.66	U	ND< 2.15	U	ND< 1.92	U	ND< 1.64	U	ND< 1.83	UJL
Vinyl Chloride	900	ND< 1.66	U	ND< 2.15	U	ND< 1.92	U	ND< 1.64	U	ND< 1.83	UJL

NOTES:

1. Soil sample analytical results are compared to the New York State Department of Environmental Conservation (NYSDEC) Title 6 of the official compilation of New York Codes, Rules, and Regulations (NYCRR) Part 375 Restricted Residential Soil Cleanup Objectives (RRSCOs).
2. RRSCO exceedances are in bold and highlighted yellow.
3. ND = Not Detected
4. Results shown as "ND" with Reporting Limits exceeding RRSCOs are in bold.
5. VOCs = Volatile Organic Compounds
6. µg/kg = micrograms per kilogram.
7. Qualifier (Q) definitions are provided in the official lab reports.

Table 8B – SVOCs in Soil – Temporary Well Installation

TABLE 8B: Semi-Volatile Organic Compounds (SVOCs) in Soil
Soil Samples collected during temporary well installation
Soil Sample Results (non-QA/QC)
Hudson River Psychiatric Center - North BCP Site, Poughkeepsie, NY
PVE Sheffler File #560909

	Date Sampled	5/15/2014		5/15/2014		5/13/2014		5/12/2014		5/27/2014	
	Location	GB-TMW-1		GB-TMW-2		GB-TMW-3		GB-TMW-4		GB-TMW-5	
	Sample ID	GB-TMW-1 15-16		GB-TMW-2 15-16		GB-TMW-3 6-8		GB-TMW-4 19-20'		GB-TMW-5 12-17'	
Analyte	RRSCOs	Result	Q	Result	Q	Result	Q	Result	Q	Result	Q
SVOCs (µg/kg)											
1,2,4,5-Tetrachlorobenzene		ND< 289	U	ND< 310	U	ND< 316	U	ND< 324	U	ND< 360	U
1,2,4-Trichlorobenzene		ND< 289	U	ND< 310	U	ND< 316	U	ND< 324	U	ND< 360	U
1,2-Dichlorobenzene	100000	ND< 289	U	ND< 310	U	ND< 316	U	ND< 324	U	ND< 360	U
1,3-Dichlorobenzene	49000	ND< 289	U	ND< 310	U	ND< 316	U	ND< 324	U	ND< 360	U
1,4-Dichlorobenzene	13000	ND< 289	U	ND< 310	U	ND< 316	U	ND< 324	U	ND< 360	U
2,2-Oxybis(2-Chloropropane)		ND< 289	U	ND< 310	U	ND< 316	U	ND< 324	U	ND< 360	U
2,3,4,6-Tetrachlorophenol		ND< 289	U	ND< 310	U	ND< 316	U	ND< 324	U	ND< 360	U
2,4,5-Trichlorophenol		ND< 578	U	ND< 620	U	ND< 632	U	ND< 647	U	ND< 721	U
2,4,6-Trichlorophenol		ND< 289	U	ND< 310	U	ND< 316	U	ND< 324	U	ND< 360	U
2,4-Dichlorophenol		ND< 289	U	ND< 310	U	ND< 316	U	ND< 324	U	ND< 360	U
2,4-Dimethylphenol		ND< 289	U	ND< 310	U	ND< 316	U	ND< 324	U	ND< 360	U
2,4-Dinitrophenol		ND< 578	U	ND< 620	U	ND< 632	U	ND< 647	U	ND< 721	U
2,4-Dinitrotoluene		ND< 289	U	ND< 310	U	ND< 316	U	ND< 324	U	ND< 360	U
2,6-Dinitrotoluene		ND< 289	U	ND< 310	U	ND< 316	U	ND< 324	U	ND< 360	U
2-Chloronaphthalene		ND< 289	U	ND< 310	U	ND< 316	U	ND< 324	U	ND< 360	U
2-Chlorophenol		ND< 289	U	ND< 310	U	ND< 316	U	ND< 324	U	ND< 360	U
2-Methylnaphthalene		ND< 289	U	ND< 310	U	ND< 316	U	ND< 324	U	ND< 360	U
2-Methylphenol (O-Cresol)	100000	ND< 289	U	ND< 310	U	ND< 316	U	ND< 324	U	ND< 360	U
2-Nitroaniline		ND< 578	U	ND< 620	U	ND< 632	U	ND< 647	U	ND< 721	U
2-Nitrophenol		ND< 289	U	ND< 310	U	ND< 316	U	ND< 324	U	ND< 360	U
3,3'-Dichlorobenzidine		ND< 289	U	ND< 310	U	ND< 316	U	ND< 324	U	ND< 360	U
3-Methylphenol	100000	ND< 289	U	ND< 310	U	ND< 316	U	ND< 324	U	ND< 360	U
3-Nitroaniline		ND< 578	U	ND< 620	U	ND< 632	U	ND< 647	U	ND< 721	U
4,6-Dinitro-2-Methylphenol		ND< 578	U	ND< 620	U	ND< 632	U	ND< 647	U	ND< 721	U
4-Bromophenyl Phenyl Ether		ND< 289	U	ND< 310	U	ND< 316	U	ND< 324	U	ND< 360	U
4-Chloro-3-Methylphenol		ND< 289	U	ND< 310	U	ND< 316	U	ND< 324	U	ND< 360	U
4-Chloroaniline		ND< 289	U	ND< 310	U	ND< 316	U	ND< 324	U	ND< 360	U
4-Chlorophenyl Phenyl Ether		ND< 289	U	ND< 310	U	ND< 316	U	ND< 324	U	ND< 360	U
4-Nitroaniline		ND< 578	U	ND< 620	U	ND< 632	U	ND< 647	U	ND< 721	U
4-Nitrophenol		ND< 578	U	ND< 620	U	ND< 632	U	ND< 647	U	ND< 721	U
Acenaphthene	100000	ND< 289	U	ND< 310	U	ND< 316	U	ND< 324	U	ND< 360	U
Acenaphthylene	100000	ND< 289	U	ND< 310	U	ND< 316	U	ND< 324	U	ND< 360	U
Acetophenone		ND< 289	U	ND< 310	U	ND< 316	U	ND< 324	U	ND< 360	U
Anthracene	100000	ND< 289	U	ND< 310	U	ND< 316	U	ND< 324	U	ND< 360	U
Atrazine		ND< 289	U	ND< 310	U	ND< 316	U	ND< 324	U	ND< 360	U
Benzaldehyde		ND< 289	U	ND< 310	U	ND< 316	U	ND< 324	U	ND< 360	U
Benzo(A)Anthracene	1000	ND< 289	U	ND< 310	U	ND< 316	U	ND< 324	U	ND< 360	U
Benzo(A)Pyrene	1000	ND< 289	U	ND< 310	U	ND< 316	U	ND< 324	U	ND< 360	U
Benzo(B)Fluoranthene	1000	ND< 289	U	ND< 310	U	ND< 316	U	ND< 324	U	ND< 360	U
Benzo(G,H,I)Perylene	100000	ND< 289	U	ND< 310	U	ND< 316	U	ND< 324	U	ND< 360	U
Benzo(K)Fluoranthene	3900	ND< 289	U	ND< 310	U	ND< 316	U	ND< 324	U	ND< 360	U
Benzyl Butyl Phthalate		ND< 289	U	ND< 310	U	ND< 316	U	ND< 324	U	ND< 360	U
Biphenyl (Diphenyl)		ND< 289	U	ND< 310	U	ND< 316	U	ND< 324	U	ND< 360	U
Bis(2-Chloroethoxy) Methane		ND< 289	U	ND< 310	U	ND< 316	U	ND< 324	U	ND< 360	U
Bis(2-Chloroethyl) Ether (2-Chloroethyl Ether)		ND< 289	U	ND< 310	U	ND< 316	U	ND< 324	U	ND< 360	U
Bis(2-Ethylhexyl) Phthalate		ND< 289	U	ND< 310	U	ND< 316	U	ND< 324	U	ND< 360	U
Caprolactam		ND< 289	U	ND< 310	U	ND< 316	U	ND< 324	U	ND< 360	U
Carbazole		ND< 289	U	ND< 310	U	ND< 316	U	ND< 324	U	ND< 360	U
Chrysene	3900	ND< 289	U	ND< 310	U	ND< 316	U	ND< 324	U	ND< 360	U
Dibenz(A,H)Anthracene	**330**	ND< 289	U	ND< 310	U	ND< 316	U	ND< 324	U	**ND< 360**	**U**
Dibenzofuran	59000	ND< 289	U	ND< 310	U	ND< 316	U	ND< 324	U	ND< 360	U
Diethyl Phthalate		ND< 289	U	ND< 310	U	ND< 316	U	ND< 324	U	ND< 360	U
Dimethyl Phthalate		ND< 578	U	ND< 620	U	ND< 632	U	ND< 647	U	ND< 721	U
Di-N-Butyl Phthalate		ND< 289	U	ND< 310	U	ND< 316	U	ND< 324	U	ND< 360	U
Di-N-Octylphthalate		ND< 289	U	ND< 310	U	ND< 316	U	ND< 324	U	ND< 360	U
Fluoranthene	100000	ND< 289	U	ND< 310	U	ND< 316	U	ND< 324	U	ND< 360	U
Fluorene	100000	ND< 289	U	ND< 310	U	ND< 316	U	ND< 324	U	ND< 360	U
Hexachlorobenzene	1200	ND< 289	U	ND< 310	U	ND< 316	U	ND< 324	U	ND< 360	U
Hexachlorobutadiene		ND< 289	U	ND< 310	U	ND< 316	U	ND< 324	U	ND< 360	U
Hexachlorocyclopentadiene		ND< 289	U	ND< 310	U	ND< 316	U	ND< 324	U	ND< 360	U
Hexachloroethane		ND< 289	U	ND< 310	U	ND< 316	U	ND< 324	U	ND< 360	U
Indeno(1,2,3-C,D)Pyrene	500	ND< 289	U	ND< 310	U	ND< 316	U	ND< 324	U	ND< 360	U
Isophorone		ND< 289	U	ND< 310	U	ND< 316	U	ND< 324	U	ND< 360	U
Naphthalene	100000	ND< 289	U	ND< 310	U	ND< 316	U	ND< 324	U	ND< 360	U
Nitrobenzene		ND< 289	U	ND< 310	U	ND< 316	U	ND< 324	U	ND< 360	U
N-Nitrosodi-N-Propylamine		ND< 289	U	ND< 310	U	ND< 316	U	ND< 324	U	ND< 360	U
N-Nitrosodiphenylamine		ND< 289	U	ND< 310	U	ND< 316	U	ND< 324	U	ND< 360	U
Pentachlorophenol	6700	ND< 578	U	ND< 620	U	ND< 632	U	ND< 647	U	ND< 721	U
Phenanthrene	100000	ND< 289	U	ND< 310	U	ND< 316	U	ND< 324	U	ND< 360	U
Phenol	100000	ND< 289	U	ND< 310	U	ND< 316	U	ND< 324	U	ND< 360	U
Pyrene	100000	ND< 289	U	ND< 310	U	ND< 316	U	ND< 324	U	ND< 360	U

NOTES:

1. Soil sample analytical results are compared to the New York State Department of Environmental Conservation (NYSDEC) Title 6 of the official compilation of New York Codes, Rules, and Regulations (NYCRR) Part 375 Restricted Residential Soil Cleanup Objectives (RRSCOs).
2. RRSCO exceedances are in bold and highlighted yellow.
3. ND = Not Detected
4. Results shown as "ND" with Reporting Limits exceeding RRSCOs are in bold.
5. SVOCs = Semi-Volatile Organic Compounds
6. µg/kg = micrograms per kilogram.
7. Qualifier (Q) definitions are provided in the official lab reports.

Table 8C – Total Metals in Soil – Temporary Well Installation

TABLE 8C: Total Metals in Soil

Soil Samples collected during temporary well installation

Soil Sample Results (non-QA/QC)

Hudson River Psychiatric Center - North BCP Site, Poughkeepsie, NY

PVE Sheffler File #560909

	Date Sampled	5/15/2014		5/15/2014		5/13/2014		5/12/2014		5/27/2014	
	Location	GB-TMW-1		GB-TMW-2		GB-TMW-3		GB-TMW-4		GB-TMW-5	
	Sample ID	GB-TMW-1 15-16		GB-TMW-2 15-16		GB-TMW-3 6-8		GB-TMW-4 19-20'		GB-TMW-5 12-17'	
Analyte	RRSCOs	Result	Q	Result	Q	Result	Q	Result	Q	Result	Q
Metals (mg/kg)											
Aluminum		12600		12000		15700		13200		13300	
Antimony		ND< 6.11	U	ND< 7.60	U	ND< 6.46	U	ND< 6.75	U	3.88	J
Arsenic	**16**	6.02		6.26		7.53		6.00		**22.8**	
Barium	400	33.9		25.0		46.3		52.2		43.2	
Beryllium	72	0.424	J	0.392	J	0.742		0.494	J	0.528	J
Cadmium	4.3	ND< 0.509	U	ND< 0.634	U	ND< 0.539	U	ND< 0.562	U	0.701	
Calcium		44100		57300		608		47300		375	
Chromium, Hexavalent	110	ND< 1.1	U	ND< 1.1	U	ND< 1.1	U	ND< 1.1	U	ND< 1.3	U
Chromium, Total		13.6		16.9		18.4		16.1		31.4	D
Cyanide	27	ND< 0.54	U	ND< 0.57	U	ND< 0.56	U	ND< 0.55	U	ND< 0.63	U
Cobalt		10.8		10.8		14.6		11.9		10.3	
Copper	270	26.8		24.1		37.4		30.5		78.1	
Iron		27100		25900		34500		26800		34900	
Lead	400	9.14		10.5		20.6		12.0		18.2	
Magnesium		6650		6060		6060		6080		4630	
Manganese	2000	650		658		1480		834		697	DM
Mercury	0.81	0.0116	J	0.0120	J	0.0336		0.0227		0.0998	
Nickel	310	23.3		22.2		29.7		27.0		45.0	
Potassium		928		711		1050		1250		2290	
Selenium	180	1.02	J	ND< 1.27	U	ND< 1.08	U	ND< 1.12	U	4.55	D
Silver	180	ND< 1.02	U	ND< 1.27	U	ND< 1.08	U	ND< 1.12	U	ND< 1.18	U
Sodium		ND< 254	U	ND< 317	U	151		ND< 281	U	ND< 295	U
Thallium		ND< 2.54	U	ND< 3.17	U	1.88		ND< 2.81	U	ND< 2.95	U
Vanadium		13.2		11.9		17.8		15.6		42.6	
Zinc	10000	79.1		77.9		108		82.7		269	

NOTES:

1. Soil sample analytical results are compared to the New York State Department of Environmental Conservation (NYSDEC) Title 6 of the official compilation of New York Codes, Rules, and Regulations (NYCRR) Part 375 Restricted Residential Soil Cleanup Objectives (RRSCOs).
2. RRSCO exceedances are in bold and highlighted yellow.
3. ND = Not Detected
4. Results shown as "ND" with Reporting Limits exceeding RRSCOs are in bold.
5. mg/kg = milligrams per kilogram.
6. Qualifier (Q) definitions are provided in the official lab reports.

Table 8D – Pesticides, Herbicides, and PCBs in Soil – Temporary Well Installation

TABLE 8D: Pesticides, Herbicides, and PCBs in Soil
Soil Samples collected during temporary well installation
Soil Sample Results (non-QA/QC)
Hudson River Psychiatric Center - North BCP Site, Poughkeepsie, NY
PVE Sheffler File #560909

	Date Sampled	5/15/2014		5/15/2014		5/13/2014		5/12/2014		5/27/2014	
	Location	GB-TMW-1		GB-TMW-2		GB-TMW-3		GB-TMW-4		GB-TMW-5	
	Sample ID	GB-TMW-1 15-16		GB-TMW-2 15-16		GB-TMW-3 6-8		GB-TMW-4 19-20'		GB-TMW-5 12-17'	
Analyte	RRSCOs	Result	Q	Result	Q	Result	Q	Result	Q	Result	Q
Pesticides (µg/kg)											
Aldrin	97	ND< 2.94	U	ND< 3.28	U	ND< 3.18	U	ND< 3.30	U	ND< 3.59	U
Alpha Bhc (Alpha Hexachlorocyclohexane)	480	ND< 2.94	U	ND< 3.28	U	ND< 3.18	U	ND< 3.30	U	ND< 3.59	U
Alpha Chlordane	4200	ND< 2.94	U	ND< 3.28	U	ND< 3.18	U	ND< 3.30	U	ND< 3.59	U
Alpha Endosulfan	24000	ND< 2.94	U	ND< 3.28	U	ND< 3.18	U	ND< 3.30	U	ND< 3.59	U
Beta Bhc (Beta Hexachlorocyclohexane)	360	ND< 2.94	U	ND< 3.28	U	ND< 3.18	U	ND< 3.30	U	ND< 3.59	U
Beta Endosulfan	24000	ND< 2.94	U	ND< 3.28	U	ND< 3.18	U	ND< 3.30	U	ND< 3.59	U
Delta BHC (Delta Hexachlorocyclohexane)	100000	ND< 2.94	U	ND< 3.28	U	ND< 3.18	U	ND< 3.30	U	1.91	JP
Dieldrin	200	ND< 2.94	U	ND< 3.28	U	ND< 3.18	U	ND< 3.30	U	ND< 3.59	U
Endosulfan Sulfate	24000	ND< 2.94	U	ND< 3.28	U	ND< 3.18	U	ND< 3.30	U	ND< 3.59	U
Endrin	11000	ND< 2.94	U	ND< 3.28	U	ND< 3.18	U	ND< 3.30	U	ND< 3.59	U
Endrin Aldehyde		ND< 2.94	U	ND< 3.28	U	ND< 3.18	U	ND< 3.30	U	ND< 3.59	U
Endrin Ketone		ND< 2.94	U	ND< 3.28	U	ND< 3.18	U	ND< 3.30	U	ND< 3.59	U
Gamma Bhc (Lindane)	1300	ND< 2.94	U	ND< 3.28	U	ND< 3.18	U	ND< 3.30	U	ND< 3.59	U
Gamma Chlordane		ND< 2.94	U	ND< 3.28	U	ND< 3.18	U	ND< 3.30	U	ND< 3.59	U
Heptachlor	2100	ND< 2.94	U	ND< 3.28	U	ND< 3.18	U	ND< 3.30	U	ND< 3.59	U
Heptachlor Epoxide		ND< 2.94	U	ND< 3.28	U	ND< 3.18	U	ND< 3.30	U	ND< 3.59	U
Methoxychlor		ND< 2.94	U	ND< 3.28	U	ND< 3.18	U	ND< 3.30	U	ND< 3.59	U
P,P'-DDD	13000	ND< 2.94	U	ND< 3.28	U	ND< 3.18	U	ND< 3.30	U	ND< 3.59	U
P,P'-DDE	8900	ND< 2.94	U	ND< 3.28	U	ND< 3.18	U	ND< 3.30	U	ND< 3.59	U
P,P'-DDT	7900	ND< 2.94	U	ND< 3.28	U	ND< 3.18	U	ND< 3.30	U	ND< 3.59	U
Toxaphene		ND< 29.4	U	ND< 32.8	U	ND< 31.8	U	ND< 33.0	U	ND< 35.9	U
Herbicides (µg/kg)											
Silvex (2,4,5-TP)	100000	ND< 13	U	ND< 14	U	ND< 13	U	ND< 13	U	ND< 15	U
PCBs (mg/kg)											
PCB-1016 (Aroclor 1016)		ND< 0.0294	U	ND< 0.0328	U	ND< 0.0318	U	ND< 0.0330	U	ND< 0.0359	U
PCB-1221 (Aroclor 1221)		ND< 0.0294	U	ND< 0.0328	U	ND< 0.0318	U	ND< 0.0330	U	ND< 0.0359	U
PCB-1232 (Aroclor 1232)		ND< 0.0294	U	ND< 0.0328	U	ND< 0.0318	U	ND< 0.0330	U	ND< 0.0359	U
PCB-1242 (Aroclor 1242)		ND< 0.0294	U	ND< 0.0328	U	ND< 0.0318	U	ND< 0.0330	U	ND< 0.0359	U
PCB-1248 (Aroclor 1248)		ND< 0.0294	U	ND< 0.0328	U	ND< 0.0318	U	ND< 0.0330	U	ND< 0.0359	U
PCB-1254 (Aroclor 1254)		ND< 0.0294	U	ND< 0.0328	U	ND< 0.0318	U	ND< 0.0330	U	ND< 0.0359	U
PCB-1260 (Aroclor 1260)		ND< 0.0294	U	ND< 0.0328	U	ND< 0.0318	U	ND< 0.0330	U	ND< 0.0359	U
PCB-1262 (Aroclor 1262)		ND< 0.0294	U	ND< 0.0328	U	ND< 0.0318	U	ND< 0.0330	U	ND< 0.0359	U
PCB-1268 (Aroclor 1268)		ND< 0.0294	U	ND< 0.0328	U	ND< 0.0318	U	ND< 0.0330	U	ND< 0.0359	U

NOTES:

1. Soil sample analytical results are compared to the New York State Department of Environmental Conservation (NYSDEC) Title 6 of the official compilation of New York Codes, Rules, and Regulations (NYCRR) Part 375 Restricted Residential Soil Cleanup Objectives (RRSCOs).
2. RRSCO exceedances are in bold and highlighted yellow.
3. ND = Not Detected
4. Results shown as "ND" with Reporting Limits exceeding RRSCOs are in bold.
5. PCBs = Polychlorinated Biphenyls
6. µg/kg = micrograms per kilogram.
7. mg/kg = milligrams per kilogram.
8. Qualifier (Q) definitions are provided in the official lab reports.

Table 9A – VOCs in Soil – Surface Samples Outside AOCs

TABLE 9A: Volatile Organic Compounds (VOCs) in Soil
Surface soil samples collected outside of AOCs
Soil Sample Results (non-QA/QC)
Hudson River Psychiatric Center - North BCP Site, Poughkeepsie, NY
PVE Sheffler File #560909

	Date Sampled	5/5/2014		5/5/2014		5/5/2014		5/5/2014		5/5/2014		5/5/2014		5/5/2014		5/5/2014		5/5/2014		5/5/2014		5/5/2014		5/15/2014	
	Location	SS-1		SS-1		SS-2		SS-2		SS-3		SS-3		SS-4		SS-4		SS-5		SS-5		SS-6		SS-6B	
	Sample ID	SS-1 0-2"		SS-1 12-18"		SS-2 0-2"		SS-2 12-16"		SS-3 0-2"		SS-3 12-20"		SS-4 0-2"		SS-4 12-17"		SS-5 0-2"		SS-5 12-20"		SS-6 0-2"		SS-6B 0-2"	
Analyte	RRSCOs	Result	Q	Result	Q	Result	Q	Result	Q	Result	Q	Result	Q	Result	Q	Result	Q	Result	Q	Result	Q	Result	Q	Result	Q
VOCs (µg/kg)																									
1,1,1-Trichloroethane	100000	ND< 2.37	U	ND< 2.14	U	ND< 2.35	U	ND< 1.84	U	ND< 2.60	U	ND< 2.15	U	ND< 2.41	U	ND< 2.14	U	ND< 2.25	U	ND< 2.63	U	ND< 2.31	U	ND< 2.45	U
1,1,2,2-Tetrachloroethane		ND< 2.37	U	ND< 2.14	U	ND< 2.35	U	ND< 1.84	U	ND< 2.60	U	ND< 2.15	U	ND< 2.41	U	ND< 2.14	U	ND< 2.25	U	ND< 2.63	U	ND< 2.31	U	ND< 2.45	U
1,1,2-Trichloro-1,2,2-Trifluoroethane		ND< 2.37	U	ND< 2.14	U	ND< 2.35	U	ND< 1.84	U	ND< 2.60	U	ND< 2.15	U	ND< 2.41	U	ND< 2.14	U	ND< 2.25	U	ND< 2.63	U	ND< 2.31	U	ND< 2.45	U
1,1,2-Trichloroethane		ND< 2.37	U	ND< 2.14	U	ND< 2.35	U	ND< 1.84	U	ND< 2.60	U	ND< 2.15	U	ND< 2.41	U	ND< 2.14	U	ND< 2.25	U	ND< 2.63	U	ND< 2.31	U	ND< 2.45	U
1,1-Dichloroethane	26000	ND< 2.37	U	ND< 2.14	U	ND< 2.35	U	ND< 1.84	U	ND< 2.60	U	ND< 2.15	U	ND< 2.41	U	ND< 2.14	U	ND< 2.25	U	ND< 2.63	U	ND< 2.31	U	ND< 2.45	U
1,1-Dichloroethene	100000	ND< 2.37	U	ND< 2.14	U	ND< 2.35	U	ND< 1.84	U	ND< 2.60	U	ND< 2.15	U	ND< 2.41	U	ND< 2.14	U	ND< 2.25	U	ND< 2.63	U	ND< 2.31	U	ND< 2.45	U
1,2,3-Trichlorobenzene		ND< 5.92	U	ND< 5.35	U	ND< 5.88	U	ND< 4.60	U	ND< 6.49	U	ND< 5.38	U	ND< 6.02	U	ND< 5.34	U	ND< 5.63	U	ND< 6.56	U	ND< 5.77	U	ND< 6.12	U
1,2,4-Trichlorobenzene		ND< 5.92	U	ND< 5.35	U	ND< 5.88	U	ND< 4.60	U	ND< 6.49	U	ND< 5.38	U	ND< 6.02	U	ND< 5.34	U	ND< 5.63	U	ND< 6.56	U	ND< 5.77	U	ND< 6.12	U
1,2,4-Trimethylbenzene	52000	ND< 2.37	U	ND< 2.14	U	ND< 2.35	U	ND< 1.84	U	ND< 2.60	U	ND< 2.15	U	ND< 2.41	U	ND< 2.14	U	ND< 2.25	U	ND< 2.63	U	ND< 2.31	U	ND< 2.45	U
1,2-Dibromo-3-Chloropropane		ND< 11.8	U	ND< 10.7	U	ND< 11.8	U	ND< 9.21	U	ND< 13.0	U	ND< 10.8	U	ND< 12.0	U	ND< 10.7	U	ND< 11.3	U	ND< 13.1	U	ND< 11.5	U	ND< 12.2	U
1,2-Dibromoethane (Ethylene Dibromide)		ND< 2.37	U	ND< 2.14	U	ND< 2.35	U	ND< 1.84	U	ND< 2.60	U	ND< 2.15	U	ND< 2.41	U	ND< 2.14	U	ND< 2.25	U	ND< 2.63	U	ND< 2.31	U	ND< 2.45	U
1,2-Dichlorobenzene	100000	ND< 2.37	U	ND< 2.14	U	ND< 2.35	U	ND< 1.84	U	ND< 2.60	U	ND< 2.15	U	ND< 2.41	U	ND< 2.14	U	ND< 2.25	U	ND< 2.63	U	ND< 2.31	U	ND< 2.45	U
1,2-Dichloroethane	3100	ND< 2.37	U	ND< 2.14	U	ND< 2.35	U	ND< 1.84	U	ND< 2.60	U	ND< 2.15	U	ND< 2.41	U	ND< 2.14	U	ND< 2.25	U	ND< 2.63	U	ND< 2.31	U	ND< 2.45	U
1,2-Dichloropropane		ND< 2.37	U	ND< 2.14	U	ND< 2.35	U	ND< 1.84	U	ND< 2.60	U	ND< 2.15	U	ND< 2.41	U	ND< 2.14	U	ND< 2.25	U	ND< 2.63	U	ND< 2.31	U	ND< 2.45	U
1,3,5-Trimethylbenzene (Mesitylene)	52000	ND< 2.37	U	ND< 2.14	U	ND< 2.35	U	ND< 1.84	U	ND< 2.60	U	ND< 2.15	U	ND< 2.41	U	ND< 2.14	U	ND< 2.25	U	ND< 2.63	U	ND< 2.31	U	ND< 2.45	U
1,3-Dichlorobenzene	49000	ND< 2.37	U	ND< 2.14	U	ND< 2.35	U	ND< 1.84	U	ND< 2.60	U	ND< 2.15	U	ND< 2.41	U	ND< 2.14	U	ND< 2.25	U	ND< 2.63	U	ND< 2.31	U	ND< 2.45	U
1,4-Dichlorobenzene	13000	ND< 2.37	U	ND< 2.14	U	ND< 2.35	U	ND< 1.84	U	ND< 2.60	U	ND< 2.15	U	ND< 2.41	U	ND< 2.14	U	ND< 2.25	U	ND< 2.63	U	ND< 2.31	U	ND< 2.45	U
1,4-Dioxane (P-Dioxane)	13000	ND< 23.7	U	ND< 21.4	U	ND< 23.5	U	ND< 18.4	U	ND< 26.0	U	ND< 21.5	U	ND< 24.1	U	ND< 21.4	U	ND< 22.5	U	ND< 26.3	U	ND< 23.1	U	ND< 24.5	U
2-Hexanone		ND< 5.92	U	ND< 5.35	U	ND< 5.88	U	ND< 4.60	U	ND< 6.49	U	ND< 5.38	U	ND< 6.02	U	ND< 5.34	U	ND< 5.63	U	ND< 6.56	U	ND< 5.77	U	ND< 6.12	U
Acetone	100000	ND< 11.8	U	ND< 10.7	U	ND< 11.8	U	ND< 9.21	U	ND< 13.0	U	ND< 10.8	U	ND< 12.0	U	ND< 10.7	U	ND< 11.3	U	ND< 13.1	U	ND< 11.5	U	ND< 12.2	U
Benzene	4800	ND< 2.37	U	ND< 2.14	U	ND< 2.35	U	ND< 1.84	U	ND< 2.60	U	ND< 2.15	U	ND< 2.41	U	ND< 2.14	U	ND< 2.25	U	ND< 2.63	U	ND< 2.31	U	ND< 2.45	U
Bromochloromethane		ND< 5.92	U	ND< 5.35	U	ND< 5.88	U	ND< 4.60	U	ND< 6.49	U	ND< 5.38	U	ND< 6.02	U	ND< 5.34	U	ND< 5.63	U	ND< 6.56	U	ND< 5.77	U	ND< 6.12	U
Bromodichloromethane		ND< 2.37	U	ND< 2.14	U	ND< 2.35	U	ND< 1.84	U	ND< 2.60	U	ND< 2.15	U	ND< 2.41	U	ND< 2.14	U	ND< 2.25	U	ND< 2.63	U	ND< 2.31	U	ND< 2.45	U
Bromoform		ND< 5.92	U	ND< 5.35	U	ND< 5.88	U	ND< 4.60	U	ND< 6.49	U	ND< 5.38	U	ND< 6.02	U	ND< 5.34	U	ND< 5.63	U	ND< 6.56	U	ND< 5.77	U	ND< 6.12	U
Bromomethane		ND< 2.37	U	ND< 2.14	U	ND< 2.35	U	ND< 1.84	U	ND< 2.60	U	ND< 2.15	U	ND< 2.41	U	ND< 2.14	U	ND< 2.25	U	ND< 2.63	U	ND< 2.31	U	ND< 2.45	U
Carbon Disulfide		ND< 2.37	U	ND< 2.14	U	ND< 2.35	U	ND< 1.84	U	ND< 2.60	U	ND< 2.15	U	ND< 2.41	U	ND< 2.14	U	ND< 2.25	U	ND< 2.63	U	ND< 2.31	U	ND< 2.45	U
Carbon Tetrachloride	2400	ND< 2.37	U	ND< 2.14	U	ND< 2.35	U	ND< 1.84	U	ND< 2.60	U	ND< 2.15	U	ND< 2.41	U	ND< 2.14	U	ND< 2.25	U	ND< 2.63	U	ND< 2.31	U	ND< 2.45	U
Chlorobenzene	100000	ND< 2.37	U	ND< 2.14	U	ND< 2.35	U	ND< 1.84	U	ND< 2.60	U	ND< 2.15	U	ND< 2.41	U	ND< 2.14	U	ND< 2.25	U	ND< 2.63	U	ND< 2.31	U	ND< 2.45	U
Chloroethane		ND< 2.37	U	ND< 2.14	U	ND< 2.35	U	ND< 1.84	U	ND< 2.60	U	ND< 2.15	U	ND< 2.41	U	ND< 2.14	U	ND< 2.25	U	ND< 2.63	U	ND< 2.31	U	ND< 2.45	U
Chloroform	49000	ND< 2.37	U	ND< 2.14	U	ND< 2.35	U	ND< 1.84	U	ND< 2.60	U	ND< 2.15	U	ND< 2.41	U	ND< 2.14	U	ND< 2.25	U	ND< 2.63	U	ND< 2.31	U	ND< 2.45	U
Chloromethane		ND< 2.37	U	ND< 2.14	U	ND< 2.35	U	ND< 1.84	U	ND< 2.60	U	ND< 2.15	U	ND< 2.41	U	ND< 2.14	U	ND< 2.25	U	ND< 2.63	U	ND< 2.31	U	ND< 2.45	U
Cis-1,2-Dichloroethylene	100000	ND< 2.37	U	ND< 2.14	U	ND< 2.35	U	ND< 1.84	U	ND< 2.60	U	ND< 2.15	U	ND< 2.41	U	ND< 2.14	U	ND< 2.25	U	ND< 2.63	U	ND< 2.31	U	ND< 2.45	U
Cis-1,3-Dichloropropene		ND< 2.37	U	ND< 2.14	U	ND< 2.35	U	ND< 1.84	U	ND< 2.60	U	ND< 2.15	U	ND< 2.41	U	ND< 2.14	U	ND< 2.25	U	ND< 2.63	U	ND< 2.31	U	ND< 2.45	U
Cyclohexane		ND< 11.8	U	ND< 10.7	U	ND< 11.8	U	ND< 9.21	U	ND< 13.0	U	ND< 10.8	U	ND< 12.0	U	ND< 10.7	U	ND< 11.3	U	ND< 13.1	U	ND< 11.5	U	ND< 12.2	U
Cymene		ND< 2.37	U	ND< 2.14	U	ND< 2.35	U	ND< 1.84	U	ND< 2.60	U	ND< 2.15	U	ND< 2.41	U	ND< 2.14	U	ND< 2.25	U	ND< 2.63	U	ND< 2.31	U	ND< 2.45	U
Dibromochloromethane		ND< 2.37	U	ND< 2.14	U	ND< 2.35	U	ND< 1.84	U	ND< 2.60	U	ND< 2.15	U	ND< 2.41	U	ND< 2.14	U	ND< 2.25	U	ND< 2.63	U	ND< 2.31	U	ND< 2.45	U
Dichlorodifluoromethane		ND< 2.37	U	ND< 2.14	U	ND< 2.35	U	ND< 1.84	U	ND< 2.60	U	ND< 2.15	U	ND< 2.41	U	ND< 2.14	U	ND< 2.25	U	ND< 2.63	U	ND< 2.31	U	ND< 2.45	U
Ethylbenzene	41000	ND< 2.37	U	ND< 2.14	U	ND< 2.35	U	ND< 1.84	U	ND< 2.60	U	ND< 2.15	U	ND< 2.41	U	ND< 2.14	U	ND< 2.25	U	ND< 2.63	U	ND< 2.31	U	ND< 2.45	U
Isopropylbenzene (Cumene)		ND< 2.37	U	ND< 2.14	U	ND< 2.35	U	ND< 1.84	U	ND< 2.60	U	ND< 2.15	U	ND< 2.41	U	ND< 2.14	U	ND< 2.25	U	ND< 2.63	U	ND< 2.31	U	ND< 2.45	U
Methyl Acetate		ND< 2.37	U	2.00	J	ND< 2.35	U	ND< 1.84	U	ND< 2.60	U	12.7		ND< 2.41	U	5.64		ND< 2.25	U	4.54		ND< 2.31	U	ND< 2.45	U
Methyl Ethyl Ketone (2-Butanone)	100000	ND< 11.8	U	ND< 10.7	U	ND< 11.8	U	ND< 9.21	U	ND< 13.0	U	ND< 10.8	U	ND< 12.0	U	ND< 10.7	U	ND< 11.3	U	ND< 13.1	U	ND< 11.5	U	ND< 12.2	U
Methyl Isobutyl Ketone (4-Methyl-2-Pentanone)		ND< 5.92	U	ND< 5.35	U	ND< 5.88	U	ND< 4.60	U	ND< 6.49	U	ND< 5.38	U	ND< 6.02	U	ND< 5.34	U	ND< 5.63	U	ND< 6.56	U	ND< 5.77	U	ND< 6.12	U
Methyl Tert-Butyl Ether (MTBE)	100000	ND< 2.37	U	ND< 2.14	U	ND< 2.35	U	ND< 1.84	U	ND< 2.60	U	ND< 2.15	U	ND< 2.41	U	ND< 2.14	U	ND< 2.25	U	ND< 2.63	U	ND< 2.31	U	ND< 2.45	U
Methylcyclohexane		ND< 2.37	U	ND< 2.14	U	ND< 2.35	U	ND< 1.84	U	ND< 2.60	U	ND< 2.15	U	ND< 2.41	U	ND< 2.14	U	ND< 2.25	U	ND< 2.63	U	ND< 2.31	U	ND< 2.45	U
Methylene Chloride	100000	ND< 5.92	U	ND< 5.35	U	ND< 5.88	U	ND< 4.60	U	ND< 6.49	U	ND< 5.38	U	ND< 6.02	U	ND< 5.34	U	ND< 5.63	U	ND< 6.56	U	ND< 5.77	U	ND< 6.12	U
M-P-Xylene		ND< 2.37	U	ND< 2.14	U	ND< 2.35	U	ND< 1.84	U	ND< 2.60	U	ND< 2.15	U	ND< 2.41	U	ND< 2.14	U	ND< 2.25	U	ND< 2.63	U	ND< 2.31	U	ND< 2.45	U
Naphthalene	100000	ND< 5.92	U	ND< 5.35	U	ND< 5.88	U	ND< 4.60	U	ND< 6.49	U	ND< 5.38	U	ND< 6.02	U	ND< 5.34	U	ND< 5.63	U	ND< 6.56	U	ND< 5.77	U	ND< 6.12	U
N-Butylbenzene	100000	ND< 2.37	U	ND< 2.14	U	ND< 2.35	U	ND< 1.84	U	ND< 2.60	U	ND< 2.15	U	ND< 2.41	U	ND< 2.14	U	ND< 2.25	U	ND< 2.63	U	ND< 2.31	U	ND< 2.45	U
N-Propylbenzene	100000	ND< 2.37	U	ND< 2.14	U	ND< 2.35	U	ND< 1.84	U	ND< 2.60	U	ND< 2.15	U	ND< 2.41	U	ND< 2.14	U	ND< 2.25	U	ND< 2.63	U	ND< 2.31	U	ND< 2.45	U
O-Xylene (1,2-Dimethylbenzene)		ND< 2.37	U	ND< 2.14	U	ND< 2.35	U	ND< 1.84	U	ND< 2.60	U	ND< 2.15	U	ND< 2.41	U	ND< 2.14	U	ND< 2.25	U	ND< 2.63	U	ND< 2.31	U	ND< 2.45	U
Sec-Butylbenzene	100000	ND< 2.37	U	ND< 2.14	U	ND< 2.35	U	ND< 1.84	U	ND< 2.60	U	ND< 2.15	U	ND< 2.41	U	ND< 2.14	U	ND< 2.25	U	ND< 2.63	U	ND< 2.31	U	ND< 2.45	U
Styrene		ND< 5.92	U	ND< 5.35	U	ND< 5.88	U	ND< 4.60	U	ND< 6.49	U	ND< 5.38	U	ND< 6.02	U	ND< 5.34	U	ND< 5.63	U	ND< 6.56	U	ND< 5.77	U	ND< 6.12	U
T-Butylbenzene	100000	ND< 2.37	U	ND< 2.14	U	ND< 2.35	U	ND< 1.84	U	ND< 2.60	U	ND< 2.15	U	ND< 2.41	U	ND< 2.14	U	ND< 2.25	U	ND< 2.63	U	ND< 2.31	U	ND< 2.45	U
Tetrachloroethylene (PCE)	19000	ND< 2.37	U	ND< 2.14	U	ND< 2.35	U	ND< 1.84	U	ND< 2.60	U	ND< 2.15	U	ND< 2.41	U	ND< 2.14	U	ND< 2.25	U	ND< 2.63	U	ND< 2.31	U	ND< 2.45	U
Toluene	100000	ND< 2.37	U	ND< 2.14	U	ND< 2.35	U	ND< 1.84	U	ND< 2.60	U	ND< 2.15	U	ND< 2.41	U	ND< 2.14	U	ND< 2.25	U	ND< 2.63	U	ND< 2.31	U	ND< 2.45	U
Trans-1,2-Dichloroethene	100000	ND< 2.37	U	ND< 2.14	U	ND< 2.35	U	ND< 1.84	U	ND< 2.60	U	ND< 2.15	U	ND< 2.41	U	ND< 2.14	U	ND< 2.25	U	ND< 2.63	U	ND< 2.31	U	ND< 2.45	U
Trans-1,3-Dichloropropene		ND< 2.37	U	ND< 2.14	U	ND< 2.35	U	ND< 1.84	U	ND< 2.60	U	ND< 2.15	U	ND< 2.41	U	ND< 2.14	U	ND< 2.25	U	ND< 2.63	U	ND< 2.31	U	ND< 2.45	U
Trichloroethylene (TCE)	21000	ND< 2.37	U	ND< 2.14	U	ND< 2.35	U	ND< 1.84	U	ND< 2.60	U	ND< 2.15	U	ND< 2.41	U	ND< 2.14	U	ND< 2.25	U	ND< 2.63	U	ND< 2.31	U	ND< 2.45	U
Trichlorofluoromethane		ND< 2.37	U	ND< 2.14	U	ND< 2.35	U	ND< 1.84	U	ND< 2.60	U	ND< 2.15	U	ND< 2.41	U	ND< 2.14	U	ND< 2.25	U	ND< 2.63	U	ND< 2.31	U	ND< 2.45	U
Vinyl Chloride	900	ND< 2.37	U	ND< 2.14	U	ND< 2.35	U	ND< 1.84	U	ND< 2.60	U	ND< 2.15	U	ND< 2.41	U	ND< 2.14	U	ND< 2.25	U	ND< 2.63	U	ND< 2.31	U	ND< 2.45	U

NOTES:

1. Soil sample analytical results are compared to the New York State Department of Environmental Conservation (NYSDEC) Title 6 of the official compilation of New York Codes, Rules, and Regulations (NYCRR) Part 375 Restricted Residential Soil Cleanup Objectives (RRSCOs).
2. RRSCO exceedances are in bold and highlighted yellow.
3. ND = Not Detected
4. Results shown as "ND" with Reporting Limits exceeding RRSCOs are in bold.
5. VOCs = Volatile Organic Compounds
6. µg/kg = micrograms per kilogram.
7. Qualifier (Q) definitions are provided in the official lab reports.

TABLE 9A: Volatile Organic Compounds (VOCs) in Soil
Surface soil samples collected outside of AOCs
Soil Sample Results (non-QA/QC)
Hudson River Psychiatric Center - North BCP Site, Poughkeepsie, NY
PVE Sheffler File #560909

	Date Sampled	5/15/2014		5/2/2014		5/2/2014		5/2/2014		5/2/2014		5/2/2014		5/2/2014		5/2/2014		5/2/2014		5/2/2014		5/2/2014		5/2/2014	
	Location	SS-6B		SS-7		SS-7		SS-8		SS-8		SS-9		SS-9		SS-10		SS-10		SS-11		SS-11		SS-12	
	Sample ID	SS-6B 12-24"		SS-7 0-2"		SS-7 12-20"		SS-8 0-2"		SS-8 12-22"		SS-9 0-2"		SS-9 12-15"		SS-10 0-2"		SS-10 12-20"		SS-11 0-2"		SS-11 12-19"		SS-12 0-2"	
Analyte	RRSCOs	Result	Q	Result	Q	Result	Q	Result	Q	Result	Q	Result	Q	Result	Q	Result	Q	Result	Q	Result	Q	Result	Q	Result	Q
VOCs (µg/kg)																									
1,1,1-Trichloroethane	100000	ND< 1.80	U	ND< 2.17	U	ND< 1.63	U	ND< 2.21	U	ND< 1.72	U	ND< 2.05	U	ND< 1.76	U	ND< 2.30	U	ND< 1.62	U	ND< 2.04	U	ND< 2.52	U	ND< 3.01	U
1,1,2,2-Tetrachloroethane		ND< 1.80	U	ND< 2.17	U	ND< 1.63	U	ND< 2.21	U	ND< 1.72	U	ND< 2.05	U	ND< 1.76	U	ND< 2.30	U	ND< 1.62	U	ND< 2.04	U	ND< 2.52	U	ND< 3.01	U
1,1,2-Trichloro-1,2,2-Trifluoroethane		ND< 1.80	U	ND< 2.17	U	ND< 1.63	U	ND< 2.21	U	ND< 1.72	U	ND< 2.05	U	ND< 1.76	U	ND< 2.30	U	ND< 1.62	U	ND< 2.04	U	ND< 2.52	U	ND< 3.01	U
1,1,2-Trichloroethane		ND< 1.80	U	ND< 2.17	U	ND< 1.63	U	ND< 2.21	U	ND< 1.72	U	ND< 2.05	U	ND< 1.76	U	ND< 2.30	U	ND< 1.62	U	ND< 2.04	U	ND< 2.52	U	ND< 3.01	U
1,1-Dichloroethane	26000	ND< 1.80	U	ND< 2.17	U	ND< 1.63	U	ND< 2.21	U	ND< 1.72	U	ND< 2.05	U	ND< 1.76	U	ND< 2.30	U	ND< 1.62	U	ND< 2.04	U	ND< 2.52	U	ND< 3.01	U
1,1-Dichloroethene	100000	ND< 1.80	U	ND< 2.17	U	ND< 1.63	U	ND< 2.21	U	ND< 1.72	U	ND< 2.05	U	ND< 1.76	U	ND< 2.30	U	ND< 1.62	U	ND< 2.04	U	ND< 2.52	U	ND< 3.01	U
1,2,3-Trichlorobenzene		ND< 4.51	U	ND< 5.43	U	ND< 4.08	U	ND< 5.53	U	ND< 4.31	U	ND< 5.13	U	ND< 4.40	U	ND< 5.76	U	ND< 4.06	U	ND< 5.11	U	ND< 6.30	U	ND< 7.52	U
1,2,4-Trichlorobenzene		ND< 4.51	U	ND< 5.43	U	ND< 4.08	U	ND< 5.53	U	ND< 4.31	U	ND< 5.13	U	ND< 4.40	U	ND< 5.76	U	ND< 4.06	U	ND< 5.11	U	ND< 6.30	U	ND< 7.52	U
1,2,4-Trimethylbenzene	52000	ND< 1.80	U	ND< 2.17	U	ND< 1.63	U	ND< 2.21	U	ND< 1.72	U	ND< 2.05	U	ND< 1.76	U	ND< 2.30	U	ND< 1.62	U	ND< 2.04	U	ND< 2.52	U	ND< 3.01	U
1,2-Dibromo-3-Chloropropane		ND< 9.02	U	ND< 10.9	U	ND< 8.17	U	ND< 11.1	U	ND< 8.62	U	ND< 10.3	U	ND< 8.80	U	ND< 11.5	U	ND< 8.12	U	ND< 10.2	U	ND< 12.6	U	ND< 15.0	U
1,2-Dibromoethane (Ethylene Dibromide)		ND< 1.80	U	ND< 2.17	U	ND< 1.63	U	ND< 2.21	U	ND< 1.72	U	ND< 2.05	U	ND< 1.76	U	ND< 2.30	U	ND< 1.62	U	ND< 2.04	U	ND< 2.52	U	ND< 3.01	U
1,2-Dichlorobenzene	100000	ND< 1.80	U	ND< 2.17	U	ND< 1.63	U	ND< 2.21	U	ND< 1.72	U	ND< 2.05	U	ND< 1.76	U	ND< 2.30	U	ND< 1.62	U	ND< 2.04	U	ND< 2.52	U	ND< 3.01	U
1,2-Dichloroethane	3100	ND< 1.80	U	ND< 2.17	U	ND< 1.63	U	ND< 2.21	U	ND< 1.72	U	ND< 2.05	U	ND< 1.76	U	ND< 2.30	U	ND< 1.62	U	ND< 2.04	U	ND< 2.52	U	ND< 3.01	U
1,2-Dichloropropane		ND< 1.80	U	ND< 2.17	U	ND< 1.63	U	ND< 2.21	U	ND< 1.72	U	ND< 2.05	U	ND< 1.76	U	ND< 2.30	U	ND< 1.62	U	ND< 2.04	U	ND< 2.52	U	ND< 3.01	U
1,3,5-Trimethylbenzene (Mesitylene)	52000	ND< 1.80	U	ND< 2.17	U	ND< 1.63	U	ND< 2.21	U	ND< 1.72	U	ND< 2.05	U	ND< 1.76	U	ND< 2.30	U	ND< 1.62	U	ND< 2.04	U	ND< 2.52	U	ND< 3.01	U
1,3-Dichlorobenzene	49000	ND< 1.80	U	ND< 2.17	U	ND< 1.63	U	ND< 2.21	U	ND< 1.72	U	ND< 2.05	U	ND< 1.76	U	ND< 2.30	U	ND< 1.62	U	ND< 2.04	U	ND< 2.52	U	ND< 3.01	U
1,4-Dichlorobenzene	13000	ND< 1.80	U	ND< 2.17	U	ND< 1.63	U	ND< 2.21	U	ND< 1.72	U	ND< 2.05	U	ND< 1.76	U	ND< 2.30	U	ND< 1.62	U	ND< 2.04	U	ND< 2.52	U	ND< 3.01	U
1,4-Dioxane (P-Dioxane)	13000	ND< 18.0	U	ND< 21.7	U	ND< 16.3	U	ND< 22.1	U	ND< 17.2	U	ND< 20.5	U	ND< 17.6	U	ND< 23.0	U	ND< 16.2	U	ND< 20.4	U	ND< 25.2	U	ND< 30.1	U
2-Hexanone		ND< 4.51	U	ND< 5.43	U	ND< 4.08	U	ND< 5.53	U	ND< 4.31	U	ND< 5.13	U	ND< 4.40	U	ND< 5.76	U	ND< 4.06	U	ND< 5.11	U	ND< 6.30	U	ND< 7.52	U
Acetone	100000	ND< 9.02	U	ND< 10.9	U	ND< 8.17	U	ND< 11.1	U	ND< 8.62	U	ND< 10.3	U	ND< 8.80	U	ND< 11.5	U	ND< 8.12	U	ND< 10.2	U	ND< 12.6	U	ND< 15.0	U
Benzene	4800	ND< 1.80	U	ND< 2.17	U	ND< 1.63	U	ND< 2.21	U	ND< 1.72	U	ND< 2.05	U	ND< 1.76	U	ND< 2.30	U	ND< 1.62	U	ND< 2.04	U	ND< 2.52	U	ND< 3.01	U
Bromochloromethane		ND< 4.51	U	ND< 5.43	U	ND< 4.08	U	ND< 5.53	U	ND< 4.31	U	ND< 5.13	U	ND< 4.40	U	ND< 5.76	U	ND< 4.06	U	ND< 5.11	U	ND< 6.30	U	ND< 7.52	U
Bromodichloromethane		ND< 1.80	U	ND< 2.17	U	ND< 1.63	U	ND< 2.21	U	ND< 1.72	U	ND< 2.05	U	ND< 1.76	U	ND< 2.30	U	ND< 1.62	U	ND< 2.04	U	ND< 2.52	U	ND< 3.01	U
Bromoform		ND< 4.51	U	ND< 5.43	U	ND< 4.08	U	ND< 5.53	U	ND< 4.31	U	ND< 5.13	U	ND< 4.40	U	ND< 5.76	U	ND< 4.06	U	ND< 5.11	U	ND< 6.30	U	ND< 7.52	U
Bromomethane		ND< 1.80	U	ND< 2.17	U	ND< 1.63	U	ND< 2.21	U	ND< 1.72	U	ND< 2.05	U	ND< 1.76	U	ND< 2.30	U	ND< 1.62	U	ND< 2.04	U	ND< 2.52	U	ND< 3.01	U
Carbon Disulfide		ND< 1.80	U	ND< 2.17	U	ND< 1.63	U	ND< 2.21	U	ND< 1.72	U	ND< 2.05	U	ND< 1.76	U	ND< 2.30	U	ND< 1.62	U	ND< 2.04	U	ND< 2.52	U	ND< 3.01	U
Carbon Tetrachloride	2400	ND< 1.80	U	ND< 2.17	U	ND< 1.63	U	ND< 2.21	U	ND< 1.72	U	ND< 2.05	U	ND< 1.76	U	ND< 2.30	U	ND< 1.62	U	ND< 2.04	U	ND< 2.52	U	ND< 3.01	U
Chlorobenzene	100000	ND< 1.80	U	ND< 2.17	U	ND< 1.63	U	ND< 2.21	U	ND< 1.72	U	ND< 2.05	U	ND< 1.76	U	ND< 2.30	U	ND< 1.62	U	ND< 2.04	U	ND< 2.52	U	ND< 3.01	U
Chloroethane		ND< 1.80	U	ND< 2.17	U	ND< 1.63	U	ND< 2.21	U	ND< 1.72	U	ND< 2.05	U	ND< 1.76	U	ND< 2.30	U	ND< 1.62	U	ND< 2.04	U	ND< 2.52	U	ND< 3.01	U
Chloroform	49000	ND< 1.80	U	ND< 2.17	U	ND< 1.63	U	ND< 2.21	U	ND< 1.72	U	ND< 2.05	U	ND< 1.76	U	ND< 2.30	U	ND< 1.62	U	ND< 2.04	U	ND< 2.52	U	ND< 3.01	U
Chloromethane		ND< 1.80	U	ND< 2.17	U	ND< 1.63	U	ND< 2.21	U	ND< 1.72	U	ND< 2.05	U	ND< 1.76	U	ND< 2.30	U	ND< 1.62	U	ND< 2.04	U	ND< 2.52	U	ND< 3.01	U
Cis-1,2-Dichloroethylene	100000	ND< 1.80	U	ND< 2.17	U	ND< 1.63	U	ND< 2.21	U	ND< 1.72	U	ND< 2.05	U	ND< 1.76	U	ND< 2.30	U	ND< 1.62	U	ND< 2.04	U	ND< 2.52	U	ND< 3.01	U
Cis-1,3-Dichloropropene		ND< 1.80	U	ND< 2.17	U	ND< 1.63	U	ND< 2.21	U	ND< 1.72	U	ND< 2.05	U	ND< 1.76	U	ND< 2.30	U	ND< 1.62	U	ND< 2.04	U	ND< 2.52	U	ND< 3.01	U
Cyclohexane		ND< 9.02	U	ND< 10.9	U	ND< 8.17	U	ND< 11.1	U	ND< 8.62	U	ND< 10.3	U	ND< 8.80	U	ND< 11.5	U	ND< 8.12	U	ND< 10.2	U	ND< 12.6	U	ND< 15.0	U
Cymene		ND< 1.80	U	ND< 2.17	U	ND< 1.63	U	ND< 2.21	U	ND< 1.72	U	ND< 2.05	U	ND< 1.76	U	ND< 2.30	U	ND< 1.62	U	ND< 2.04	U	ND< 2.52	U	ND< 3.01	U
Dibromochloromethane		ND< 1.80	U	ND< 2.17	U	ND< 1.63	U	ND< 2.21	U	ND< 1.72	U	ND< 2.05	U	ND< 1.76	U	ND< 2.30	U	ND< 1.62	U	ND< 2.04	U	ND< 2.52	U	ND< 3.01	U
Dichlorodifluoromethane		ND< 1.80	U	ND< 2.17	U	ND< 1.63	U	ND< 2.21	U	ND< 1.72	U	ND< 2.05	U	ND< 1.76	U	ND< 2.30	U	ND< 1.62	U	ND< 2.04	U	ND< 2.52	U	ND< 3.01	U
Ethylbenzene	41000	ND< 1.80	U	ND< 2.17	U	ND< 1.63	U	ND< 2.21	U	ND< 1.72	U	ND< 2.05	U	ND< 1.76	U	ND< 2.30	U	ND< 1.62	U	ND< 2.04	U	ND< 2.52	U	ND< 3.01	U
Isopropylbenzene (Cumene)		ND< 1.80	U	ND< 2.17	U	ND< 1.63	U	ND< 2.21	U	ND< 1.72	U	ND< 2.05	U	ND< 1.76	U	ND< 2.30	U	ND< 1.62	U	ND< 2.04	U	ND< 2.52	U	ND< 3.01	U
Methyl Acetate		ND< 1.80	U	ND< 2.17	U	ND< 1.63	U	ND< 2.21	U	ND< 1.72	U	ND< 2.05	U	ND< 1.76	U	ND< 2.30	U	ND< 1.62	U	ND< 2.04	U	ND< 2.52	U	ND< 3.01	U
Methyl Ethyl Ketone (2-Butanone)	100000	ND< 9.02	U	ND< 10.9	U	ND< 8.17	U	ND< 11.1	U	ND< 8.62	U	ND< 10.3	U	ND< 8.80	U	ND< 11.5	U	ND< 8.12	U	ND< 10.2	U	ND< 12.6	U	ND< 15.0	U
Methyl Isobutyl Ketone (4-Methyl-2-Pentanone)		ND< 4.51	U	ND< 5.43	U	ND< 4.08	U	ND< 5.53	U	ND< 4.31	U	ND< 5.13	U	ND< 4.40	U	ND< 5.76	U	ND< 4.06	U	ND< 5.11	U	ND< 6.30	U	ND< 7.52	U
Methyl Tert-Butyl Ether (MTBE)	100000	ND< 1.80	U	ND< 2.17	U	ND< 1.63	U	ND< 2.21	U	ND< 1.72	U	ND< 2.05	U	ND< 1.76	U	ND< 2.30	U	ND< 1.62	U	ND< 2.04	U	ND< 2.52	U	ND< 3.01	U
Methylcyclohexane		ND< 1.80	U	ND< 2.17	U	ND< 1.63	U	ND< 2.21	U	ND< 1.72	U	ND< 2.05	U	ND< 1.76	U	ND< 2.30	U	ND< 1.62	U	ND< 2.04	U	ND< 2.52	U	ND< 3.01	U
Methylene Chloride	100000	ND< 4.51	U	ND< 5.43	U	ND< 4.08	U	ND< 5.53	U	ND< 4.31	U	ND< 5.13	U	ND< 4.40	U	ND< 5.76	U	ND< 4.06	U	ND< 5.11	U	ND< 6.30	U	ND< 7.52	U
M-P-Xylene		ND< 1.80	U	ND< 2.17	U	ND< 1.63	U	ND< 2.21	U	ND< 1.72	U	ND< 2.05	U	ND< 1.76	U	ND< 2.30	U	ND< 1.62	U	ND< 2.04	U	ND< 2.52	U	ND< 3.01	U
Naphthalene	100000	ND< 4.51	U	ND< 5.43	U	ND< 4.08	U	ND< 5.53	U	ND< 4.31	U	ND< 5.13	U	ND< 4.40	U	ND< 5.76	U	ND< 4.06	U	ND< 5.11	U	ND< 6.30	U	ND< 7.52	U
N-Butylbenzene	100000	ND< 1.80	U	ND< 2.17	U	ND< 1.63	U	ND< 2.21	U	ND< 1.72	U	ND< 2.05	U	ND< 1.76	U	ND< 2.30	U	ND< 1.62	U	ND< 2.04	U	ND< 2.52	U	ND< 3.01	U
N-Propylbenzene	100000	ND< 1.80	U	ND< 2.17	U	ND< 1.63	U	ND< 2.21	U	ND< 1.72	U	ND< 2.05	U	ND< 1.76	U	ND< 2.30	U	ND< 1.62	U	ND< 2.04	U	ND< 2.52	U	ND< 3.01	U
O-Xylene (1,2-Dimethylbenzene)		ND< 1.80	U	ND< 2.17	U	ND< 1.63	U	ND< 2.21	U	ND< 1.72	U	ND< 2.05	U	ND< 1.76	U	ND< 2.30	U	ND< 1.62	U	ND< 2.04	U	ND< 2.52	U	ND< 3.01	U
Sec-Butylbenzene	100000	ND< 1.80	U	ND< 2.17	U	ND< 1.63	U	ND< 2.21	U	ND< 1.72	U	ND< 2.05	U	ND< 1.76	U	ND< 2.30	U	ND< 1.62	U	ND< 2.04	U	ND< 2.52	U	ND< 3.01	U
Styrene		ND< 4.51	U	ND< 5.43	U	ND< 4.08	U	ND< 5.53	U	ND< 4.31	U	ND< 5.13	U	ND< 4.40	U	ND< 5.76	U	ND< 4.06	U	ND< 5.11	U	ND< 6.30	U	ND< 7.52	U
T-Butylbenzene	100000	ND< 1.80	U	ND< 2.17	U	ND< 1.63	U	ND< 2.21	U	ND< 1.72	U	ND< 2.05	U	ND< 1.76	U	ND< 2.30	U	ND< 1.62	U	ND< 2.04	U	ND< 2.52	U	ND< 3.01	U
Tetrachloroethylene (PCE)	19000	ND< 1.80	U	ND< 2.17	U	ND< 1.63	U	ND< 2.21	U	ND< 1.72	U	ND< 2.05	U	ND< 1.76	U	ND< 2.30	U	ND< 1.62	U	ND< 2.04	U	ND< 2.52	U	ND< 3.01	U
Toluene	100000	ND< 1.80	U	ND< 2.17	U	ND< 1.63	U	ND< 2.21	U	ND< 1.72	U	ND< 2.05	U	ND< 1.76	U	ND< 2.30	U	ND< 1.62	U	ND< 2.04	U	ND< 2.52	U	ND< 3.01	U
Trans-1,2-Dichloroethene	100000	ND< 1.80	U	ND< 2.17	U	ND< 1.63	U	ND< 2.21	U	ND< 1.72	U	ND< 2.05	U	ND< 1.76	U	ND< 2.30	U	ND< 1.62	U	ND< 2.04	U	ND< 2.52	U	ND< 3.01	U
Trans-1,3-Dichloropropene		ND< 1.80	U	ND< 2.17	U	ND< 1.63	U	ND< 2.21	U	ND< 1.72	U	ND< 2.05	U	ND< 1.76	U	ND< 2.30	U	ND< 1.62	U	ND< 2.04	U	ND< 2.52	U	ND< 3.01	U
Trichloroethylene (TCE)	21000	ND< 1.80	U	ND< 2.17	U	ND< 1.63	U	ND< 2.21	U	ND< 1.72	U	ND< 2.05	U	ND< 1.76	U	ND< 2.30	U	ND< 1.62	U	ND< 2.04	U	ND< 2.52	U	ND< 3.01	U
Trichlorofluoromethane		ND< 1.80	U	ND< 2.17	U	ND< 1.63	U	ND< 2.21	U	ND< 1.72	U	ND< 2.05	U	ND< 1.76	U	ND< 2.30	U	ND< 1.62	U	ND< 2.04	U	ND< 2.52	U	ND< 3.01	U
Vinyl Chloride	900	ND< 1.80	U	ND< 2.17	U	ND< 1.63	U	ND< 2.21	U	ND< 1.72	U	ND< 2.05	U	ND< 1.76	U	ND< 2.30	U	ND< 1.62	U	ND< 2.04	U	ND< 2.52	U	ND< 3.01	U

NOTES:

1. Soil sample analytical results are compared to the New York State Department of Environmental Conservation (NYSDEC) Title 6 of the official compilation of New York Codes, Rules, and Regulations (NYCRR) Part 375 Restricted Residential Soil Cleanup Objectives (RRSCOs).
2. RRSCO exceedances are in bold and highlighted yellow.
3. ND = Not Detected
4. Results shown as "ND" with Reporting Limits exceeding RRSCOs are in bold.
5. VOCs = Volatile Organic Compounds
6. µg/kg = micrograms per kilogram.
7. Qualifier (Q) definitions are provided in the official lab reports.

TABLE 9A: Volatile Organic Compounds (VOCs) in Soil
Surface soil samples collected outside of AOCs
Soil Sample Results (non-QA/QC)
Hudson River Psychiatric Center - North BCP Site, Poughkeepsie, NY
PVE Sheffler File #560909

	Date Sampled	5/2/2014		5/2/2014		5/2/2014		5/2/2014		5/1/2014		5/1/2014		5/1/2014		5/1/2014		5/1/2014		5/1/2014		5/1/2014		5/1/2014	
	Location	SS-13		SS-13		SS-14		SS-14		SS-15		SS-15		SS-16		SS-16		SS-17		SS-17		SS-18		SS-18	
	Sample ID	SS-13 0-2"		SS-13 12-20"		SS-14 0-2"		SS-14 12-20"		SS-15 0-2"		SS-15 12-16"		SS-16 0-2"		SS-16 12-20"		SS-17 0-2"		SS-17 12-16"		SS-18 0-2"		SS-18 12-18"	
Analyte	RRSCOs	Result	Q	Result	Q	Result	Q	Result	Q	Result	Q	Result	Q	Result	Q	Result	Q	Result	Q	Result	Q	Result	Q	Result	Q
VOCs (µg/kg)																									
1,1,1-Trichloroethane	100000	ND< 2.23	U	ND< 2.32	U	ND< 2.70	U	ND< 1.85	U	ND< 2.11	U	ND< 1.82	U	ND< 2.64	U	ND< 1.81	U	ND< 2.40	U	ND< 1.88	U	ND< 1.91	U	ND< 1.79	U
1,1,2,2-Tetrachloroethane		ND< 2.23	U	ND< 2.32	U	ND< 2.70	U	ND< 1.85	U	ND< 2.11	U	ND< 1.82	U	ND< 2.64	U	ND< 1.81	U	ND< 2.40	U	ND< 1.88	U	ND< 1.91	U	ND< 1.79	U
1,1,2-Trichloro-1,2,2-Trifluoroethane		ND< 2.23	U	ND< 2.32	U	ND< 2.70	U	ND< 1.85	U	ND< 2.11	U	ND< 1.82	U	ND< 2.64	U	ND< 1.81	U	ND< 2.40	U	ND< 1.88	U	ND< 1.91	U	ND< 1.79	U
1,1,2-Trichloroethane		ND< 2.23	U	ND< 2.32	U	ND< 2.70	U	ND< 1.85	U	ND< 2.11	U	ND< 1.82	U	ND< 2.64	U	ND< 1.81	U	ND< 2.40	U	ND< 1.88	U	ND< 1.91	U	ND< 1.79	U
1,1-Dichloroethane	26000	ND< 2.23	U	ND< 2.32	U	ND< 2.70	U	ND< 1.85	U	ND< 2.11	U	ND< 1.82	U	ND< 2.64	U	ND< 1.81	U	ND< 2.40	U	ND< 1.88	U	ND< 1.91	U	ND< 1.79	U
1,1-Dichloroethene	100000	ND< 2.23	U	ND< 2.32	U	ND< 2.70	U	ND< 1.85	U	ND< 2.11	U	ND< 1.82	U	ND< 2.64	U	ND< 1.81	U	ND< 2.40	U	ND< 1.88	U	ND< 1.91	U	ND< 1.79	U
1,2,3-Trichlorobenzene		ND< 5.56	U	ND< 5.81	U	ND< 6.76	U	ND< 4.63	U	ND< 5.27	U	ND< 4.56	U	ND< 6.59	U	ND< 4.53	U	ND< 6.01	U	ND< 4.70	U	ND< 4.77	U	ND< 4.46	U
1,2,4-Trichlorobenzene		ND< 5.56	U	ND< 5.81	U	ND< 6.76	U	ND< 4.63	U	ND< 5.27	U	ND< 4.56	U	ND< 6.59	U	ND< 4.53	U	ND< 6.01	U	ND< 4.70	U	ND< 4.77	U	ND< 4.46	U
1,2,4-Trimethylbenzene	52000	ND< 2.23	U	ND< 2.32	U	ND< 2.70	U	ND< 1.85	U	ND< 2.11	U	ND< 1.82	U	ND< 2.64	U	ND< 1.81	U	ND< 2.40	U	ND< 1.88	U	ND< 1.91	U	ND< 1.79	U
1,2-Dibromo-3-Chloropropane		ND< 11.1	U	ND< 11.6	U	ND< 13.5	U	ND< 9.26	U	ND< 10.5	U	ND< 9.11	U	ND< 13.2	U	ND< 9.06	U	ND< 12.0	U	ND< 9.40	U	ND< 9.53	U	ND< 8.93	U
1,2-Dibromoethane (Ethylene Dibromide)		ND< 2.23	U	ND< 2.32	U	ND< 2.70	U	ND< 1.85	U	ND< 2.11	U	ND< 1.82	U	ND< 2.64	U	ND< 1.81	U	ND< 2.40	U	ND< 1.88	U	ND< 1.91	U	ND< 1.79	U
1,2-Dichlorobenzene	100000	ND< 2.23	U	ND< 2.32	U	ND< 2.70	U	ND< 1.85	U	ND< 2.11	U	ND< 1.82	U	ND< 2.64	U	ND< 1.81	U	ND< 2.40	U	ND< 1.88	U	ND< 1.91	U	ND< 1.79	U
1,2-Dichloroethane	3100	ND< 2.23	U	ND< 2.32	U	ND< 2.70	U	ND< 1.85	U	ND< 2.11	U	ND< 1.82	U	ND< 2.64	U	ND< 1.81	U	ND< 2.40	U	ND< 1.88	U	ND< 1.91	U	ND< 1.79	U
1,2-Dichloropropane		ND< 2.23	U	ND< 2.32	U	ND< 2.70	U	ND< 1.85	U	ND< 2.11	U	ND< 1.82	U	ND< 2.64	U	ND< 1.81	U	ND< 2.40	U	ND< 1.88	U	ND< 1.91	U	ND< 1.79	U
1,3,5-Trimethylbenzene (Mesitylene)	52000	ND< 2.23	U	ND< 2.32	U	ND< 2.70	U	ND< 1.85	U	ND< 2.11	U	ND< 1.82	U	ND< 2.64	U	ND< 1.81	U	ND< 2.40	U	ND< 1.88	U	ND< 1.91	U	ND< 1.79	U
1,3-Dichlorobenzene	49000	ND< 2.23	U	ND< 2.32	U	ND< 2.70	U	ND< 1.85	U	ND< 2.11	U	ND< 1.82	U	ND< 2.64	U	ND< 1.81	U	ND< 2.40	U	ND< 1.88	U	ND< 1.91	U	ND< 1.79	U
1,4-Dichlorobenzene	13000	ND< 2.23	U	ND< 2.32	U	ND< 2.70	U	ND< 1.85	U	ND< 2.11	U	ND< 1.82	U	ND< 2.64	U	ND< 1.81	U	ND< 2.40	U	ND< 1.88	U	ND< 1.91	U	ND< 1.79	U
1,4-Dioxane (P-Dioxane)	13000	ND< 22.3	U	ND< 23.2	U	ND< 27.0	U	ND< 18.5	U	ND< 21.1	U	ND< 18.2	U	ND< 26.4	U	ND< 18.1	U	ND< 24.0	U	ND< 18.8	U	ND< 19.1	U	ND< 17.9	U
2-Hexanone		ND< 5.56	U	ND< 5.81	U	ND< 6.76	U	ND< 4.63	U	ND< 5.27	U	ND< 4.56	U	ND< 6.59	U	ND< 4.53	U	ND< 6.01	U	ND< 4.70	U	ND< 4.77	U	ND< 4.46	U
Acetone	100000	ND< 11.1	U	ND< 11.6	U	ND< 13.5	U	ND< 9.26	U	ND< 10.5	U	ND< 9.11	U	ND< 13.2	U	26.5		ND< 12.0	U	ND< 9.40	U	ND< 9.53	U	ND< 8.93	U
Benzene	4800	ND< 2.23	U	ND< 2.32	U	ND< 2.70	U	ND< 1.85	U	ND< 2.11	U	ND< 1.82	U	ND< 2.64	U	ND< 1.81	U	ND< 2.40	U	ND< 1.88	U	ND< 1.91	U	ND< 1.79	U
Bromochloromethane		ND< 5.56	U	ND< 5.81	U	ND< 6.76	U	ND< 4.63	U	ND< 5.27	U	ND< 4.56	U	ND< 6.59	U	ND< 4.53	U	ND< 6.01	U	ND< 4.70	U	ND< 4.77	U	ND< 4.46	U
Bromodichloromethane		ND< 2.23	U	ND< 2.32	U	ND< 2.70	U	ND< 1.85	U	ND< 2.11	U	ND< 1.82	U	ND< 2.64	U	ND< 1.81	U	ND< 2.40	U	ND< 1.88	U	ND< 1.91	U	ND< 1.79	U
Bromoform		ND< 5.56	U	ND< 5.81	U	ND< 6.76	U	ND< 4.63	U	ND< 5.27	U	ND< 4.56	U	ND< 6.59	U	ND< 4.53	U	ND< 6.01	U	ND< 4.70	U	ND< 4.77	U	ND< 4.46	U
Bromomethane		ND< 2.23	U	ND< 2.32	U	ND< 2.70	U	ND< 1.85	U	ND< 2.11	U	ND< 1.82	U	ND< 2.64	U	ND< 1.81	U	ND< 2.40	U	ND< 1.88	U	ND< 1.91	U	ND< 1.79	U
Carbon Disulfide		ND< 2.23	U	ND< 2.32	U	ND< 2.70	U	ND< 1.85	U	ND< 2.11	U	ND< 1.82	U	ND< 2.64	U	ND< 1.81	U	ND< 2.40	U	ND< 1.88	U	ND< 1.91	U	ND< 1.79	U
Carbon Tetrachloride	2400	ND< 2.23	U	ND< 2.32	U	ND< 2.70	U	ND< 1.85	U	ND< 2.11	U	ND< 1.82	U	ND< 2.64	U	ND< 1.81	U	ND< 2.40	U	ND< 1.88	U	ND< 1.91	U	ND< 1.79	U
Chlorobenzene	100000	ND< 2.23	U	ND< 2.32	U	ND< 2.70	U	ND< 1.85	U	ND< 2.11	U	ND< 1.82	U	ND< 2.64	U	ND< 1.81	U	ND< 2.40	U	ND< 1.88	U	ND< 1.91	U	ND< 1.79	U
Chloroethane		ND< 2.23	U	ND< 2.32	U	ND< 2.70	U	ND< 1.85	U	ND< 2.11	U	ND< 1.82	U	ND< 2.64	U	ND< 1.81	U	ND< 2.40	U	ND< 1.88	U	ND< 1.91	U	ND< 1.79	U
Chloroform	49000	ND< 2.23	U	ND< 2.32	U	ND< 2.70	U	ND< 1.85	U	ND< 2.11	U	ND< 1.82	U	ND< 2.64	U	ND< 1.81	U	ND< 2.40	U	ND< 1.88	U	ND< 1.91	U	ND< 1.79	U
Chloromethane		ND< 2.23	U	ND< 2.32	U	ND< 2.70	U	ND< 1.85	U	ND< 2.11	U	ND< 1.82	U	ND< 2.64	U	ND< 1.81	U	ND< 2.40	U	ND< 1.88	U	ND< 1.91	U	ND< 1.79	U
Cis-1,2-Dichloroethylene	100000	ND< 2.23	U	ND< 2.32	U	ND< 2.70	U	ND< 1.85	U	ND< 2.11	U	ND< 1.82	U	ND< 2.64	U	ND< 1.81	U	ND< 2.40	U	ND< 1.88	U	ND< 1.91	U	ND< 1.79	U
Cis-1,3-Dichloropropene		ND< 2.23	U	ND< 2.32	U	ND< 2.70	U	ND< 1.85	U	ND< 2.11	U	ND< 1.82	U	ND< 2.64	U	ND< 1.81	U	ND< 2.40	U	ND< 1.88	U	ND< 1.91	U	ND< 1.79	U
Cyclohexane		ND< 11.1	U	ND< 11.6	U	ND< 13.5	U	ND< 9.26	U	ND< 10.5	U	ND< 9.11	U	ND< 13.2	U	ND< 9.06	U	ND< 12.0	U	ND< 9.40	U	ND< 9.53	U	ND< 8.93	U
Cymene		ND< 2.23	U	ND< 2.32	U	ND< 2.70	U	ND< 1.85	U	ND< 2.11	U	ND< 1.82	U	ND< 2.64	U	ND< 1.81	U	ND< 2.40	U	ND< 1.88	U	ND< 1.91	U	ND< 1.79	U
Dibromochloromethane		ND< 2.23	U	ND< 2.32	U	ND< 2.70	U	ND< 1.85	U	ND< 2.11	U	ND< 1.82	U	ND< 2.64	U	ND< 1.81	U	ND< 2.40	U	ND< 1.88	U	ND< 1.91	U	ND< 1.79	U
Dichlorodifluoromethane		ND< 2.23	U	ND< 2.32	U	ND< 2.70	U	ND< 1.85	U	ND< 2.11	U	ND< 1.82	U	ND< 2.64	U	ND< 1.81	U	ND< 2.40	U	ND< 1.88	U	ND< 1.91	U	ND< 1.79	U
Ethylbenzene	41000	ND< 2.23	U	ND< 2.32	U	ND< 2.70	U	ND< 1.85	U	ND< 2.11	U	ND< 1.82	U	ND< 2.64	U	ND< 1.81	U	ND< 2.40	U	ND< 1.88	U	ND< 1.91	U	ND< 1.79	U
Isopropylbenzene (Cumene)		ND< 2.23	U	ND< 2.32	U	ND< 2.70	U	ND< 1.85	U	ND< 2.11	U	ND< 1.82	U	ND< 2.64	U	ND< 1.81	U	ND< 2.40	U	ND< 1.88	U	ND< 1.91	U	ND< 1.79	U
Methyl Acetate		ND< 2.23	U	ND< 2.32	U	ND< 2.70	U	13.3		ND< 2.11	U	ND< 1.82	U	ND< 2.64	U	ND< 1.81	U	ND< 2.40	U	ND< 1.88	U	ND< 1.91	U	ND< 1.79	U
Methyl Ethyl Ketone (2-Butanone)	100000	ND< 11.1	U	ND< 11.6	U	ND< 13.5	U	ND< 9.26	U	ND< 10.5	U	ND< 9.11	U	ND< 13.2	U	ND< 9.06	U	ND< 12.0	U	ND< 9.40	U	ND< 9.53	U	ND< 8.93	U
Methyl Isobutyl Ketone (4-Methyl-2-Pentanone)		ND< 5.56	U	ND< 5.81	U	ND< 6.76	U	ND< 4.63	U	ND< 5.27	U	ND< 4.56	U	ND< 6.59	U	ND< 4.53	U	ND< 6.01	U	ND< 4.70	U	ND< 4.77	U	ND< 4.46	U
Methyl Tert-Butyl Ether (MTBE)	100000	ND< 2.23	U	ND< 2.32	U	ND< 2.70	U	ND< 1.85	U	ND< 2.11	U	ND< 1.82	U	ND< 2.64	U	ND< 1.81	U	ND< 2.40	U	ND< 1.88	U	ND< 1.91	U	ND< 1.79	U
Methylcyclohexane		ND< 2.23	U	ND< 2.32	U	ND< 2.70	U	ND< 1.85	U	ND< 2.11	U	ND< 1.82	U	ND< 2.64	U	ND< 1.81	U	ND< 2.40	U	ND< 1.88	U	ND< 1.91	U	ND< 1.79	U
Methylene Chloride	100000	ND< 5.56	U	ND< 5.81	U	ND< 6.76	U	ND< 4.63	U	ND< 5.27	U	ND< 4.56	U	ND< 6.59	U	ND< 4.53	U	ND< 6.01	U	ND< 4.70	U	ND< 4.77	U	ND< 4.46	U
M-P-Xylene		ND< 2.23	U	ND< 2.32	U	ND< 2.70	U	ND< 1.85	U	ND< 2.11	U	ND< 1.82	U	ND< 2.64	U	ND< 1.81	U	ND< 2.40	U	ND< 1.88	U	ND< 1.91	U	ND< 1.79	U
Naphthalene	100000	ND< 5.56	U	ND< 5.81	U	ND< 6.76	U	ND< 4.63	U	ND< 5.27	U	ND< 4.56	U	ND< 6.59	U	ND< 4.53	U	ND< 6.01	U	ND< 4.70	U	ND< 4.77	U	ND< 4.46	U
N-Butylbenzene	100000	ND< 2.23	U	ND< 2.32	U	ND< 2.70	U	ND< 1.85	U	ND< 2.11	U	ND< 1.82	U	ND< 2.64	U	ND< 1.81	U	ND< 2.40	U	ND< 1.88	U	ND< 1.91	U	ND< 1.79	U
N-Propylbenzene	100000	ND< 2.23	U	ND< 2.32	U	ND< 2.70	U	ND< 1.85	U	ND< 2.11	U	ND< 1.82	U	ND< 2.64	U	ND< 1.81	U	ND< 2.40	U	ND< 1.88	U	ND< 1.91	U	ND< 1.79	U
O-Xylene (1,2-Dimethylbenzene)		ND< 2.23	U	ND< 2.32	U	ND< 2.70	U	ND< 1.85	U	ND< 2.11	U	ND< 1.82	U	ND< 2.64	U	ND< 1.81	U	ND< 2.40	U	ND< 1.88	U	ND< 1.91	U	ND< 1.79	U
Sec-Butylbenzene	100000	ND< 2.23	U	ND< 2.32	U	ND< 2.70	U	ND< 1.85	U	ND< 2.11	U	ND< 1.82	U	ND< 2.64	U	ND< 1.81	U	ND< 2.40	U	ND< 1.88	U	ND< 1.91	U	ND< 1.79	U
Styrene		ND< 5.56	U	ND< 5.81	U	ND< 6.76	U	ND< 4.63	U	ND< 5.27	U	ND< 4.56	U	ND< 6.59	U	ND< 4.53	U	ND< 6.01	U	ND< 4.70	U	ND< 4.77	U	ND< 4.46	U
T-Butylbenzene	100000	ND< 2.23	U	ND< 2.32	U	ND< 2.70	U	ND< 1.85	U	ND< 2.11	U	ND< 1.82	U	ND< 2.64	U	ND< 1.81	U	ND< 2.40	U	ND< 1.88	U	ND< 1.91	U	ND< 1.79	U
Tetrachloroethylene (PCE)	19000	ND< 2.23	U	ND< 2.32	U	ND< 2.70	U	ND< 1.85	U	ND< 2.11	U	ND< 1.82	U	ND< 2.64	U	ND< 1.81	U	ND< 2.40	U	ND< 1.88	U	ND< 1.91	U	ND< 1.79	U
Toluene	100000	ND< 2.23	U	ND< 2.32	U	ND< 2.70	U	ND< 1.85	U	ND< 2.11	U	ND< 1.82	U	ND< 2.64	U	ND< 1.81	U	ND< 2.40	U	ND< 1.88	U	ND< 1.91	U	ND< 1.79	U
Trans-1,2-Dichloroethene	100000	ND< 2.23	U	ND< 2.32	U	ND< 2.70	U	ND< 1.85	U	ND< 2.11	U	ND< 1.82	U	ND< 2.64	U	ND< 1.81	U	ND< 2.40	U	ND< 1.88	U	ND< 1.91	U	ND< 1.79	U
Trans-1,3-Dichloropropene		ND< 2.23	U	ND< 2.32	U	ND< 2.70	U	ND< 1.85	U	ND< 2.11	U	ND< 1.82	U	ND< 2.64	U	ND< 1.81	U	ND< 2.40	U	ND< 1.88	U	ND< 1.91	U	ND< 1.79	U
Trichloroethylene (TCE)	21000	ND< 2.23	U	ND< 2.32	U	ND< 2.70	U	ND< 1.85	U	ND< 2.11	U	ND< 1.82	U	ND< 2.64	U	ND< 1.81	U	ND< 2.40	U	ND< 1.88	U	ND< 1.91	U	ND< 1.79	U
Trichlorofluoromethane		ND< 2.23	U	ND< 2.32	U	ND< 2.70	U	ND< 1.85	U	ND< 2.11	U	ND< 1.82	U	ND< 2.64	U	ND< 1.81	U	ND< 2.40	U	ND< 1.88	U	ND< 1.91	U	ND< 1.79	U
Vinyl Chloride	900	ND< 2.23	U	ND< 2.32	U	ND< 2.70	U	ND< 1.85	U	ND< 2.11	U	ND< 1.82	U	ND< 2.64	U	ND< 1.81	U	ND< 2.40	U	ND< 1.88	U	ND< 1.91	U	ND< 1.79	U

NOTES:

1. Soil sample analytical results are compared to the New York State Department of Environmental Conservation (NYSDEC) Title 6 of the official compilation of New York Codes, Rules, and Regulations (NYCRR) Part 375 Restricted Residential Soil Cleanup Objectives (RRSCOs).
2. RRSCO exceedances are in bold and highlighted yellow.
3. ND = Not Detected
4. Results shown as "ND" with Reporting Limits exceeding RRSCOs are in bold.
5. VOCs = Volatile Organic Compounds
6. µg/kg = micrograms per kilogram.
7. Qualifier (Q) definitions are provided in the official lab reports.

TABLE 9A: Volatile Organic Compounds (VOCs) in Soil
Surface soil samples collected outside of AOCs
Soil Sample Results (non-QA/QC)
Hudson River Psychiatric Center - North BCP Site, Poughkeepsie, NY
PVE Sheffler File #560909

	Date Sampled	11/24/2014		12/15/2014		11/24/2014		12/15/2014		11/24/2014		12/15/2014		11/24/2014		12/15/2014		11/24/2014		12/15/2014		11/25/2014		12/15/2014	
	Location	SS-19		SS-19		SS-20		SS-20		SS-21		SS-21		SS-22		SS-22		SS-23		SS-23		SS-24		SS-24	
	Sample ID	SS-19 (0-2")		SS-19 2-24"		SS-20 (0-2")		SS-20 2-24"		SS-21 (0-2")		SS-21 2-24"		SS-22 (0-2")		SS-22 2-24"		SS-23 (0-2")		SS-23 2-24"		SS-24 (0-2")		SS-24 2-24"	
Analyte	RRSCOs	Result	Q	Result	Q	Result	Q	Result	Q	Result	Q	Result	Q	Result	Q	Result	Q	Result	Q	Result	Q	Result	Q	Result	Q
VOCs (µg/kg)																									
1,1,1-Trichloroethane	100000	ND< 2.95	U	ND< 3.33	U	ND< 2.35	U	ND< 2.15	U	ND< 2.82	U	ND< 2.26	U	ND< 2.23	U	ND< 2.09	U	ND< 2.21	U	ND< 1.94	U	ND< 2.68	U	ND< 1.93	U
1,1,2,2-Tetrachloroethane		ND< 2.95	U	ND< 3.33	U	ND< 2.35	U	ND< 2.15	U	ND< 2.82	U	ND< 2.26	U	ND< 2.23	U	ND< 2.09	U	ND< 2.21	U	ND< 1.94	U	ND< 2.68	U	ND< 1.93	U
1,1,2-Trichloro-1,2,2-Trifluoroethane		ND< 2.95	U	ND< 3.33	U	ND< 2.35	U	ND< 2.15	U	ND< 2.82	U	ND< 2.26	U	ND< 2.23	U	ND< 2.09	U	ND< 2.21	U	ND< 1.94	U	ND< 2.68	U	ND< 1.93	U
1,1,2-Trichloroethane		ND< 2.95	U	ND< 3.33	U	ND< 2.35	U	ND< 2.15	U	ND< 2.82	U	ND< 2.26	U	ND< 2.23	U	ND< 2.09	U	ND< 2.21	U	ND< 1.94	U	ND< 2.68	U	ND< 1.93	U
1,1-Dichloroethane	26000	ND< 2.95	U	ND< 3.33	U	ND< 2.35	U	ND< 2.15	U	ND< 2.82	U	ND< 2.26	U	ND< 2.23	U	ND< 2.09	U	ND< 2.21	U	ND< 1.94	U	ND< 2.68	U	ND< 1.93	U
1,1-Dichloroethene	100000	ND< 2.95	U	ND< 3.33	U	ND< 2.35	U	ND< 2.15	U	ND< 2.82	U	ND< 2.26	U	ND< 2.23	U	ND< 2.09	U	ND< 2.21	U	ND< 1.94	U	ND< 2.68	U	ND< 1.93	U
1,2,3-Trichlorobenzene		ND< 7.38	U	ND< 8.32	U	ND< 5.88	U	ND< 5.37	U	ND< 7.04	U	ND< 5.66	U	ND< 5.56	U	ND< 5.21	U	ND< 5.52	U	ND< 4.84	U	3.47	J	ND< 4.82	U
1,2,4-Trichlorobenzene		ND< 7.38	U	ND< 8.32	U	ND< 5.88	U	ND< 5.37	U	ND< 7.04	U	ND< 5.66	U	ND< 5.56	U	ND< 5.21	U	ND< 5.52	U	ND< 4.84	U	ND< 6.70	U	ND< 4.82	U
1,2,4-Trimethylbenzene	52000	ND< 2.95	U	ND< 3.33	U	ND< 2.35	U	ND< 2.15	U	ND< 2.82	U	ND< 2.26	U	ND< 2.23	U	ND< 2.09	U	ND< 2.21	U	ND< 1.94	U	ND< 2.68	U	ND< 1.93	U
1,2-Dibromo-3-Chloropropane		ND< 14.8	U	ND< 16.6	U	ND< 11.8	U	ND< 10.7	U	ND< 14.1	U	ND< 11.3	U	ND< 11.1	U	ND< 10.4	U	ND< 11.0	U	ND< 9.68	U	ND< 13.4	U	ND< 9.65	U
1,2-Dibromoethane (Ethylene Dibromide)		ND< 2.95	U	ND< 3.33	U	ND< 2.35	U	ND< 2.15	U	ND< 2.82	U	ND< 2.26	U	ND< 2.23	U	ND< 2.09	U	ND< 2.21	U	ND< 1.94	U	ND< 2.68	U	ND< 1.93	U
1,2-Dichlorobenzene	100000	ND< 2.95	U	ND< 3.33	U	ND< 2.35	U	ND< 2.15	U	ND< 2.82	U	ND< 2.26	U	ND< 2.23	U	ND< 2.09	U	ND< 2.21	U	ND< 1.94	U	1.41	J	ND< 1.93	U
1,2-Dichloroethane	3100	ND< 2.95	U	ND< 3.33	U	ND< 2.35	U	ND< 2.15	U	ND< 2.82	U	ND< 2.26	U	ND< 2.23	U	ND< 2.09	U	ND< 2.21	U	ND< 1.94	U	ND< 2.68	U	ND< 1.93	U
1,2-Dichloropropane		ND< 2.95	U	ND< 3.33	U	ND< 2.35	U	ND< 2.15	U	ND< 2.82	U	ND< 2.26	U	ND< 2.23	U	ND< 2.09	U	ND< 2.21	U	ND< 1.94	U	ND< 2.68	U	ND< 1.93	U
1,3,5-Trimethylbenzene (Mesitylene)	52000	ND< 2.95	U	ND< 3.33	U	ND< 2.35	U	ND< 2.15	U	ND< 2.82	U	ND< 2.26	U	ND< 2.23	U	ND< 2.09	U	ND< 2.21	U	ND< 1.94	U	ND< 2.68	U	ND< 1.93	U
1,3-Dichlorobenzene	49000	ND< 2.95	U	ND< 3.33	U	ND< 2.35	U	ND< 2.15	U	ND< 2.82	U	ND< 2.26	U	ND< 2.23	U	ND< 2.09	U	ND< 2.21	U	ND< 1.94	U	ND< 2.68	U	ND< 1.93	U
1,4-Dichlorobenzene	13000	ND< 2.95	U	ND< 3.33	U	ND< 2.35	U	ND< 2.15	U	ND< 2.82	U	ND< 2.26	U	ND< 2.23	U	ND< 2.09	U	ND< 2.21	U	ND< 1.94	U	1.49	J	ND< 1.93	U
1,4-Dioxane (P-Dioxane)	13000	ND< 29.5	U	ND< 33.3	U	ND< 23.5	U	ND< 21.5	U	ND< 28.2	U	ND< 22.6	U	ND< 22.3	U	ND< 20.9	U	ND< 22.1	U	ND< 19.4	U	ND< 26.8	U	ND< 19.3	U
2-Hexanone		ND< 7.38	U	ND< 8.32	U	ND< 5.88	U	ND< 5.37	U	ND< 7.04	U	ND< 5.66	U	ND< 5.56	U	ND< 5.21	U	ND< 5.52	U	ND< 4.84	U	ND< 6.70	U	ND< 4.82	U
Acetone	100000	ND< 14.8	U	ND< 16.6	U	ND< 11.8	U	ND< 10.7	U	ND< 14.1	U	ND< 11.3	U	ND< 11.1	U	ND< 10.4	U	ND< 11.0	U	ND< 9.68	U	ND< 13.4	U	ND< 9.65	U
Benzene	4800	ND< 2.95	U	ND< 3.33	U	ND< 2.35	U	ND< 2.15	U	ND< 2.82	U	ND< 2.26	U	ND< 2.23	U	ND< 2.09	U	ND< 2.21	U	ND< 1.94	U	ND< 2.68	U	ND< 1.93	U
Bromochloromethane		ND< 7.38	U	ND< 8.32	U	ND< 5.88	U	ND< 5.37	U	ND< 7.04	U	ND< 5.66	U	ND< 5.56	U	ND< 5.21	U	ND< 5.52	U	ND< 4.84	U	ND< 6.70	U	ND< 4.82	U
Bromodichloromethane		ND< 2.95	U	ND< 3.33	U	ND< 2.35	U	ND< 2.15	U	ND< 2.82	U	ND< 2.26	U	ND< 2.23	U	ND< 2.09	U	ND< 2.21	U	ND< 1.94	U	ND< 2.68	U	ND< 1.93	U
Bromoform		ND< 7.38	U	ND< 8.32	U	ND< 5.88	U	ND< 5.37	U	ND< 7.04	U	ND< 5.66	U	ND< 5.56	U	ND< 5.21	U	ND< 5.52	U	ND< 4.84	U	ND< 6.70	U	ND< 4.82	U
Bromomethane		ND< 2.95	U	ND< 3.33	U	ND< 2.35	U	ND< 2.15	U	ND< 2.82	U	ND< 2.26	U	ND< 2.23	U	ND< 2.09	U	ND< 2.21	U	ND< 1.94	U	ND< 2.68	U	ND< 1.93	U
Carbon Disulfide		ND< 2.95	U	ND< 3.33	U	ND< 2.35	U	ND< 2.15	U	ND< 2.82	U	ND< 2.26	U	ND< 2.23	U	ND< 2.09	U	ND< 2.21	U	ND< 1.94	U	ND< 2.68	U	ND< 1.93	U
Carbon Tetrachloride	2400	ND< 2.95	U	ND< 3.33	U	ND< 2.35	U	ND< 2.15	U	ND< 2.82	U	ND< 2.26	U	ND< 2.23	U	ND< 2.09	U	ND< 2.21	U	ND< 1.94	U	ND< 2.68	U	ND< 1.93	U
Chlorobenzene	100000	ND< 2.95	U	ND< 3.33	U	ND< 2.35	U	ND< 2.15	U	ND< 2.82	U	ND< 2.26	U	ND< 2.23	U	ND< 2.09	U	ND< 2.21	U	ND< 1.94	U	ND< 2.68	U	ND< 1.93	U
Chloroethane		ND< 2.95	U	ND< 3.33	U	ND< 2.35	U	ND< 2.15	U	ND< 2.82	U	ND< 2.26	U	ND< 2.23	U	ND< 2.09	U	ND< 2.21	U	ND< 1.94	U	ND< 2.68	U	ND< 1.93	U
Chloroform	49000	ND< 2.95	U	ND< 3.33	U	ND< 2.35	U	ND< 2.15	U	ND< 2.82	U	ND< 2.26	U	ND< 2.23	U	ND< 2.09	U	ND< 2.21	U	ND< 1.94	U	ND< 2.68	U	ND< 1.93	U
Chloromethane		ND< 2.95	U	ND< 3.33	U	ND< 2.35	U	ND< 2.15	U	ND< 2.82	U	ND< 2.26	U	ND< 2.23	U	ND< 2.09	U	ND< 2.21	U	ND< 1.94	U	ND< 2.68	U	ND< 1.93	U
Cis-1,2-Dichloroethylene	100000	ND< 2.95	U	ND< 3.33	U	ND< 2.35	U	ND< 2.15	U	ND< 2.82	U	ND< 2.26	U	ND< 2.23	U	ND< 2.09	U	ND< 2.21	U	ND< 1.94	U	ND< 2.68	U	ND< 1.93	U
Cis-1,3-Dichloropropene		ND< 2.95	U	ND< 3.33	U	ND< 2.35	U	ND< 2.15	U	ND< 2.82	U	ND< 2.26	U	ND< 2.23	U	ND< 2.09	U	ND< 2.21	U	ND< 1.94	U	ND< 2.68	U	ND< 1.93	U
Cyclohexane		ND< 14.8	U	ND< 16.6	U	ND< 11.8	U	ND< 10.7	U	ND< 14.1	U	ND< 11.3	U	ND< 11.1	U	ND< 10.4	U	ND< 11.0	U	ND< 9.68	U	ND< 13.4	U	ND< 9.65	U
Cymene		ND< 2.95	U	ND< 3.33	U	ND< 2.35	U	ND< 2.15	U	ND< 2.82	U	ND< 2.26	U	ND< 2.23	U	ND< 2.09	U	ND< 2.21	U	ND< 1.94	U	ND< 2.68	U	ND< 1.93	U
Dibromochloromethane		ND< 2.95	U	ND< 3.33	U	ND< 2.35	U	ND< 2.15	U	ND< 2.82	U	ND< 2.26	U	ND< 2.23	U	ND< 2.09	U	ND< 2.21	U	ND< 1.94	U	ND< 2.68	U	ND< 1.93	U
Dichlorodifluoromethane		ND< 2.95	U	ND< 3.33	U	ND< 2.35	U	ND< 2.15	U	ND< 2.82	U	ND< 2.26	U	ND< 2.23	U	ND< 2.09	U	ND< 2.21	U	ND< 1.94	U	ND< 2.68	U	ND< 1.93	U
Ethylbenzene	41000	ND< 2.95	U	ND< 3.33	U	ND< 2.35	U	ND< 2.15	U	ND< 2.82	U	ND< 2.26	U	ND< 2.23	U	ND< 2.09	U	ND< 2.21	U	ND< 1.94	U	ND< 2.68	U	ND< 1.93	U
Isopropylbenzene (Cumene)		ND< 2.95	U	ND< 3.33	U	ND< 2.35	U	ND< 2.15	U	ND< 2.82	U	ND< 2.26	U	ND< 2.23	U	ND< 2.09	U	ND< 2.21	U	ND< 1.94	U	ND< 2.68	U	ND< 1.93	U
Methyl Acetate		ND< 2.95	U	ND< 3.33	U	ND< 2.35	U	ND< 2.15	U	ND< 2.82	U	ND< 2.26	U	ND< 2.23	U	ND< 2.09	U	ND< 2.21	U	ND< 1.94	U	ND< 2.68	U	ND< 1.93	U
Methyl Ethyl Ketone (2-Butanone)	100000	ND< 14.8	U	ND< 16.6	U	ND< 11.8	U	ND< 10.7	U	ND< 14.1	U	ND< 11.3	U	ND< 11.1	U	ND< 10.4	U	ND< 11.0	U	ND< 9.68	U	ND< 13.4	U	ND< 9.65	U
Methyl Isobutyl Ketone (4-Methyl-2-Pentanone)		ND< 7.38	U	ND< 8.32	U	ND< 5.88	U	ND< 5.37	U	ND< 7.04	U	ND< 5.66	U	ND< 5.56	U	ND< 5.21	U	ND< 5.52	U	ND< 4.84	U	ND< 6.70	U	ND< 4.82	U
Methyl Tert-Butyl Ether (MTBE)	100000	ND< 2.95	U	ND< 3.33	U	ND< 2.35	U	ND< 2.15	U	ND< 2.82	U	ND< 2.26	U	ND< 2.23	U	ND< 2.09	U	ND< 2.21	U	ND< 1.94	U	ND< 2.68	U	ND< 1.93	U
Methylcyclohexane		ND< 2.95	U	ND< 3.33	U	ND< 2.35	U	ND< 2.15	U	ND< 2.82	U	ND< 2.26	U	ND< 2.23	U	ND< 2.09	U	ND< 2.21	U	ND< 1.94	U	ND< 2.68	U	ND< 1.93	U
Methylene Chloride	100000	ND< 7.38	U	ND< 8.32	U	ND< 5.88	U	ND< 5.37	U	ND< 7.04	U	ND< 5.66	U	ND< 5.56	U	ND< 5.21	U	ND< 5.52	U	ND< 4.84	U	ND< 6.70	U	ND< 4.82	U
M-P-Xylene		ND< 2.95	U	ND< 3.33	U	ND< 2.35	U	ND< 2.15	U	ND< 2.82	U	ND< 2.26	U	ND< 2.23	U	ND< 2.09	U	ND< 2.21	U	ND< 1.94	U	1.73	J	ND< 1.93	U
Naphthalene	100000	ND< 7.38	U	ND< 8.32	U	ND< 5.88	U	ND< 5.37	U	ND< 7.04	U	ND< 5.66	U	ND< 5.56	U	ND< 5.21	U	ND< 5.52	U	ND< 4.84	U	3.91	J	ND< 4.82	U
N-Butylbenzene	100000	ND< 2.95	U	ND< 3.33	U	ND< 2.35	U	ND< 2.15	U	ND< 2.82	U	ND< 2.26	U	ND< 2.23	U	ND< 2.09	U	ND< 2.21	U	ND< 1.94	U	ND< 2.68	U	ND< 1.93	U
N-Propylbenzene	100000	ND< 2.95	U	ND< 3.33	U	ND< 2.35	U	ND< 2.15	U	ND< 2.82	U	ND< 2.26	U	ND< 2.23	U	ND< 2.09	U	ND< 2.21	U	ND< 1.94	U	ND< 2.68	U	ND< 1.93	U
O-Xylene (1,2-Dimethylbenzene)		ND< 2.95	U	ND< 3.33	U	ND< 2.35	U	ND< 2.15	U	ND< 2.82	U	ND< 2.26	U	ND< 2.23	U	ND< 2.09	U	ND< 2.21	U	ND< 1.94	U	ND< 2.68	U	ND< 1.93	U
Sec-Butylbenzene	100000	ND< 2.95	U	ND< 3.33	U	ND< 2.35	U	ND< 2.15	U	ND< 2.82	U	ND< 2.26	U	ND< 2.23	U	ND< 2.09	U	ND< 2.21	U	ND< 1.94	U	ND< 2.68	U	ND< 1.93	U
Styrene		ND< 7.38	U	ND< 8.32	U	ND< 5.88	U	ND< 5.37	U	ND< 7.04	U	ND< 5.66	U	ND< 5.56	U	ND< 5.21	U	ND< 5.52	U	ND< 4.84	U	ND< 6.70	U	ND< 4.82	U
T-Butylbenzene	100000	ND< 2.95	U	ND< 3.33	U	ND< 2.35	U	ND< 2.15	U	ND< 2.82	U	ND< 2.26	U	ND< 2.23	U	ND< 2.09	U	ND< 2.21	U	ND< 1.94	U	ND< 2.68	U	ND< 1.93	U
Tetrachloroethylene (PCE)	19000	ND< 2.95	U	ND< 3.33	U	ND< 2.35	U	ND< 2.15	U	ND< 2.82	U	ND< 2.26	U	ND< 2.23	U	ND< 2.09	U	ND< 2.21	U	ND< 1.94	U	ND< 2.68	U	ND< 1.93	U
Toluene	100000	ND< 2.95	U	ND< 3.33	U	ND< 2.35	U	ND< 2.15	U	ND< 2.82	U	ND< 2.26	U	2.12	J	ND< 2.09	U	1.88	J	ND< 1.94	U	ND< 2.68	U	ND< 1.93	U
Trans-1,2-Dichloroethene	100000	ND< 2.95	U	ND< 3.33	U	ND< 2.35	U	ND< 2.15	U	ND< 2.82	U	ND< 2.26	U	ND< 2.23	U	ND< 2.09	U	ND< 2.21	U	ND< 1.94	U	ND< 2.68	U	ND< 1.93	U
Trans-1,3-Dichloropropene		ND< 2.95	U	ND< 3.33	U	ND< 2.35	U	ND< 2.15	U	ND< 2.82	U	ND< 2.26	U	ND< 2.23	U	ND< 2.09	U	ND< 2.21	U	ND< 1.94	U	ND< 2.68	U	ND< 1.93	U
Trichloroethylene (TCE)	21000	ND< 2.95	U	ND< 3.33	U	ND< 2.35	U	ND< 2.15	U	ND< 2.82	U	ND< 2.26	U	ND< 2.23	U	ND< 2.09	U	ND< 2.21	U	ND< 1.94	U	ND< 2.68	U	ND< 1.93	U
Trichlorofluoromethane		ND< 2.95	U	ND< 3.33	U	ND< 2.35	U	ND< 2.15	U	ND< 2.82	U	ND< 2.26	U	ND< 2.23	U	ND< 2.09	U	ND< 2.21	U	ND< 1.94	U	ND< 2.68	U	ND< 1.93	U
Vinyl Chloride	900	ND< 2.95	U	ND< 3.33	U	ND< 2.35	U	ND< 2.15	U	ND< 2.82	U	ND< 2.26	U	ND< 2.23	U	ND< 2.09	U	ND< 2.21	U	ND< 1.94	U	ND< 2.68	U	ND< 1.93	U

NOTES:

1. Soil sample analytical results are compared to the New York State Department of Environmental Conservation (NYSDEC) Title 6 of the official compilation of New York Codes, Rules, and Regulations (NYCRR) Part 375 Restricted Residential Soil Cleanup Objectives (RRSCOs).
2. RRSCO exceedances are in bold and highlighted yellow.
3. ND = Not Detected
4. Results shown as "ND" with Reporting Limits exceeding RRSCOs are in bold.
5. VOCs = Volatile Organic Compounds
6. µg/kg = micrograms per kilogram.
7. Qualifier (Q) definitions are provided in the official lab reports.

TABLE 9A: Volatile Organic Compounds (VOCs) in Soil
Surface soil samples collected outside of AOCs
Soil Sample Results (non-QA/QC)
Hudson River Psychiatric Center - North BCP Site, Poughkeepsie, NY
PVE Sheffler File #560909

	Date Sampled	11/25/2014		12/15/2014		11/25/2014		12/15/2014		11/25/2014		12/15/2014	
	Location	SS-25		SS-25		SS-26		SS-26		SS-27		SS-27	
	Sample ID	SS-25 (0-2")		SS-25 2-24"		SS-26 (0-2")		SS-26 2-24"		SS-27 (0-2")		SS-27 2-24"	
Analyte	RRSCOs	Result	Q	Result	Q	Result	Q	Result	Q	Result	Q	Result	Q
VOCs (µg/kg)													
1,1,1-Trichloroethane	100000	ND< 2.78	U	ND< 2.12	U	ND< 2.21	U	ND< 2.46	U	ND< 2.84	U	ND< 2.50	U
1,1,2,2-Tetrachloroethane		ND< 2.78	U	ND< 2.12	U	ND< 2.21	U	ND< 2.46	U	ND< 2.84	U	ND< 2.50	U
1,1,2-Trichloro-1,2,2-Trifluoroethane		ND< 2.78	U	ND< 2.12	U	ND< 2.21	U	ND< 2.46	U	ND< 2.84	U	ND< 2.50	U
1,1,2-Trichloroethane		ND< 2.78	U	ND< 2.12	U	ND< 2.21	U	ND< 2.46	U	ND< 2.84	U	ND< 2.50	U
1,1-Dichloroethane	26000	ND< 2.78	U	ND< 2.12	U	ND< 2.21	U	ND< 2.46	U	ND< 2.84	U	ND< 2.50	U
1,1-Dichloroethene	100000	ND< 2.78	U	ND< 2.12	U	ND< 2.21	U	ND< 2.46	U	ND< 2.84	U	ND< 2.50	U
1,2,3-Trichlorobenzene		ND< 6.95	U	ND< 5.29	U	ND< 5.52	U	ND< 6.14	U	ND< 7.09	U	ND< 6.25	U
1,2,4-Trichlorobenzene		ND< 6.95	U	ND< 5.29	U	ND< 5.52	U	ND< 6.14	U	ND< 7.09	U	ND< 6.25	U
1,2,4-Trimethylbenzene	52000	ND< 2.78	U	ND< 2.12	U	ND< 2.21	U	ND< 2.46	U	ND< 2.84	U	ND< 2.50	U
1,2-Dibromo-3-Chloropropane		ND< 13.9	U	ND< 10.6	U	ND< 11.0	U	ND< 12.3	U	ND< 14.2	U	ND< 12.5	U
1,2-Dibromoethane (Ethylene Dibromide)		ND< 2.78	U	ND< 2.12	U	ND< 2.21	U	ND< 2.46	U	ND< 2.84	U	ND< 2.50	U
1,2-Dichlorobenzene	100000	ND< 2.78	U	ND< 2.12	U	ND< 2.21	U	ND< 2.46	U	ND< 2.84	U	ND< 2.50	U
1,2-Dichloroethane	3100	ND< 2.78	U	ND< 2.12	U	ND< 2.21	U	ND< 2.46	U	ND< 2.84	U	ND< 2.50	U
1,2-Dichloropropane		ND< 2.78	U	ND< 2.12	U	ND< 2.21	U	ND< 2.46	U	ND< 2.84	U	ND< 2.50	U
1,3,5-Trimethylbenzene (Mesitylene)	52000	ND< 2.78	U	ND< 2.12	U	ND< 2.21	U	ND< 2.46	U	ND< 2.84	U	ND< 2.50	U
1,3-Dichlorobenzene	49000	ND< 2.78	U	ND< 2.12	U	ND< 2.21	U	ND< 2.46	U	ND< 2.84	U	ND< 2.50	U
1,4-Dichlorobenzene	13000	ND< 2.78	U	ND< 2.12	U	ND< 2.21	U	ND< 2.46	U	ND< 2.84	U	ND< 2.50	U
1,4-Dioxane (P-Dioxane)	13000	ND< 27.8	U	ND< 21.2	U	ND< 22.1	U	ND< 24.6	U	ND< 28.4	U	ND< 25.0	U
2-Hexanone		ND< 6.95	U	ND< 5.29	U	ND< 5.52	U	ND< 6.14	U	ND< 7.09	U	ND< 6.25	U
Acetone	100000	ND< 13.9	U	ND< 10.6	U	ND< 11.0	U	ND< 12.3	U	ND< 14.2	U	ND< 12.5	U
Benzene	4800	ND< 2.78	U	ND< 2.12	U	ND< 2.21	U	ND< 2.46	U	ND< 2.84	U	ND< 2.50	U
Bromochloromethane		ND< 6.95	U	ND< 5.29	U	ND< 5.52	U	ND< 6.14	U	ND< 7.09	U	ND< 6.25	U
Bromodichloromethane		ND< 2.78	U	ND< 2.12	U	ND< 2.21	U	ND< 2.46	U	ND< 2.84	U	ND< 2.50	U
Bromoform		ND< 6.95	U	ND< 5.29	U	ND< 5.52	U	ND< 6.14	U	ND< 7.09	U	ND< 6.25	U
Bromomethane		ND< 2.78	U	ND< 2.12	U	ND< 2.21	U	ND< 2.46	U	ND< 2.84	U	ND< 2.50	U
Carbon Disulfide		ND< 2.78	U	ND< 2.12	U	ND< 2.21	U	ND< 2.46	U	ND< 2.84	U	ND< 2.50	U
Carbon Tetrachloride	2400	ND< 2.78	U	ND< 2.12	U	ND< 2.21	U	ND< 2.46	U	ND< 2.84	U	ND< 2.50	U
Chlorobenzene	100000	ND< 2.78	U	ND< 2.12	U	ND< 2.21	U	ND< 2.46	U	ND< 2.84	U	ND< 2.50	U
Chloroethane		ND< 2.78	U	ND< 2.12	U	ND< 2.21	U	ND< 2.46	U	ND< 2.84	U	ND< 2.50	U
Chloroform	49000	ND< 2.78	U	ND< 2.12	U	ND< 2.21	U	ND< 2.46	U	ND< 2.84	U	ND< 2.50	U
Chloromethane		ND< 2.78	U	ND< 2.12	U	ND< 2.21	U	ND< 2.46	U	ND< 2.84	U	ND< 2.50	U
Cis-1,2-Dichloroethylene	100000	ND< 2.78	U	ND< 2.12	U	ND< 2.21	U	ND< 2.46	U	ND< 2.84	U	ND< 2.50	U
Cis-1,3-Dichloropropene		ND< 2.78	U	ND< 2.12	U	ND< 2.21	U	ND< 2.46	U	ND< 2.84	U	ND< 2.50	U
Cyclohexane		ND< 13.9	U	ND< 10.6	U	ND< 11.0	U	ND< 12.3	U	ND< 14.2	U	ND< 12.5	U
Cymene		ND< 2.78	U	ND< 2.12	U	ND< 2.21	U	ND< 2.46	U	ND< 2.84	U	ND< 2.50	U
Dibromochloromethane		ND< 2.78	U	ND< 2.12	U	ND< 2.21	U	ND< 2.46	U	ND< 2.84	U	ND< 2.50	U
Dichlorodifluoromethane		ND< 2.78	U	ND< 2.12	U	ND< 2.21	U	ND< 2.46	U	ND< 2.84	U	ND< 2.50	U
Ethylbenzene	41000	ND< 2.78	U	ND< 2.12	U	ND< 2.21	U	ND< 2.46	U	ND< 2.84	U	ND< 2.50	U
Isopropylbenzene (Cumene)		ND< 2.78	U	ND< 2.12	U	ND< 2.21	U	ND< 2.46	U	ND< 2.84	U	ND< 2.50	U
Methyl Acetate		ND< 2.78	U	ND< 2.12	U	ND< 2.21	U	ND< 2.46	U	ND< 2.84	U	ND< 2.50	U
Methyl Ethyl Ketone (2-Butanone)	100000	ND< 13.9	U	ND< 10.6	U	ND< 11.0	U	ND< 12.3	U	ND< 14.2	U	ND< 12.5	U
Methyl Isobutyl Ketone (4-Methyl-2-Pentanone)		ND< 6.95	U	ND< 5.29	U	ND< 5.52	U	ND< 6.14	U	ND< 7.09	U	ND< 6.25	U
Methyl Tert-Butyl Ether (MTBE)	100000	ND< 2.78	U	ND< 2.12	U	ND< 2.21	U	ND< 2.46	U	ND< 2.84	U	ND< 2.50	U
Methylcyclohexane		ND< 2.78	U	ND< 2.12	U	ND< 2.21	U	ND< 2.46	U	ND< 2.84	U	ND< 2.50	U
Methylene Chloride	100000	ND< 6.95	U	ND< 5.29	U	ND< 5.52	U	ND< 6.14	U	ND< 7.09	U	ND< 6.25	U
M-P-Xylene		ND< 2.78	U	ND< 2.12	U	ND< 2.21	U	ND< 2.46	U	ND< 2.84	U	ND< 2.50	U
Naphthalene	100000	ND< 6.95	U	ND< 5.29	U	ND< 5.52	U	ND< 6.14	U	ND< 7.09	U	ND< 6.25	U
N-Butylbenzene	100000	ND< 2.78	U	ND< 2.12	U	ND< 2.21	U	ND< 2.46	U	ND< 2.84	U	ND< 2.50	U
N-Propylbenzene	100000	ND< 2.78	U	ND< 2.12	U	ND< 2.21	U	ND< 2.46	U	ND< 2.84	U	ND< 2.50	U
O-Xylene (1,2-Dimethylbenzene)		ND< 2.78	U	ND< 2.12	U	ND< 2.21	U	ND< 2.46	U	ND< 2.84	U	ND< 2.50	U
Sec-Butylbenzene	100000	ND< 2.78	U	ND< 2.12	U	ND< 2.21	U	ND< 2.46	U	ND< 2.84	U	ND< 2.50	U
Styrene		ND< 6.95	U	ND< 5.29	U	ND< 5.52	U	ND< 6.14	U	ND< 7.09	U	ND< 6.25	U
T-Butylbenzene	100000	ND< 2.78	U	ND< 2.12	U	ND< 2.21	U	ND< 2.46	U	ND< 2.84	U	ND< 2.50	U
Tetrachloroethylene (PCE)	19000	ND< 2.78	U	ND< 2.12	U	ND< 2.21	U	ND< 2.46	U	ND< 2.84	U	ND< 2.50	U
Toluene	100000	ND< 2.78	U	ND< 2.12	U	ND< 2.21	U	ND< 2.46	U	ND< 2.84	U	ND< 2.50	U
Trans-1,2-Dichloroethene	100000	ND< 2.78	U	ND< 2.12	U	ND< 2.21	U	ND< 2.46	U	ND< 2.84	U	ND< 2.50	U
Trans-1,3-Dichloropropene		ND< 2.78	U	ND< 2.12	U	ND< 2.21	U	ND< 2.46	U	ND< 2.84	U	ND< 2.50	U
Trichloroethylene (TCE)	21000	ND< 2.78	U	ND< 2.12	U	ND< 2.21	U	ND< 2.46	U	ND< 2.84	U	ND< 2.50	U
Trichlorofluoromethane		ND< 2.78	U	ND< 2.12	U	ND< 2.21	U	ND< 2.46	U	ND< 2.84	U	ND< 2.50	U
Vinyl Chloride	900	ND< 2.78	U	ND< 2.12	U	ND< 2.21	U	ND< 2.46	U	ND< 2.84	U	ND< 2.50	U

NOTES:

1. Soil sample analytical results are compared to the New York State Department of Environmental Conservation (NYSDEC) Title 6 of the official compilation of New York Codes, Rules, and Regulations (NYCRR) Part 375 Restricted Residential Soil Cleanup Objectives (RRSCOs).
2. RRSCO exceedances are in bold and highlighted yellow.
3. ND = Not Detected
4. Results shown as "ND" with Reporting Limits exceeding RRSCOs are in bold.
5. VOCs = Volatile Organic Compounds
6. µg/kg = micrograms per kilogram.
7. Qualifier (Q) definitions are provided in the official lab reports.

Table 9B – SVOCs in Soil – Surface Samples Outside AOCs

TABLE 9B: Semi-Volatile Organic Compounds (SVOCs) in Soil
Surface soil samples collected outside of AOCs
Soil Sample Results (non-QA/QC)
Hudson River Psychiatric Center - North BCP Site, Poughkeepsie, NY
PVE Sheffler File #560909

	Date Sampled	5/5/2014		5/5/2014		5/5/2014		5/5/2014		5/5/2014		5/5/2014		5/5/2014		5/5/2014		5/5/2014		5/5/2014		5/15/2014		5/15/2014		5/2/2014		5/2/2014	
	Location	SS-1		SS-1		SS-2		SS-2		SS-3		SS-3		SS-4		SS-4		SS-5		SS-5		SS-6B		SS-6B		SS-7		SS-7	
	Sample ID	SS-1 0-2"		SS-1 12-18"		SS-2 0-2"		SS-2 12-16"		SS-3 0-2"		SS-3 12-20"		SS-4 0-2"		SS-4 12-17"		SS-5 0-2"		SS-5 12-20"		SS-6B 0-2"		SS-6B 12-24"		SS-7 0-2"		SS-7 12-20"	
Analyte	RRSCOs	Result	Q	Result	Q	Result	Q	Result	Q	Result	Q	Result	Q	Result	Q	Result	Q	Result	Q	Result	Q	Result	Q	Result	Q	Result	Q	Result	Q
SVOCs (µg/kg)																													
1,2,4,5-Tetrachlorobenzene		ND< 370	U	ND< 333	U	ND< 356	U	ND< 322	U	ND< 390	U	ND< 333	U	ND< 397	U	ND< 321	U	ND< 337	U	ND< 334	U	ND< 367	U	ND< 319	U	ND< 343	U	ND< 334	U
1,2,4-Trichlorobenzene		ND< 370	U	ND< 333	U	ND< 356	U	ND< 322	U	ND< 390	U	ND< 333	U	ND< 397	U	ND< 321	U	ND< 337	U	ND< 334	U	ND< 367	U	ND< 319	U	ND< 343	U	ND< 334	U
1,2-Dichlorobenzene	100000	ND< 370	U	ND< 333	U	ND< 356	U	ND< 322	U	ND< 390	U	ND< 333	U	ND< 397	U	ND< 321	U	ND< 337	U	ND< 334	U	ND< 367	U	ND< 319	U	ND< 343	U	ND< 334	U
1,3-Dichlorobenzene	49000	ND< 370	U	ND< 333	U	ND< 356	U	ND< 322	U	ND< 390	U	ND< 333	U	ND< 397	U	ND< 321	U	ND< 337	U	ND< 334	U	ND< 367	U	ND< 319	U	ND< 343	U	ND< 334	U
1,4-Dichlorobenzene	13000	ND< 370	U	ND< 333	U	ND< 356	U	ND< 322	U	ND< 390	U	ND< 333	U	ND< 397	U	ND< 321	U	ND< 337	U	ND< 334	U	ND< 367	U	ND< 319	U	ND< 343	U	ND< 334	U
2,2-Oxybis(2-Chloropropane)		ND< 370	U	ND< 333	U	ND< 356	U	ND< 322	U	ND< 390	U	ND< 333	U	ND< 397	U	ND< 321	U	ND< 337	U	ND< 334	U	ND< 367	U	ND< 319	U	ND< 343	U	ND< 334	U
2,3,4,6-Tetrachlorophenol		ND< 370	U	ND< 333	U	ND< 356	U	ND< 322	U	ND< 390	U	ND< 333	U	ND< 397	U	ND< 321	U	ND< 337	U	ND< 334	U	ND< 367	U	ND< 319	U	ND< 343	U	ND< 334	U
2,4,5-Trichlorophenol		ND< 741	U	ND< 666	U	ND< 712	U	ND< 644	U	ND< 780	U	ND< 667	U	ND< 795	U	ND< 642	U	ND< 675	U	ND< 667	U	ND< 734	U	ND< 638	U	ND< 687	U	ND< 667	U
2,4,6-Trichlorophenol		ND< 370	U	ND< 333	U	ND< 356	U	ND< 322	U	ND< 390	U	ND< 333	U	ND< 397	U	ND< 321	U	ND< 337	U	ND< 334	U	ND< 367	U	ND< 319	U	ND< 343	U	ND< 334	U
2,4-Dichlorophenol		ND< 370	U	ND< 333	U	ND< 356	U	ND< 322	U	ND< 390	U	ND< 333	U	ND< 397	U	ND< 321	U	ND< 337	U	ND< 334	U	ND< 367	U	ND< 319	U	ND< 343	U	ND< 334	U
2,4-Dimethylphenol		ND< 370	U	ND< 333	U	ND< 356	U	ND< 322	U	ND< 390	U	ND< 333	U	ND< 397	U	ND< 321	U	ND< 337	U	ND< 334	U	ND< 367	U	ND< 319	U	ND< 343	U	ND< 334	U
2,4-Dinitrophenol		ND< 741	U	ND< 666	U	ND< 712	U	ND< 644	U	ND< 780	U	ND< 667	U	ND< 795	U	ND< 642	U	ND< 675	U	ND< 667	U	ND< 734	U	ND< 638	U	ND< 687	U	ND< 667	U
2,4-Dinitrotoluene		ND< 370	U	ND< 333	U	ND< 356	U	ND< 322	U	ND< 390	U	ND< 333	U	ND< 397	U	ND< 321	U	ND< 337	U	ND< 334	U	ND< 367	U	ND< 319	U	ND< 343	U	ND< 334	U
2,6-Dinitrotoluene		ND< 370	U	ND< 333	U	ND< 356	U	ND< 322	U	ND< 390	U	ND< 333	U	ND< 397	U	ND< 321	U	ND< 337	U	ND< 334	U	ND< 367	U	ND< 319	U	ND< 343	U	ND< 334	U
2-Chloronaphthalene		ND< 370	U	ND< 333	U	ND< 356	U	ND< 322	U	ND< 390	U	ND< 333	U	ND< 397	U	ND< 321	U	ND< 337	U	ND< 334	U	ND< 367	U	ND< 319	U	ND< 343	U	ND< 334	U
2-Chlorophenol		ND< 370	U	ND< 333	U	ND< 356	U	ND< 322	U	ND< 390	U	ND< 333	U	ND< 397	U	ND< 321	U	ND< 337	U	ND< 334	U	ND< 367	U	ND< 319	U	ND< 343	U	ND< 334	U
2-Methylnaphthalene		ND< 370	U	ND< 333	U	ND< 356	U	ND< 322	U	ND< 390	U	ND< 333	U	ND< 397	U	ND< 321	U	ND< 337	U	ND< 334	U	ND< 367	U	ND< 319	U	ND< 343	U	ND< 334	U
2-Methylphenol (O-Cresol)	100000	ND< 370	U	ND< 333	U	ND< 356	U	ND< 322	U	ND< 390	U	ND< 333	U	ND< 397	U	ND< 321	U	ND< 337	U	ND< 334	U	ND< 367	U	ND< 319	U	ND< 343	U	ND< 334	U
2-Nitroaniline		ND< 741	U	ND< 666	U	ND< 712	U	ND< 644	U	ND< 780	U	ND< 667	U	ND< 795	U	ND< 642	U	ND< 675	U	ND< 667	U	ND< 734	U	ND< 638	U	ND< 687	U	ND< 667	U
2-Nitrophenol		ND< 370	U	ND< 333	U	ND< 356	U	ND< 322	U	ND< 390	U	ND< 333	U	ND< 397	U	ND< 321	U	ND< 337	U	ND< 334	U	ND< 367	U	ND< 319	U	ND< 343	U	ND< 334	U
3,3'-Dichlorobenzidine		ND< 370	U	ND< 333	U	ND< 356	U	ND< 322	U	ND< 390	U	ND< 333	U	ND< 397	U	ND< 321	U	ND< 337	U	ND< 334	U	ND< 367	U	ND< 319	U	ND< 343	U	ND< 334	U
3-Methylphenol	100000	ND< 370	U	ND< 333	U	ND< 356	U	ND< 322	U	ND< 390	U	ND< 333	U	ND< 397	U	ND< 321	U	ND< 337	U	ND< 334	U	ND< 367	U	ND< 319	U	ND< 343	U	ND< 334	U
3-Nitroaniline		ND< 741	U	ND< 666	U	ND< 712	U	ND< 644	U	ND< 780	U	ND< 667	U	ND< 795	U	ND< 642	U	ND< 675	U	ND< 667	U	ND< 734	U	ND< 638	U	ND< 687	U	ND< 667	U
4,6-Dinitro-2-Methylphenol		ND< 741	U	ND< 666	U	ND< 712	U	ND< 644	U	ND< 780	U	ND< 667	U	ND< 795	U	ND< 642	U	ND< 675	U	ND< 667	U	ND< 734	U	ND< 638	U	ND< 687	U	ND< 667	U
4-Bromophenyl Phenyl Ether		ND< 370	U	ND< 333	U	ND< 356	U	ND< 322	U	ND< 390	U	ND< 333	U	ND< 397	U	ND< 321	U	ND< 337	U	ND< 334	U	ND< 367	U	ND< 319	U	ND< 343	U	ND< 334	U
4-Chloro-3-Methylphenol		ND< 370	U	ND< 333	U	ND< 356	U	ND< 322	U	ND< 390	U	ND< 333	U	ND< 397	U	ND< 321	U	ND< 337	U	ND< 334	U	ND< 367	U	ND< 319	U	ND< 343	U	ND< 334	U
4-Chloroaniline		ND< 370	U	ND< 333	U	ND< 356	U	ND< 322	U	ND< 390	U	ND< 333	U	ND< 397	U	ND< 321	U	ND< 337	U	ND< 334	U	ND< 367	U	ND< 319	U	ND< 343	U	ND< 334	U
4-Chlorophenyl Phenyl Ether		ND< 370	U	ND< 333	U	ND< 356	U	ND< 322	U	ND< 390	U	ND< 333	U	ND< 397	U	ND< 321	U	ND< 337	U	ND< 334	U	ND< 367	U	ND< 319	U	ND< 343	U	ND< 334	U
4-Nitroaniline		ND< 741	U	ND< 666	U	ND< 712	U	ND< 644	U	ND< 780	U	ND< 667	U	ND< 795	U	ND< 642	U	ND< 675	U	ND< 667	U	ND< 734	U	ND< 638	U	ND< 687	U	ND< 667	U
4-Nitrophenol		ND< 741	U	ND< 666	U	ND< 712	U	ND< 644	U	ND< 780	U	ND< 667	U	ND< 795	U	ND< 642	U	ND< 675	U	ND< 667	U	ND< 734	U	ND< 638	U	ND< 687	U	ND< 667	U
Acenaphthene	100000	ND< 370	U	320	J	ND< 356	U	ND< 322	U	ND< 390	U	ND< 333	U	ND< 397	U	ND< 321	U	ND< 337	U	ND< 334	U	ND< 367	U	ND< 319	U	ND< 343	U	ND< 334	U
Acenaphthylene	100000	ND< 370	U	ND< 333	U	ND< 356	U	ND< 322	U	ND< 390	U	ND< 333	U	ND< 397	U	ND< 321	U	237	J	848		ND< 367	U	ND< 319	U	ND< 343	U	ND< 334	U
Acetophenone		ND< 370	U	ND< 333	U	ND< 356	U	ND< 322	U	ND< 390	U	ND< 333	U	ND< 397	U	ND< 321	U	ND< 337	U	ND< 334	U	ND< 367	U	ND< 319	U	ND< 343	U	ND< 334	U
Anthracene	100000	290	J	956		ND< 356	U	ND< 322	U	ND< 390	U	ND< 333	U	199	J	ND< 321	U	219	J	ND< 334	U	ND< 367	U	ND< 319	U	ND< 343	U	ND< 334	U
Atrazine		ND< 370	U	ND< 333	U	ND< 356	U	ND< 322	U	ND< 390	U	ND< 333	U	ND< 397	U	ND< 321	U	ND< 337	U	ND< 334	U	ND< 367	U	ND< 319	U	ND< 343	U	ND< 334	U
Benzaldehyde		ND< 370	U	ND< 333	U	ND< 356	U	ND< 322	U	ND< 390	U	ND< 333	U	ND< 397	U	ND< 321	U	ND< 337	U	ND< 334	U	ND< 367	U	ND< 319	U	ND< 343	U	ND< 334	U
Benzo(A)Anthracene	**1000**	800		**2150**		474		ND< 322	U	333	J	167	J	419		ND< 321	U	458		611		ND< 367	U	ND< 319	U	ND< 343	U	ND< 334	U
Benzo(A)Pyrene	**1000**	713		**2110**		514		ND< 322	U	345	J	168	J	440		ND< 321	U	488		412		ND< 367	U	ND< 319	U	ND< 343	U	ND< 334	U
Benzo(B)Fluoranthene	**1000**	658		**1860**		443		ND< 322	U	296	J	ND< 333	U	389	J	ND< 321	U	502		479		ND< 367	U	ND< 319	U	ND< 343	U	ND< 334	U
Benzo(G,H,I)Perylene	100000	481		1280		370		ND< 322	U	259	J	ND< 333	U	290	J	ND< 321	U	295	J	314	J	ND< 367	U	ND< 319	U	ND< 343	U	ND< 334	U
Benzo(K)Fluoranthene	3900	569		1540		437		ND< 322	U	313	J	ND< 333	U	324	J	ND< 321	U	278	J	496		ND< 367	U	ND< 319	U	ND< 343	U	ND< 334	U
Benzyl Butyl Phthalate		ND< 370	U	ND< 333	U	ND< 356	U	ND< 322	U	ND< 390	U	ND< 333	U	ND< 397	U	ND< 321	U	ND< 337	U	ND< 334	U	ND< 367	U	ND< 319	U	ND< 343	U	ND< 334	U
Biphenyl (Diphenyl)		ND< 370	U	ND< 333	U	ND< 356	U	ND< 322	U	ND< 390	U	ND< 333	U	ND< 397	U	ND< 321	U	ND< 337	U	ND< 334	U	ND< 367	U	ND< 319	U	ND< 343	U	ND< 334	U
Bis(2-Chloroethoxy) Methane		ND< 370	U	ND< 333	U	ND< 356	U	ND< 322	U	ND< 390	U	ND< 333	U	ND< 397	U	ND< 321	U	ND< 337	U	ND< 334	U	ND< 367	U	ND< 319	U	ND< 343	U	ND< 334	U
Bis(2-Chloroethyl) Ether (2-Chloroethyl Ether)		ND< 370	U	ND< 333	U	ND< 356	U	ND< 322	U	ND< 390	U	ND< 333	U	ND< 397	U	ND< 321	U	ND< 337	U	ND< 334	U	ND< 367	U	ND< 319	U	ND< 343	U	ND< 334	U
Bis(2-Ethylhexyl) Phthalate		ND< 370	U	ND< 333	U	ND< 356	U	ND< 322	U	ND< 390	U	ND< 333	U	ND< 397	U	ND< 321	U	ND< 337	U	ND< 334	U	ND< 367	U	ND< 319	U	ND< 343	U	ND< 334	U
Caprolactam		ND< 370	U	ND< 333	U	ND< 356	U	ND< 322	U	ND< 390	U	ND< 333	U	ND< 397	U	ND< 321	U	ND< 337	U	ND< 334	U	ND< 367	U	ND< 319	U	ND< 343	U	ND< 334	U
Carbazole		ND< 370	U	357		ND< 356	U	ND< 322	U	ND< 390	U	ND< 333	U	ND< 397	U	ND< 321	U	ND< 337	U	ND< 334	U	ND< 367	U	ND< 319	U	ND< 343	U	ND< 334	U
Chrysene	3900	796		2310		557		ND< 322	U	439		198	J	521		ND< 321	U	630		722		ND< 367	U	ND< 319	U	ND< 343	U	ND< 334	U
Dibenz(A,H)Anthracene	**330**	**ND< 370**	**U**	**414**		**ND< 356**	**U**	ND< 322	U	**ND< 390**	**U**	**ND< 333**	**U**	**ND< 397**	**U**	ND< 321	U	**ND< 337**	**U**	**ND< 334**	**U**	**ND< 367**	**U**	ND< 319	U	**ND< 343**	**U**	**ND< 334**	**U**
Dibenzofuran	59000	ND< 370	U	ND< 333	U	ND< 356	U	ND< 322	U	ND< 390	U	ND< 333	U	ND< 397	U	ND< 321	U	ND< 337	U	ND< 334	U	ND< 367	U	ND< 319	U	ND< 343	U	ND< 334	U
Diethyl Phthalate		ND< 370	U	ND< 333	U	ND< 356	U	ND< 322	U	ND< 390	U	ND< 333	U	ND< 397	U	ND< 321	U	ND< 337	U	ND< 334	U	ND< 367	U	ND< 319	U	ND< 343	U	ND< 334	U
Dimethyl Phthalate		ND< 741	U	ND< 666	U	ND< 712	U	ND< 644	U	ND< 780	U	ND< 667	U	ND< 795	U	ND< 642	U	ND< 675	U	ND< 667	U	ND< 734	U	ND< 638	U	ND< 687	U	ND< 667	U
Di-N-Butyl Phthalate		ND< 370	U	ND< 333	U	ND< 356	U	ND< 322	U	ND< 390	U	ND< 333	U	ND< 397	U	ND< 321	U	ND< 337	U	ND< 334	U	ND< 367	U	ND< 319	U	ND< 343	U	ND< 334	U
Di-N-Octylphthalate		ND< 370	U	ND< 333	U	ND< 356	U	ND< 322	U	ND< 390	U	ND< 333	U	ND< 397	U	ND< 321	U	ND< 337	U	ND< 334	U	ND< 367	U	ND< 319	U	ND< 343	U	ND< 334	U
Fluoranthene	100000	1690		4540		1140		243	J	666		362		891		ND< 321	U	906		415		ND< 367	U	ND< 319	U	ND< 343	U	ND< 334	U
Fluorene	100000	ND< 370	U	288	J	ND< 356	U	ND< 322	U	ND< 390	U	ND< 333	U	ND< 397	U	ND< 321	U	ND< 337	U	ND< 334	U	ND< 367	U	ND< 319	U	ND< 343	U	ND< 334	U
Hexachlorobenzene	**1200**	ND< 370	U	ND< 333	U	ND< 356	U	ND< 322	U	ND< 390	U	ND< 333	U	ND< 397	U	ND< 321	U	ND< 337	U	ND< 334	U	ND< 367	U	ND< 319	U	ND< 343	U	ND< 334	U
Hexachlorobutadiene		ND< 370	U	ND< 333	U	ND< 356	U	ND< 322	U	ND< 390	U	ND< 333	U	ND< 397	U	ND< 321	U	ND< 337	U	ND< 334	U	ND< 367	U	ND< 319	U	ND< 343	U	ND< 334	U
Hexachlorocyclopentadiene		ND< 370	U	ND< 333	U	ND< 356	U	ND< 322	U	ND< 390	U	ND< 333	U	ND< 397	U	ND< 321	U	ND< 337	U	ND< 334	U	ND< 367	U	ND< 319	U	ND< 343	U	ND< 334	U
Hexachloroethane		ND< 370	U	ND< 333	U	ND< 356	U	ND< 322	U	ND< 390	U	ND< 333	U	ND< 397	U	ND< 321	U	ND< 337	U	ND< 334	U	ND< 367	U	ND< 319	U	ND< 343	U	ND< 334	U
Indeno(1,2,3-C,D)Pyrene	**500**	**552**		**1590**		368		ND< 322	U	249	J	ND< 333	U	295	J	ND< 321	U	332	J	352		ND< 367	U	ND< 319	U	ND< 343	U	ND< 334	U
Isophorone		ND< 370	U	ND< 333	U	ND< 356	U	ND< 322	U	ND< 390	U	ND< 333	U	ND< 397	U	ND< 321	U	ND< 337	U	ND< 334	U	ND< 367	U	ND< 319	U	ND< 343	U	ND< 334	U
Naphthalene	100000	ND< 370	U	ND< 333	U	ND< 356	U	ND< 322	U	ND< 390	U	ND< 333	U	ND< 397	U	ND< 321	U	ND< 337	U	ND< 334	U	ND< 367	U	ND< 319	U	ND< 343	U	ND< 334	U
Nitrobenzene		ND< 370	U	ND< 333	U	ND< 356	U	ND< 322	U	ND< 390	U	ND< 333	U	ND< 397	U	ND< 321	U	ND< 337	U	ND< 334	U	ND< 367	U	ND< 319	U	ND< 343	U	ND< 334	U
N-Nitrosodi-N-Propylamine		ND< 370	U	ND< 333	U	ND< 356	U	ND< 322	U	ND< 390	U	ND< 333	U	ND< 397	U	ND< 321	U	ND< 337	U	ND< 334	U	ND< 367	U	ND< 319	U	ND< 343	U	ND< 334	U
N-Nitrosodiphenylamine		ND< 370	U	ND< 333	U	ND< 356	U	ND< 322	U	ND< 390	U	ND< 333	U	ND< 397	U	ND< 321	U	ND< 337	U	ND< 334	U	ND< 367	U	ND< 319	U	ND< 343	U	ND< 334	U
Pentachlorophenol	6700	ND< 741	U	ND< 666	U	ND< 712	U	ND< 644	U	ND< 780	U	ND< 667	U	ND< 795	U	ND< 642	U	ND< 675	U	ND< 667	U	ND< 734	U	ND< 638	U	ND< 687	U	ND< 667	U
Phenanthrene	100000	932		2720		755		ND< 322	U	301	J	202	J	405		ND< 321	U	421		192	J	ND< 367	U	ND< 319	U	ND< 343	U	ND< 334	U
Phenol	100000	ND< 370	U	ND< 333	U	ND< 356	U	ND< 322	U	ND< 390	U	ND< 333	U	ND< 397	U	ND< 321	U	ND< 337	U	ND< 334	U	ND< 367	U	ND< 319	U	ND< 343	U	ND< 334	U
Pyrene	100000	1360		3810		879		202	J	625		340		845		ND< 321	U	920		1020		ND< 367	U	ND< 319	U	ND< 343	U	ND< 334	U

NOTES:

1. Soil sample analytical results are compared to the New York State Department of Environmental Conservation (NYSDEC) Title 6 of the official compilation of New York Codes, Rules, and Regulations (NYCRR) Part 375 Restricted Residential Soil Cleanup Objectives (RRSCOs).
2. RRSCO exceedances are in bold and highlighted yellow.
3. ND = Not Detected
4. Results shown as "ND" with Reporting Limits exceeding RRSCOs are in bold.
5. SVOCs = Semi-Volatile Organic Compounds
6. µg/kg = micrograms per kilogram.
7. Qualifier (Q) definitions are provided in the official lab reports.

TABLE 9B: Semi-Volatile Organic Compounds (SVOCs) in Soil
Surface soil samples collected outside of AOCs
Soil Sample Results (non-QA/QC)
Hudson River Psychiatric Center - North BCP Site, Poughkeepsie, NY
PVE Sheffler File #560909

	Date Sampled	5/2/2014		5/2/2014		5/2/2014		5/2/2014		5/2/2014		5/2/2014		5/2/2014		5/2/2014		5/2/2014		5/2/2014		5/2/2014		5/2/2014		5/1/2014	
	Location	SS-8		SS-8		SS-9		SS-9		SS-10		SS-10		SS-11		SS-11		SS-12		SS-13		SS-13		SS-14		SS-14		SS-15	
	Sample ID	SS-8 0-2"		SS-8 12-22"		SS-9 0-2"		SS-9 12-15"		SS-10 0-2"		SS-10 12-20"		SS-11 0-2"		SS-11 12-19"		SS-12 0-2"		SS-13 0-2"		SS-13 12-20"		SS-14 0-2"		SS-14 12-20"		SS-15 0-2"	
Analyte	RRSCOs	Result	Q	Result	Q	Result	Q	Result	Q	Result	Q	Result	Q	Result	Q	Result	Q	Result	Q	Result	Q	Result	Q	Result	Q	Result	Q	Result	Q
SVOCs (µg/kg)																													
1,2,4,5-Tetrachlorobenzene		ND< 374	U	ND< 346	U	ND< 368	U	ND< 351	U	ND< 384	U	ND< 331	U	ND< 1670	U	ND< 331	U	ND< 400	U	ND< 355	U	ND< 337	U	ND< 1820	U	ND< 335	U	ND< 375	U
1,2,4-Trichlorobenzene		ND< 374	U	ND< 346	U	ND< 368	U	ND< 351	U	ND< 384	U	ND< 331	U	ND< 1670	U	ND< 331	U	ND< 400	U	ND< 355	U	ND< 337	U	ND< 1820	U	ND< 335	U	ND< 375	U
1,2-Dichlorobenzene	100000	ND< 374	U	ND< 346	U	ND< 368	U	ND< 351	U	ND< 384	U	ND< 331	U	ND< 1670	U	ND< 331	U	ND< 400	U	ND< 355	U	ND< 337	U	ND< 1820	U	ND< 335	U	ND< 375	U
1,3-Dichlorobenzene	49000	ND< 374	U	ND< 346	U	ND< 368	U	ND< 351	U	ND< 384	U	ND< 331	U	ND< 1670	U	ND< 331	U	ND< 400	U	ND< 355	U	ND< 337	U	ND< 1820	U	ND< 335	U	ND< 375	U
1,4-Dichlorobenzene	13000	ND< 374	U	ND< 346	U	ND< 368	U	ND< 351	U	ND< 384	U	ND< 331	U	ND< 1670	U	ND< 331	U	ND< 400	U	ND< 355	U	ND< 337	U	ND< 1820	U	ND< 335	U	ND< 375	U
2,2-Oxybis(2-Chloropropane)		ND< 374	U	ND< 346	U	ND< 368	U	ND< 351	U	ND< 384	U	ND< 331	U	ND< 1670	U	ND< 331	U	ND< 400	U	ND< 355	U	ND< 337	U	ND< 1820	U	ND< 335	U	ND< 375	U
2,3,4,6-Tetrachlorophenol		ND< 374	U	ND< 346	U	ND< 368	U	ND< 351	U	ND< 384	U	ND< 331	U	ND< 1670	U	ND< 331	U	ND< 400	U	ND< 355	U	ND< 337	U	ND< 1820	U	ND< 335	U	ND< 375	U
2,4,5-Trichlorophenol		ND< 748	U	ND< 693	U	ND< 736	U	ND< 702	U	ND< 768	U	ND< 662	U	ND< 3340	U	ND< 661	U	ND< 799	U	ND< 709	U	ND< 675	U	ND< 3630	U	ND< 670	U	ND< 749	U
2,4,6-Trichlorophenol		ND< 374	U	ND< 346	U	ND< 368	U	ND< 351	U	ND< 384	U	ND< 331	U	ND< 1670	U	ND< 331	U	ND< 400	U	ND< 355	U	ND< 337	U	ND< 1820	U	ND< 335	U	ND< 375	U
2,4-Dichlorophenol		ND< 374	U	ND< 346	U	ND< 368	U	ND< 351	U	ND< 384	U	ND< 331	U	ND< 1670	U	ND< 331	U	ND< 400	U	ND< 355	U	ND< 337	U	ND< 1820	U	ND< 335	U	ND< 375	U
2,4-Dimethylphenol		ND< 374	U	ND< 346	U	ND< 368	U	ND< 351	U	ND< 384	U	ND< 331	U	ND< 1670	U	ND< 331	U	ND< 400	U	ND< 355	U	ND< 337	U	ND< 1820	U	ND< 335	U	ND< 375	U
2,4-Dinitrophenol		ND< 748	U	ND< 693	U	ND< 736	U	ND< 702	U	ND< 768	U	ND< 662	U	ND< 3340	U	ND< 661	U	ND< 799	U	ND< 709	U	ND< 675	U	ND< 3630	U	ND< 670	U	ND< 749	U
2,4-Dinitrotoluene		ND< 374	U	ND< 346	U	ND< 368	U	ND< 351	U	ND< 384	U	ND< 331	U	ND< 1670	U	ND< 331	U	ND< 400	U	ND< 355	U	ND< 337	U	ND< 1820	U	ND< 335	U	ND< 375	U
2,6-Dinitrotoluene		ND< 374	U	ND< 346	U	ND< 368	U	ND< 351	U	ND< 384	U	ND< 331	U	ND< 1670	U	ND< 331	U	ND< 400	U	ND< 355	U	ND< 337	U	ND< 1820	U	ND< 335	U	ND< 375	U
2-Chloronaphthalene		ND< 374	U	ND< 346	U	ND< 368	U	ND< 351	U	ND< 384	U	ND< 331	U	ND< 1670	U	ND< 331	U	ND< 400	U	ND< 355	U	ND< 337	U	ND< 1820	U	ND< 335	U	ND< 375	U
2-Chlorophenol		ND< 374	U	ND< 346	U	ND< 368	U	ND< 351	U	ND< 384	U	ND< 331	U	ND< 1670	U	ND< 331	U	ND< 400	U	ND< 355	U	ND< 337	U	ND< 1820	U	ND< 335	U	ND< 375	U
2-Methylnaphthalene		ND< 374	U	ND< 346	U	ND< 368	U	ND< 351	U	ND< 384	U	ND< 331	U	ND< 1670	U	ND< 331	U	ND< 400	U	ND< 355	U	ND< 337	U	ND< 1820	U	ND< 335	U	ND< 375	U
2-Methylphenol (O-Cresol)	100000	ND< 374	U	ND< 346	U	ND< 368	U	ND< 351	U	ND< 384	U	ND< 331	U	ND< 1670	U	ND< 331	U	ND< 400	U	ND< 355	U	ND< 337	U	ND< 1820	U	ND< 335	U	ND< 375	U
2-Nitroaniline		ND< 748	U	ND< 693	U	ND< 736	U	ND< 702	U	ND< 768	U	ND< 662	U	ND< 3340	U	ND< 661	U	ND< 799	U	ND< 709	U	ND< 675	U	ND< 3630	U	ND< 670	U	ND< 749	U
2-Nitrophenol		ND< 374	U	ND< 346	U	ND< 368	U	ND< 351	U	ND< 384	U	ND< 331	U	ND< 1670	U	ND< 331	U	ND< 400	U	ND< 355	U	ND< 337	U	ND< 1820	U	ND< 335	U	ND< 375	U
3,3'-Dichlorobenzidine		ND< 374	U	ND< 346	U	ND< 368	U	ND< 351	U	ND< 384	U	ND< 331	U	ND< 1670	U	ND< 331	U	ND< 400	U	ND< 355	U	ND< 337	U	ND< 1820	U	ND< 335	U	ND< 375	U
3-Methylphenol	100000	ND< 374	U	ND< 346	U	ND< 368	U	ND< 351	U	ND< 384	U	ND< 331	U	ND< 1670	U	ND< 331	U	ND< 400	U	ND< 355	U	ND< 337	U	ND< 1820	U	ND< 335	U	ND< 375	U
3-Nitroaniline		ND< 748	U	ND< 693	U	ND< 736	U	ND< 702	U	ND< 768	U	ND< 662	U	ND< 3340	U	ND< 661	U	ND< 799	U	ND< 709	U	ND< 675	U	ND< 3630	U	ND< 670	U	ND< 749	U
4,6-Dinitro-2-Methylphenol		ND< 748	U	ND< 693	U	ND< 736	U	ND< 702	U	ND< 768	U	ND< 662	U	ND< 3340	U	ND< 661	U	ND< 799	U	ND< 709	U	ND< 675	U	ND< 3630	U	ND< 670	U	ND< 749	U
4-Bromophenyl Phenyl Ether		ND< 374	U	ND< 346	U	ND< 368	U	ND< 351	U	ND< 384	U	ND< 331	U	ND< 1670	U	ND< 331	U	ND< 400	U	ND< 355	U	ND< 337	U	ND< 1820	U	ND< 335	U	ND< 375	U
4-Chloro-3-Methylphenol		ND< 374	U	ND< 346	U	ND< 368	U	ND< 351	U	ND< 384	U	ND< 331	U	ND< 1670	U	ND< 331	U	ND< 400	U	ND< 355	U	ND< 337	U	ND< 1820	U	ND< 335	U	ND< 375	U
4-Chloroaniline		ND< 374	U	ND< 346	U	ND< 368	U	ND< 351	U	ND< 384	U	ND< 331	U	ND< 1670	U	ND< 331	U	ND< 400	U	ND< 355	U	ND< 337	U	ND< 1820	U	ND< 335	U	ND< 375	U
4-Chlorophenyl Phenyl Ether		ND< 374	U	ND< 346	U	ND< 368	U	ND< 351	U	ND< 384	U	ND< 331	U	ND< 1670	U	ND< 331	U	ND< 400	U	ND< 355	U	ND< 337	U	ND< 1820	U	ND< 335	U	ND< 375	U
4-Nitroaniline		ND< 748	U	ND< 693	U	ND< 736	U	ND< 702	U	ND< 768	U	ND< 662	U	ND< 3340	U	ND< 661	U	ND< 799	U	ND< 709	U	ND< 675	U	ND< 3630	U	ND< 670	U	ND< 749	U
4-Nitrophenol		ND< 748	U	ND< 693	U	ND< 736	U	ND< 702	U	ND< 768	U	ND< 662	U	ND< 3340	U	ND< 661	U	ND< 799	U	ND< 709	U	ND< 675	U	ND< 3630	U	ND< 670	U	ND< 749	U
Acenaphthene	100000	ND< 374	U	ND< 346	U	ND< 368	U	ND< 351	U	ND< 384	U	ND< 331	U	ND< 1670	U	ND< 331	U	ND< 400	U	ND< 355	U	ND< 337	U	ND< 1820	U	ND< 335	U	ND< 375	U
Acenaphthylene	100000	ND< 374	U	ND< 346	U	ND< 368	U	ND< 351	U	ND< 384	U	ND< 331	U	ND< 1670	U	ND< 331	U	ND< 400	U	ND< 355	U	180	J	ND< 1820	U	ND< 335	U	ND< 375	U
Acetophenone		ND< 374	U	ND< 346	U	ND< 368	U	ND< 351	U	ND< 384	U	ND< 331	U	ND< 1670	U	ND< 331	U	ND< 400	U	ND< 355	U	ND< 337	U	ND< 1820	U	ND< 335	U	ND< 375	U
Anthracene	100000	ND< 374	U	ND< 346	U	ND< 368	U	ND< 351	U	ND< 384	U	ND< 331	U	ND< 1670	U	229	J	ND< 400	U	ND< 355	U	285	J	ND< 1820	U	ND< 335	U	ND< 375	U
Atrazine		ND< 374	U	ND< 346	U	ND< 368	U	ND< 351	U	ND< 384	U	ND< 331	U	ND< 1670	U	ND< 331	U	ND< 400	U	ND< 355	U	ND< 337	U	ND< 1820	U	ND< 335	U	ND< 375	U
Benzaldehyde		ND< 374	U	ND< 346	U	ND< 368	U	ND< 351	U	ND< 384	U	ND< 331	U	ND< 1670	U	ND< 331	U	ND< 400	U	ND< 355	U	ND< 337	U	ND< 1820	U	ND< 335	U	ND< 375	U
Benzo(A)Anthracene	**1000**	ND< 374	U	ND< 346	U	ND< 368	U	ND< 351	U	ND< 384	U	ND< 331	U	883	J	395		ND< 400	U	ND< 355	U	647		**ND< 1820**	**U**	ND< 335	U	ND< 375	U
Benzo(A)Pyrene	**1000**	ND< 374	U	ND< 346	U	ND< 368	U	ND< 351	U	ND< 384	U	ND< 331	U	950	J	369		ND< 400	U	ND< 355	U	630		**ND< 1820**	**U**	ND< 335	U	ND< 375	U
Benzo(B)Fluoranthene	**1000**	ND< 374	U	ND< 346	U	ND< 368	U	ND< 351	U	ND< 384	U	ND< 331	U	**ND< 1670**	**U**	366		ND< 400	U	ND< 355	U	512		**ND< 1820**	**U**	ND< 335	U	ND< 375	U
Benzo(G,H,I)Perylene	100000	ND< 374	U	ND< 346	U	ND< 368	U	ND< 351	U	ND< 384	U	ND< 331	U	ND< 1670	U	242	J	ND< 400	U	ND< 355	U	420		ND< 1820	U	ND< 335	U	ND< 375	U
Benzo(K)Fluoranthene	3900	ND< 374	U	ND< 346	U	ND< 368	U	ND< 351	U	ND< 384	U	ND< 331	U	1010	J	231	J	ND< 400	U	ND< 355	U	502		ND< 1820	U	ND< 335	U	ND< 375	U
Benzyl Butyl Phthalate		ND< 374	U	ND< 346	U	ND< 368	U	ND< 351	U	ND< 384	U	ND< 331	U	ND< 1670	U	ND< 331	U	ND< 400	U	ND< 355	U	ND< 337	U	ND< 1820	U	ND< 335	U	ND< 375	U
Biphenyl (Diphenyl)		ND< 374	U	ND< 346	U	ND< 368	U	ND< 351	U	ND< 384	U	ND< 331	U	ND< 1670	U	ND< 331	U	ND< 400	U	ND< 355	U	ND< 337	U	ND< 1820	U	ND< 335	U	ND< 375	U
Bis(2-Chloroethoxy) Methane		ND< 374	U	ND< 346	U	ND< 368	U	ND< 351	U	ND< 384	U	ND< 331	U	ND< 1670	U	ND< 331	U	ND< 400	U	ND< 355	U	ND< 337	U	ND< 1820	U	ND< 335	U	ND< 375	U
Bis(2-Chloroethyl) Ether (2-Chloroethyl Ether)		ND< 374	U	ND< 346	U	ND< 368	U	ND< 351	U	ND< 384	U	ND< 331	U	ND< 1670	U	ND< 331	U	ND< 400	U	ND< 355	U	ND< 337	U	ND< 1820	U	ND< 335	U	ND< 375	U
Bis(2-Ethylhexyl) Phthalate		ND< 374	U	ND< 346	U	ND< 368	U	ND< 351	U	ND< 384	U	ND< 331	U	ND< 1670	U	ND< 331	U	ND< 400	U	ND< 355	U	ND< 337	U	ND< 1820	U	ND< 335	U	ND< 375	U
Caprolactam		ND< 374	U	ND< 346	U	ND< 368	U	ND< 351	U	ND< 384	U	ND< 331	U	ND< 1670	U	ND< 331	U	ND< 400	U	ND< 355	U	ND< 337	U	ND< 1820	U	ND< 335	U	ND< 375	U
Carbazole		ND< 374	U	ND< 346	U	ND< 368	U	ND< 351	U	ND< 384	U	ND< 331	U	ND< 1670	U	ND< 331	U	ND< 400	U	ND< 355	U	ND< 337	U	ND< 1820	U	ND< 335	U	ND< 375	U
Chrysene	3900	ND< 374	U	ND< 346	U	ND< 368	U	ND< 351	U	ND< 384	U	ND< 331	U	1000	J	418		ND< 400	U	ND< 355	U	763		ND< 1820	U	ND< 335	U	ND< 375	U
Dibenz(A,H)Anthracene	**330**	**ND< 374**	**U**	**ND< 346**	**U**	**ND< 368**	**U**	**ND< 351**	**U**	**ND< 384**	**U**	**ND< 331**	**U**	**ND< 1670**	**U**	**ND< 331**	**U**	**ND< 400**	**U**	**ND< 355**	**U**	**ND< 337**	**U**	**ND< 1820**	**U**	**ND< 335**	**U**	**ND< 375**	**U**
Dibenzofuran	59000	ND< 374	U	ND< 346	U	ND< 368	U	ND< 351	U	ND< 384	U	ND< 331	U	ND< 1670	U	ND< 331	U	ND< 400	U	ND< 355	U	ND< 337	U	ND< 1820	U	ND< 335	U	ND< 375	U
Diethyl Phthalate		ND< 374	U	ND< 346	U	ND< 368	U	ND< 351	U	ND< 384	U	ND< 331	U	ND< 1670	U	ND< 331	U	ND< 400	U	ND< 355	U	ND< 337	U	ND< 1820	U	ND< 335	U	ND< 375	U
Dimethyl Phthalate		ND< 748	U	ND< 693	U	ND< 736	U	ND< 702	U	ND< 768	U	ND< 662	U	ND< 3340	U	ND< 661	U	ND< 799	U	ND< 709	U	ND< 675	U	ND< 3630	U	ND< 670	U	ND< 749	U
Di-N-Butyl Phthalate		ND< 374	U	ND< 346	U	ND< 368	U	ND< 351	U	ND< 384	U	ND< 331	U	ND< 1670	U	ND< 331	U	ND< 400	U	ND< 355	U	ND< 337	U	ND< 1820	U	ND< 335	U	ND< 375	U
Di-N-Octylphthalate		ND< 374	U	ND< 346	U	ND< 368	U	ND< 351	U	ND< 384	U	ND< 331	U	ND< 1670	U	ND< 331	U	ND< 400	U	ND< 355	U	ND< 337	U	ND< 1820	U	ND< 335	U	ND< 375	U
Fluoranthene	100000	211	J	ND< 346	U	ND< 368	U	ND< 351	U	ND< 384	U	ND< 331	U	1870		868		291	J	ND< 355	U	1290		ND< 1820	U	ND< 335	U	ND< 375	U
Fluorene	100000	ND< 374	U	ND< 346	U	ND< 368	U	ND< 351	U	ND< 384	U	ND< 331	U	ND< 1670	U	ND< 331	U	ND< 400	U	ND< 355	U	ND< 337	U	ND< 1820	U	ND< 335	U	ND< 375	U
Hexachlorobenzene	**1200**	ND< 374	U	ND< 346	U	ND< 368	U	ND< 351	U	ND< 384	U	ND< 331	U	**ND< 1670**	**U**	ND< 331	U	ND< 400	U	ND< 355	U	ND< 337	U	**ND< 1820**	**U**	ND< 335	U	ND< 375	U
Hexachlorobutadiene		ND< 374	U	ND< 346	U	ND< 368	U	ND< 351	U	ND< 384	U	ND< 331	U	ND< 1670	U	ND< 331	U	ND< 400	U	ND< 355	U	ND< 337	U	ND< 1820	U	ND< 335	U	ND< 375	U
Hexachlorocyclopentadiene		ND< 374	U	ND< 346	U	ND< 368	U	ND< 351	U	ND< 384	U	ND< 331	U	ND< 1670	U	ND< 331	U	ND< 400	U	ND< 355	U	ND< 337	U	ND< 1820	U	ND< 335	U	ND< 375	U
Hexachloroethane		ND< 374	U	ND< 346	U	ND< 368	U	ND< 351	U	ND< 384	U	ND< 331	U	ND< 1670	U	ND< 331	U	ND< 400	U	ND< 355	U	ND< 337	U	ND< 1820	U	ND< 335	U	ND< 375	U
Indeno(1,2,3-C,D)Pyrene	**500**	ND< 374	U	ND< 346	U	ND< 368	U	ND< 351	U	ND< 384	U	ND< 331	U	**ND< 1670**	**U**	302	J	ND< 400	U	ND< 355	U	440		**ND< 1820**	**U**	ND< 335	U	ND< 375	U
Isophorone		ND< 374	U	ND< 346	U	ND< 368	U	ND< 351	U	ND< 384	U	ND< 331	U	ND< 1670	U	ND< 331	U	ND< 400	U	ND< 355	U	ND< 337	U	ND< 1820	U	ND< 335	U	ND< 375	U
Naphthalene	100000	ND< 374	U	ND< 346	U	ND< 368	U	ND< 351	U	ND< 384	U	ND< 331	U	ND< 1670	U	ND< 331	U	ND< 400	U	ND< 355	U	ND< 337	U	ND< 1820	U	ND< 335	U	ND< 375	U
Nitrobenzene		ND< 374	U	ND< 346	U	ND< 368	U	ND< 351	U	ND< 384	U	ND< 331	U	ND< 1670	U	ND< 331	U	ND< 400	U	ND< 355	U	ND< 337	U	ND< 1820	U	ND< 335	U	ND< 375	U
N-Nitrosodi-N-Propylamine		ND< 374	U	ND< 346	U	ND< 368	U	ND< 351	U	ND< 384	U	ND< 331	U	ND< 1670	U	ND< 331	U	ND< 400	U	ND< 355	U	ND< 337	U	ND< 1820	U	ND< 335	U	ND< 375	U
N-Nitrosodiphenylamine		ND< 374	U	ND< 346	U	ND< 368	U	ND< 351	U	ND< 384	U	ND< 331	U	ND< 1670	U	ND< 331	U	ND< 400	U	ND< 355	U	ND< 337	U	ND< 1820	U	ND< 335	U	ND< 375	U
Pentachlorophenol	6700	ND< 748	U	ND< 693	U	ND< 736	U	ND< 702	U	ND< 768	U	ND< 662	U	ND< 3340	U	ND< 661	U	ND< 799	U	ND< 709	U	ND< 675	U	ND< 3630	U	ND< 670	U	ND< 749	U
Phenanthrene	100000	ND< 374	U	ND< 346	U	ND< 368	U	ND< 351	U	ND< 384	U	ND< 331	U	1250	J	741		ND< 400	U	ND< 355	U	838		ND< 1820	U	ND< 335	U	ND< 375	U
Phenol	100000	ND< 374	U	ND< 346	U	ND< 368	U	ND< 351	U	ND< 384	U	ND< 331	U	ND< 1670	U	ND< 331	U	ND< 400	U	ND< 355	U	ND< 337	U	ND< 1820	U	ND< 335	U	ND< 375	U
Pyrene	100000	200	J	ND< 346	U	ND< 368	U	ND< 351	U	ND< 384	U	ND< 331	U	1890		707		310	J	ND< 355	U	1320		ND< 1820	U	ND< 335	U	ND< 375	U

NOTES:

1. Soil sample analytical results are compared to the New York State Department of Environmental Conservation (NYSDEC) Title 6 of the official compilation of New York Codes, Rules, and Regulations (NYCRR) Part 375 Restricted Residential Soil Cleanup Objectives (RRSCOs).
2. RRSCO exceedances are in bold and highlighted yellow.
3. ND = Not Detected
4. Results shown as "ND" with Reporting Limits exceeding RRSCOs are in bold.
5. SVOCs = Semi-Volatile Organic Compounds
6. µg/kg = micrograms per kilogram.
7. Qualifier (Q) definitions are provided in the official lab reports.

TABLE 9B: Semi-Volatile Organic Compounds (SVOCs) in Soil
Surface soil samples collected outside of AOCs
Soil Sample Results (non-QA/QC)
Hudson River Psychiatric Center - North BCP Site, Poughkeepsie, NY
PVE Sheffler File #560909

	Date Sampled	5/1/2014		5/1/2014		5/1/2014		5/1/2014		5/1/2014		5/1/2014		5/1/2014		11/24/2014		12/15/2014		11/24/2014		12/15/2014		11/24/2014		12/15/2014		11/24/2014	
	Location	SS-15		SS-16		SS-16		SS-17		SS-17		SS-18		SS-18		SS-19		SS-19		SS-20		SS-20		SS-21		SS-21		SS-22	
	Sample ID	SS-15 12-16"		SS-16 0-2"		SS-16 12-20"		SS-17 0-2"		SS-17 12-16"		SS-18 0-2"		SS-18 12-18"		SS-19 (0-2")		SS-19 2-24"		SS-20 (0-2")		SS-20 2-24"		SS-21 (0-2")		SS-21 2-24"		SS-22 (0-2")	
Analyte	RRSCOs	Result	Q	Result	Q	Result	Q	Result	Q	Result	Q	Result	Q	Result	Q	Result	Q	Result	Q	Result	Q	Result	Q	Result	Q	Result	Q	Result	Q
SVOCs (µg/kg)																													
1,2,4,5-Tetrachlorobenzene		ND< 343	U	ND< 399	U	ND< 341	U	ND< 387	U	ND< 349	U	ND< 362	U	ND< 339	U	ND< 395	U	ND< 338	U	ND< 379	U	ND< 326	U	ND< 404	U	ND< 340	U	ND< 346	U
1,2,4-Trichlorobenzene		ND< 343	U	ND< 399	U	ND< 341	U	ND< 387	U	ND< 349	U	ND< 362	U	ND< 339	U	ND< 395	U	ND< 338	U	ND< 379	U	ND< 326	U	ND< 404	U	ND< 340	U	ND< 346	U
1,2-Dichlorobenzene	100000	ND< 343	U	ND< 399	U	ND< 341	U	ND< 387	U	ND< 349	U	ND< 362	U	ND< 339	U	ND< 395	U	ND< 338	U	ND< 379	U	ND< 326	U	ND< 404	U	ND< 340	U	ND< 346	U
1,3-Dichlorobenzene	49000	ND< 343	U	ND< 399	U	ND< 341	U	ND< 387	U	ND< 349	U	ND< 362	U	ND< 339	U	ND< 395	U	ND< 338	U	ND< 379	U	ND< 326	U	ND< 404	U	ND< 340	U	ND< 346	U
1,4-Dichlorobenzene	13000	ND< 343	U	ND< 399	U	ND< 341	U	ND< 387	U	ND< 349	U	ND< 362	U	ND< 339	U	ND< 395	U	ND< 338	U	ND< 379	U	ND< 326	U	ND< 404	U	ND< 340	U	ND< 346	U
2,2-Oxybis(2-Chloropropane)		ND< 343	U	ND< 399	U	ND< 341	U	ND< 387	U	ND< 349	U	ND< 362	U	ND< 339	U	ND< 395	U	ND< 338	U	ND< 379	U	ND< 326	U	ND< 404	U	ND< 340	U	ND< 346	U
2,3,4,6-Tetrachlorophenol		ND< 343	U	ND< 399	U	ND< 341	U	ND< 387	U	ND< 349	U	ND< 362	U	ND< 339	U	ND< 395	U	ND< 338	U	ND< 379	U	ND< 326	U	ND< 404	U	ND< 340	U	ND< 346	U
2,4,5-Trichlorophenol		ND< 685	U	ND< 798	U	ND< 682	U	ND< 773	U	ND< 698	U	ND< 723	U	ND< 678	U	ND< 790	U	ND< 677	U	ND< 759	U	ND< 652	U	ND< 807	U	ND< 680	U	ND< 692	U
2,4,6-Trichlorophenol		ND< 343	U	ND< 399	U	ND< 341	U	ND< 387	U	ND< 349	U	ND< 362	U	ND< 339	U	ND< 395	U	ND< 338	U	ND< 379	U	ND< 326	U	ND< 404	U	ND< 340	U	ND< 346	U
2,4-Dichlorophenol		ND< 343	U	ND< 399	U	ND< 341	U	ND< 387	U	ND< 349	U	ND< 362	U	ND< 339	U	ND< 395	U	ND< 338	U	ND< 379	U	ND< 326	U	ND< 404	U	ND< 340	U	ND< 346	U
2,4-Dimethylphenol		ND< 343	U	ND< 399	U	ND< 341	U	ND< 387	U	ND< 349	U	ND< 362	U	ND< 339	U	ND< 395	U	ND< 338	U	ND< 379	U	ND< 326	U	ND< 404	U	ND< 340	U	ND< 346	U
2,4-Dinitrophenol		ND< 685	U	ND< 798	U	ND< 682	U	ND< 773	U	ND< 698	U	ND< 723	U	ND< 678	U	ND< 790	U	ND< 677	U	ND< 759	U	ND< 652	U	ND< 807	U	ND< 680	U	ND< 692	U
2,4-Dinitrotoluene		ND< 343	U	ND< 399	U	ND< 341	U	ND< 387	U	ND< 349	U	ND< 362	U	ND< 339	U	ND< 395	U	ND< 338	U	ND< 379	U	ND< 326	U	ND< 404	U	ND< 340	U	ND< 346	U
2,6-Dinitrotoluene		ND< 343	U	ND< 399	U	ND< 341	U	ND< 387	U	ND< 349	U	ND< 362	U	ND< 339	U	ND< 395	U	ND< 338	U	ND< 379	U	ND< 326	U	ND< 404	U	ND< 340	U	ND< 346	U
2-Chloronaphthalene		ND< 343	U	ND< 399	U	ND< 341	U	ND< 387	U	ND< 349	U	ND< 362	U	ND< 339	U	ND< 395	U	ND< 338	U	ND< 379	U	ND< 326	U	ND< 404	U	ND< 340	U	ND< 346	U
2-Chlorophenol		ND< 343	U	ND< 399	U	ND< 341	U	ND< 387	U	ND< 349	U	ND< 362	U	ND< 339	U	ND< 395	U	ND< 338	U	ND< 379	U	ND< 326	U	ND< 404	U	ND< 340	U	ND< 346	U
2-Methylnaphthalene		ND< 343	U	ND< 399	U	ND< 341	U	ND< 387	U	ND< 349	U	ND< 362	U	216	J	ND< 395	U	ND< 338	U	ND< 379	U	ND< 326	U	ND< 404	U	ND< 340	U	ND< 346	U
2-Methylphenol (O-Cresol)	100000	ND< 343	U	ND< 399	U	ND< 341	U	ND< 387	U	ND< 349	U	ND< 362	U	ND< 339	U	ND< 395	U	ND< 338	U	ND< 379	U	ND< 326	U	ND< 404	U	ND< 340	U	ND< 346	U
2-Nitroaniline		ND< 685	U	ND< 798	U	ND< 682	U	ND< 773	U	ND< 698	U	ND< 723	U	ND< 678	U	ND< 790	U	ND< 677	U	ND< 759	U	ND< 652	U	ND< 807	U	ND< 680	U	ND< 692	U
2-Nitrophenol		ND< 343	U	ND< 399	U	ND< 341	U	ND< 387	U	ND< 349	U	ND< 362	U	ND< 339	U	ND< 395	U	ND< 338	U	ND< 379	U	ND< 326	U	ND< 404	U	ND< 340	U	ND< 346	U
3,3'-Dichlorobenzidine		ND< 343	U	ND< 399	U	ND< 341	U	ND< 387	U	ND< 349	U	ND< 362	U	ND< 339	U	ND< 395	U	ND< 338	U	ND< 379	U	ND< 326	U	ND< 404	U	ND< 340	U	ND< 346	U
3-Methylphenol	100000	ND< 343	U	ND< 399	U	ND< 341	U	ND< 387	U	ND< 349	U	ND< 362	U	ND< 339	U	ND< 395	U	ND< 338	U	ND< 379	U	ND< 326	U	ND< 404	U	ND< 340	U	ND< 346	U
3-Nitroaniline		ND< 685	U	ND< 798	U	ND< 682	U	ND< 773	U	ND< 698	U	ND< 723	U	ND< 678	U	ND< 790	U	ND< 677	U	ND< 759	U	ND< 652	U	ND< 807	U	ND< 680	U	ND< 692	U
4,6-Dinitro-2-Methylphenol		ND< 685	U	ND< 798	U	ND< 682	U	ND< 773	U	ND< 698	U	ND< 723	U	ND< 678	U	ND< 790	U	ND< 677	U	ND< 759	U	ND< 652	U	ND< 807	U	ND< 680	U	ND< 692	U
4-Bromophenyl Phenyl Ether		ND< 343	U	ND< 399	U	ND< 341	U	ND< 387	U	ND< 349	U	ND< 362	U	ND< 339	U	ND< 395	U	ND< 338	U	ND< 379	U	ND< 326	U	ND< 404	U	ND< 340	U	ND< 346	U
4-Chloro-3-Methylphenol		ND< 343	U	ND< 399	U	ND< 341	U	ND< 387	U	ND< 349	U	ND< 362	U	ND< 339	U	ND< 395	U	ND< 338	U	ND< 379	U	ND< 326	U	ND< 404	U	ND< 340	U	ND< 346	U
4-Chloroaniline		ND< 343	U	ND< 399	U	ND< 341	U	ND< 387	U	ND< 349	U	ND< 362	U	ND< 339	U	ND< 395	U	ND< 338	U	ND< 379	U	ND< 326	U	ND< 404	U	ND< 340	U	ND< 346	U
4-Chlorophenyl Phenyl Ether		ND< 343	U	ND< 399	U	ND< 341	U	ND< 387	U	ND< 349	U	ND< 362	U	ND< 339	U	ND< 395	U	ND< 338	U	ND< 379	U	ND< 326	U	ND< 404	U	ND< 340	U	ND< 346	U
4-Nitroaniline		ND< 685	U	ND< 798	U	ND< 682	U	ND< 773	U	ND< 698	U	ND< 723	U	ND< 678	U	ND< 790	U	ND< 677	U	ND< 759	U	ND< 652	U	ND< 807	U	ND< 680	U	ND< 692	U
4-Nitrophenol		ND< 685	U	ND< 798	U	ND< 682	U	ND< 773	U	ND< 698	U	ND< 723	U	ND< 678	U	ND< 790	U	ND< 677	U	ND< 759	U	ND< 652	U	ND< 807	U	ND< 680	U	ND< 692	U
Acenaphthene	100000	ND< 343	U	ND< 399	U	ND< 341	U	ND< 387	U	ND< 349	U	ND< 362	U	ND< 339	U	ND< 395	U	ND< 338	U	ND< 379	U	ND< 326	U	ND< 404	U	ND< 340	U	ND< 346	U
Acenaphthylene	100000	ND< 343	U	ND< 399	U	ND< 341	U	ND< 387	U	ND< 349	U	ND< 362	U	ND< 339	U	223	J	ND< 338	U	ND< 379	U	ND< 326	U	1790		ND< 340	U	ND< 346	U
Acetophenone		ND< 343	U	ND< 399	U	ND< 341	U	ND< 387	U	ND< 349	U	ND< 362	U	ND< 339	U	ND< 395	U	ND< 338	U	ND< 379	U	ND< 326	U	ND< 404	U	ND< 340	U	ND< 346	U
Anthracene	100000	ND< 343	U	ND< 399	U	ND< 341	U	ND< 387	U	ND< 349	U	ND< 362	U	ND< 339	U	ND< 395	U	ND< 338	U	ND< 379	U	ND< 326	U	1310		ND< 340	U	ND< 346	U
Atrazine		ND< 343	U	ND< 399	U	ND< 341	U	ND< 387	U	ND< 349	U	ND< 362	U	ND< 339	U	ND< 395	U	ND< 338	U	ND< 379	U	ND< 326	U	ND< 404	U	ND< 340	U	ND< 346	U
Benzaldehyde		ND< 343	U	ND< 399	U	ND< 341	U	ND< 387	U	ND< 349	U	ND< 362	U	ND< 339	U	ND< 395	U	ND< 338	U	ND< 379	U	ND< 326	U	ND< 404	U	ND< 340	U	ND< 346	U
Benzo(A)Anthracene	**1000**	ND< 343	U	ND< 399	U	ND< 341	U	ND< 387	U	ND< 349	U	ND< 362	U	ND< 339	U	493		377		365	J	ND< 326	U	**1830**		219	J	ND< 346	U
Benzo(A)Pyrene	**1000**	ND< 343	U	ND< 399	U	ND< 341	U	ND< 387	U	ND< 349	U	ND< 362	U	ND< 339	U	547		377		385		ND< 326	U	**2350**		263	J	ND< 346	U
Benzo(B)Fluoranthene	**1000**	ND< 343	U	ND< 399	U	ND< 341	U	ND< 387	U	ND< 349	U	ND< 362	U	ND< 339	U	488		360		352	J	ND< 326	U	**2610**		249	J	ND< 346	U
Benzo(G,H,I)Perylene	100000	ND< 343	U	ND< 399	U	ND< 341	U	ND< 387	U	ND< 349	U	ND< 362	U	ND< 339	U	362	J	242	J	254	J	ND< 326	U	2560		222	J	ND< 346	U
Benzo(K)Fluoranthene	3900	ND< 343	U	ND< 399	U	ND< 341	U	ND< 387	U	ND< 349	U	ND< 362	U	ND< 339	U	511		332	J	373	J	ND< 326	U	1610		213	J	ND< 346	U
Benzyl Butyl Phthalate		ND< 343	U	ND< 399	U	ND< 341	U	ND< 387	U	ND< 349	U	ND< 362	U	ND< 339	U	ND< 395	U	ND< 338	U	ND< 379	U	ND< 326	U	ND< 404	U	ND< 340	U	ND< 346	U
Biphenyl (Diphenyl)		ND< 343	U	ND< 399	U	ND< 341	U	ND< 387	U	ND< 349	U	ND< 362	U	ND< 339	U	ND< 395	U	ND< 338	U	ND< 379	U	ND< 326	U	ND< 404	U	ND< 340	U	ND< 346	U
Bis(2-Chloroethoxy) Methane		ND< 343	U	ND< 399	U	ND< 341	U	ND< 387	U	ND< 349	U	ND< 362	U	ND< 339	U	ND< 395	U	ND< 338	U	ND< 379	U	ND< 326	U	ND< 404	U	ND< 340	U	ND< 346	U
Bis(2-Chloroethyl) Ether (2-Chloroethyl Ether)		ND< 343	U	ND< 399	U	ND< 341	U	ND< 387	U	ND< 349	U	ND< 362	U	ND< 339	U	ND< 395	U	ND< 338	U	ND< 379	U	ND< 326	U	ND< 404	U	ND< 340	U	ND< 346	U
Bis(2-Ethylhexyl) Phthalate		ND< 343	U	ND< 399	U	ND< 341	U	ND< 387	U	ND< 349	U	ND< 362	U	ND< 339	U	ND< 395	U	ND< 338	U	ND< 379	U	ND< 326	U	ND< 404	U	ND< 340	U	ND< 346	U
Caprolactam		ND< 343	U	ND< 399	U	ND< 341	U	ND< 387	U	ND< 349	U	ND< 362	U	ND< 339	U	ND< 395	U	ND< 338	U	ND< 379	U	ND< 326	U	ND< 404	U	ND< 340	U	ND< 346	U
Carbazole		ND< 343	U	ND< 399	U	ND< 341	U	ND< 387	U	ND< 349	U	ND< 362	U	ND< 339	U	ND< 395	U	ND< 338	U	ND< 379	U	ND< 326	U	245	J	ND< 340	U	ND< 346	U
Chrysene	3900	ND< 343	U	ND< 399	U	ND< 341	U	ND< 387	U	ND< 349	U	ND< 362	U	ND< 339	U	666		479		476		ND< 326	U	2150		269	J	ND< 346	U
Dibenz(A,H)Anthracene	**330**	**ND< 343**	**U**	**ND< 399**	**U**	**ND< 341**	**U**	**ND< 387**	**U**	**ND< 349**	**U**	**ND< 362**	**U**	**ND< 339**	**U**	**ND< 395**	**U**	**ND< 338**	**U**	**ND< 379**	**U**	ND< 326	U	**563**		**ND< 340**	**U**	**ND< 346**	**U**
Dibenzofuran	59000	ND< 343	U	ND< 399	U	ND< 341	U	ND< 387	U	ND< 349	U	ND< 362	U	ND< 339	U	ND< 395	U	ND< 338	U	ND< 379	U	ND< 326	U	ND< 404	U	ND< 340	U	ND< 346	U
Diethyl Phthalate		ND< 343	U	ND< 399	U	ND< 341	U	ND< 387	U	ND< 349	U	ND< 362	U	ND< 339	U	ND< 395	U	ND< 338	U	ND< 379	U	ND< 326	U	ND< 404	U	ND< 340	U	ND< 346	U
Dimethyl Phthalate		ND< 685	U	ND< 798	U	ND< 682	U	ND< 773	U	ND< 698	U	ND< 723	U	ND< 678	U	ND< 790	U	ND< 677	U	ND< 759	U	ND< 652	U	ND< 807	U	ND< 680	U	ND< 692	U
Di-N-Butyl Phthalate		ND< 343	U	ND< 399	U	ND< 341	U	ND< 387	U	ND< 349	U	ND< 362	U	ND< 339	U	ND< 395	U	ND< 338	U	ND< 379	U	ND< 326	U	ND< 404	U	ND< 340	U	ND< 346	U
Di-N-Octylphthalate		ND< 343	U	ND< 399	U	ND< 341	U	ND< 387	U	ND< 349	U	ND< 362	U	ND< 339	U	ND< 395	U	ND< 338	U	ND< 379	U	ND< 326	U	ND< 404	U	ND< 340	U	ND< 346	U
Fluoranthene	100000	ND< 343	U	ND< 399	U	ND< 341	U	ND< 387	U	ND< 349	U	ND< 362	U	ND< 339	U	1050		769		801		ND< 326	U	4100		463		ND< 346	U
Fluorene	100000	ND< 343	U	ND< 399	U	ND< 341	U	ND< 387	U	ND< 349	U	ND< 362	U	ND< 339	U	ND< 395	U	ND< 338	U	ND< 379	U	ND< 326	U	ND< 404	U	ND< 340	U	ND< 346	U
Hexachlorobenzene	**1200**	ND< 343	U	ND< 399	U	ND< 341	U	ND< 387	U	ND< 349	U	ND< 362	U	ND< 339	U	ND< 395	U	ND< 338	U	ND< 379	U	ND< 326	U	ND< 404	U	ND< 340	U	ND< 346	U
Hexachlorobutadiene		ND< 343	U	ND< 399	U	ND< 341	U	ND< 387	U	ND< 349	U	ND< 362	U	ND< 339	U	ND< 395	U	ND< 338	U	ND< 379	U	ND< 326	U	ND< 404	U	ND< 340	U	ND< 346	U
Hexachlorocyclopentadiene		ND< 343	U	ND< 399	U	ND< 341	U	ND< 387	U	ND< 349	U	ND< 362	U	ND< 339	U	ND< 395	U	ND< 338	U	ND< 379	U	ND< 326	U	ND< 404	U	ND< 340	U	ND< 346	U
Hexachloroethane		ND< 343	U	ND< 399	U	ND< 341	U	ND< 387	U	ND< 349	U	ND< 362	U	ND< 339	U	ND< 395	U	ND< 338	U	ND< 379	U	ND< 326	U	ND< 404	U	ND< 340	U	ND< 346	U
Indeno(1,2,3-C,D)Pyrene	**500**	ND< 343	U	ND< 399	U	ND< 341	U	ND< 387	U	ND< 349	U	ND< 362	U	ND< 339	U	451		248	J	259	J	ND< 326	U	**2530**		227	J	ND< 346	U
Isophorone		ND< 343	U	ND< 399	U	ND< 341	U	ND< 387	U	ND< 349	U	ND< 362	U	ND< 339	U	ND< 395	U	ND< 338	U	ND< 379	U	ND< 326	U	ND< 404	U	ND< 340	U	ND< 346	U
Naphthalene	100000	ND< 343	U	ND< 399	U	ND< 341	U	ND< 387	U	ND< 349	U	ND< 362	U	ND< 339	U	ND< 395	U	ND< 338	U	ND< 379	U	ND< 326	U	ND< 404	U	ND< 340	U	ND< 346	U
Nitrobenzene		ND< 343	U	ND< 399	U	ND< 341	U	ND< 387	U	ND< 349	U	ND< 362	U	ND< 339	U	ND< 395	U	ND< 338	U	ND< 379	U	ND< 326	U	ND< 404	U	ND< 340	U	ND< 346	U
N-Nitrosodi-N-Propylamine		ND< 343	U	ND< 399	U	ND< 341	U	ND< 387	U	ND< 349	U	ND< 362	U	ND< 339	U	ND< 395	U	ND< 338	U	ND< 379	U	ND< 326	U	ND< 404	U	ND< 340	U	ND< 346	U
N-Nitrosodiphenylamine		ND< 343	U	ND< 399	U	ND< 341	U	ND< 387	U	ND< 349	U	ND< 362	U	ND< 339	U	ND< 395	U	ND< 338	U	ND< 379	U	ND< 326	U	ND< 404	U	ND< 340	U	ND< 346	U
Pentachlorophenol	6700	ND< 685	U	ND< 798	U	ND< 682	U	ND< 773	U	ND< 698	U	ND< 723	U	ND< 678	U	ND< 790	U	ND< 677	U	ND< 759	U	ND< 652	U	ND< 807	U	ND< 680	U	ND< 692	U
Phenanthrene	100000	ND< 343	U	ND< 399	U	ND< 341	U	ND< 387	U	ND< 349	U	ND< 362	U	ND< 339	U	443		352		378	J	ND< 326	U	1790		233	J	ND< 346	U
Phenol	100000	ND< 343	U	ND< 399	U	ND< 341	U	ND< 387	U	ND< 349	U	ND< 362	U	ND< 339	U	ND< 395	U	ND< 338	U	ND< 379	U	ND< 326	U	ND< 404	U	ND< 340	U	ND< 346	U
Pyrene	100000	ND< 343	U	ND< 399	U	ND< 341	U	ND< 387	U	ND< 349	U	ND< 362	U	ND< 339	U	983		734		752		ND< 326	U	4130		477		ND< 346	U

NOTES:

1. Soil sample analytical results are compared to the New York State Department of Environmental Conservation (NYSDEC) Title 6 of the official compilation of New York Codes, Rules, and Regulations (NYCRR) Part 375 Restricted Residential Soil Cleanup Objectives (RRSCOs).
2. RRSCO exceedances are in bold and highlighted yellow.
3. ND = Not Detected
4. Results shown as "ND" with Reporting Limits exceeding RRSCOs are in bold.
5. SVOCs = Semi-Volatile Organic Compounds
6. µg/kg = micrograms per kilogram.
7. Qualifier (Q) definitions are provided in the official lab reports.

TABLE 9B: Semi-Volatile Organic Compounds (SVOCs) in Soil
Surface soil samples collected outside of AOCs
Soil Sample Results (non-QA/QC)
Hudson River Psychiatric Center - North BCP Site, Poughkeepsie, NY
PVE Sheffler File #560909

	Date Sampled	12/15/2014		11/24/2014		12/15/2014		11/25/2014		12/15/2014		11/25/2014		12/15/2014		11/25/2014		12/15/2014		11/25/2014		12/15/2014	
	Location	SS-22		SS-23		SS-23		SS-24		SS-24		SS-25		SS-25		SS-26		SS-26		SS-27		SS-27	
	Sample ID	SS-22 2-24"		SS-23 (0-2")		SS-23 2-24"		SS-24 (0-2")		SS-24 2-24"		SS-25 (0-2")		SS-25 2-24"		SS-26 (0-2")		SS-26 2-24"		SS-27 (0-2")		SS-27 2-24"	
Analyte	RRSCOs	Result	Q	Result	Q	Result	Q	Result	Q	Result	Q	Result	Q	Result	Q	Result	Q	Result	Q	Result	Q	Result	Q
SVOCs (µg/kg)																							
1,2,4,5-Tetrachlorobenzene		ND< 325	U	ND< 337	U	ND< 321	U	ND< 354	U	ND< 331	U	ND< 393	U	ND< 315	U	ND< 391	U	ND< 344	U	ND< 414	U	ND< 354	U
1,2,4-Trichlorobenzene		ND< 325	U	ND< 337	U	ND< 321	U	ND< 354	U	ND< 331	U	ND< 393	U	ND< 315	U	ND< 391	U	ND< 344	U	ND< 414	U	ND< 354	U
1,2-Dichlorobenzene	100000	ND< 325	U	ND< 337	U	ND< 321	U	ND< 354	U	ND< 331	U	ND< 393	U	ND< 315	U	ND< 391	U	ND< 344	U	ND< 414	U	ND< 354	U
1,3-Dichlorobenzene	49000	ND< 325	U	ND< 337	U	ND< 321	U	ND< 354	U	ND< 331	U	ND< 393	U	ND< 315	U	ND< 391	U	ND< 344	U	ND< 414	U	ND< 354	U
1,4-Dichlorobenzene	13000	ND< 325	U	ND< 337	U	ND< 321	U	ND< 354	U	ND< 331	U	ND< 393	U	ND< 315	U	ND< 391	U	ND< 344	U	ND< 414	U	ND< 354	U
2,2-Oxybis(2-Chloropropane)		ND< 325	U	ND< 337	U	ND< 321	U	ND< 354	U	ND< 331	U	ND< 393	U	ND< 315	U	ND< 391	U	ND< 344	U	ND< 414	U	ND< 354	U
2,3,4,6-Tetrachlorophenol		ND< 325	U	ND< 337	U	ND< 321	U	ND< 354	U	ND< 331	U	ND< 393	U	ND< 315	U	ND< 391	U	ND< 344	U	ND< 414	U	ND< 354	U
2,4,5-Trichlorophenol		ND< 650	U	ND< 674	U	ND< 641	U	ND< 708	U	ND< 662	U	ND< 786	U	ND< 629	U	ND< 783	U	ND< 687	U	ND< 828	U	ND< 707	U
2,4,6-Trichlorophenol		ND< 325	U	ND< 337	U	ND< 321	U	ND< 354	U	ND< 331	U	ND< 393	U	ND< 315	U	ND< 391	U	ND< 344	U	ND< 414	U	ND< 354	U
2,4-Dichlorophenol		ND< 325	U	ND< 337	U	ND< 321	U	ND< 354	U	ND< 331	U	ND< 393	U	ND< 315	U	ND< 391	U	ND< 344	U	ND< 414	U	ND< 354	U
2,4-Dimethylphenol		ND< 325	U	ND< 337	U	ND< 321	U	ND< 354	U	ND< 331	U	ND< 393	U	ND< 315	U	ND< 391	U	ND< 344	U	ND< 414	U	ND< 354	U
2,4-Dinitrophenol		ND< 650	U	ND< 674	U	ND< 641	U	ND< 708	U	ND< 662	U	ND< 786	U	ND< 629	U	ND< 783	U	ND< 687	U	ND< 828	U	ND< 707	U
2,4-Dinitrotoluene		ND< 325	U	ND< 337	U	ND< 321	U	ND< 354	U	ND< 331	U	ND< 393	U	ND< 315	U	ND< 391	U	ND< 344	U	ND< 414	U	ND< 354	U
2,6-Dinitrotoluene		ND< 325	U	ND< 337	U	ND< 321	U	ND< 354	U	ND< 331	U	ND< 393	U	ND< 315	U	ND< 391	U	ND< 344	U	ND< 414	U	ND< 354	U
2-Chloronaphthalene		ND< 325	U	ND< 337	U	ND< 321	U	ND< 354	U	ND< 331	U	ND< 393	U	ND< 315	U	ND< 391	U	ND< 344	U	ND< 414	U	ND< 354	U
2-Chlorophenol		ND< 325	U	ND< 337	U	ND< 321	U	ND< 354	U	ND< 331	U	ND< 393	U	ND< 315	U	ND< 391	U	ND< 344	U	ND< 414	U	ND< 354	U
2-Methylnaphthalene		ND< 325	U	ND< 337	U	ND< 321	U	ND< 354	U	ND< 331	U	ND< 393	U	ND< 315	U	ND< 391	U	ND< 344	U	ND< 414	U	ND< 354	U
2-Methylphenol (O-Cresol)	100000	ND< 325	U	ND< 337	U	ND< 321	U	ND< 354	U	ND< 331	U	ND< 393	U	ND< 315	U	ND< 391	U	ND< 344	U	ND< 414	U	ND< 354	U
2-Nitroaniline		ND< 650	U	ND< 674	U	ND< 641	U	ND< 708	U	ND< 662	U	ND< 786	U	ND< 629	U	ND< 783	U	ND< 687	U	ND< 828	U	ND< 707	U
2-Nitrophenol		ND< 325	U	ND< 337	U	ND< 321	U	ND< 354	U	ND< 331	U	ND< 393	U	ND< 315	U	ND< 391	U	ND< 344	U	ND< 414	U	ND< 354	U
3,3'-Dichlorobenzidine		ND< 325	U	ND< 337	U	ND< 321	U	ND< 354	U	ND< 331	U	ND< 393	U	ND< 315	U	ND< 391	U	ND< 344	U	ND< 414	U	ND< 354	U
3-Methylphenol	100000	ND< 325	U	ND< 337	U	ND< 321	U	ND< 354	U	ND< 331	U	ND< 393	U	ND< 315	U	ND< 391	U	ND< 344	U	ND< 414	U	ND< 354	U
3-Nitroaniline		ND< 650	U	ND< 674	U	ND< 641	U	ND< 708	U	ND< 662	U	ND< 786	U	ND< 629	U	ND< 783	U	ND< 687	U	ND< 828	U	ND< 707	U
4,6-Dinitro-2-Methylphenol		ND< 650	U	ND< 674	U	ND< 641	U	ND< 708	U	ND< 662	U	ND< 786	U	ND< 629	U	ND< 783	U	ND< 687	U	ND< 828	U	ND< 707	U
4-Bromophenyl Phenyl Ether		ND< 325	U	ND< 337	U	ND< 321	U	ND< 354	U	ND< 331	U	ND< 393	U	ND< 315	U	ND< 391	U	ND< 344	U	ND< 414	U	ND< 354	U
4-Chloro-3-Methylphenol		ND< 325	U	ND< 337	U	ND< 321	U	ND< 354	U	ND< 331	U	ND< 393	U	ND< 315	U	ND< 391	U	ND< 344	U	ND< 414	U	ND< 354	U
4-Chloroaniline		ND< 325	U	ND< 337	U	ND< 321	U	ND< 354	U	ND< 331	U	ND< 393	U	ND< 315	U	ND< 391	U	ND< 344	U	ND< 414	U	ND< 354	U
4-Chlorophenyl Phenyl Ether		ND< 325	U	ND< 337	U	ND< 321	U	ND< 354	U	ND< 331	U	ND< 393	U	ND< 315	U	ND< 391	U	ND< 344	U	ND< 414	U	ND< 354	U
4-Nitroaniline		ND< 650	U	ND< 674	U	ND< 641	U	ND< 708	U	ND< 662	U	ND< 786	U	ND< 629	U	ND< 783	U	ND< 687	U	ND< 828	U	ND< 707	U
4-Nitrophenol		ND< 650	U	ND< 674	U	ND< 641	U	ND< 708	U	ND< 662	U	ND< 786	U	ND< 629	U	ND< 783	U	ND< 687	U	ND< 828	U	ND< 707	U
Acenaphthene	100000	ND< 325	U	ND< 337	U	ND< 321	U	ND< 354	U	ND< 331	U	ND< 393	U	ND< 315	U	ND< 391	U	ND< 344	U	ND< 414	U	ND< 354	U
Acenaphthylene	100000	ND< 325	U	ND< 337	U	ND< 321	U	ND< 354	U	ND< 331	U	ND< 393	U	ND< 315	U	ND< 391	U	ND< 344	U	250	J	ND< 354	U
Acetophenone		ND< 325	U	ND< 337	U	ND< 321	U	ND< 354	U	ND< 331	U	ND< 393	U	ND< 315	U	ND< 391	U	ND< 344	U	ND< 414	U	ND< 354	U
Anthracene	100000	ND< 325	U	ND< 337	U	ND< 321	U	ND< 354	U	ND< 331	U	ND< 393	U	ND< 315	U	ND< 391	U	ND< 344	U	ND< 414	U	ND< 354	U
Atrazine		ND< 325	U	ND< 337	U	ND< 321	U	ND< 354	U	ND< 331	U	ND< 393	U	ND< 315	U	ND< 391	U	ND< 344	U	ND< 414	U	ND< 354	U
Benzaldehyde		ND< 325	U	ND< 337	U	ND< 321	U	ND< 354	U	ND< 331	U	ND< 393	U	ND< 315	U	ND< 391	U	ND< 344	U	ND< 414	U	ND< 354	U
Benzo(A)Anthracene	**1000**	ND< 325	U	181	J	ND< 321	U	278	J	284	J	ND< 393	U	ND< 315	U	334	J	ND< 344	U	475		ND< 354	U
Benzo(A)Pyrene	**1000**	ND< 325	U	186	J	ND< 321	U	252	J	267	J	ND< 393	U	ND< 315	U	340	J	ND< 344	U	484		ND< 354	U
Benzo(B)Fluoranthene	**1000**	ND< 325	U	180	J	ND< 321	U	242	J	317	J	ND< 393	U	ND< 315	U	341	J	ND< 344	U	462		ND< 354	U
Benzo(G,H,I)Perylene	100000	ND< 325	U	ND< 337	U	ND< 321	U	ND< 354	U	174	J	ND< 393	U	ND< 315	U	240	J	ND< 344	U	350	J	ND< 354	U
Benzo(K)Fluoranthene	3900	ND< 325	U	ND< 337	U	ND< 321	U	237	J	189	J	ND< 393	U	ND< 315	U	252	J	ND< 344	U	395	J	ND< 354	U
Benzyl Butyl Phthalate		ND< 325	U	ND< 337	U	ND< 321	U	ND< 354	U	ND< 331	U	ND< 393	U	ND< 315	U	ND< 391	U	ND< 344	U	ND< 414	U	ND< 354	U
Biphenyl (Diphenyl)		ND< 325	U	ND< 337	U	ND< 321	U	ND< 354	U	ND< 331	U	ND< 393	U	ND< 315	U	ND< 391	U	ND< 344	U	ND< 414	U	ND< 354	U
Bis(2-Chloroethoxy) Methane		ND< 325	U	ND< 337	U	ND< 321	U	ND< 354	U	ND< 331	U	ND< 393	U	ND< 315	U	ND< 391	U	ND< 344	U	ND< 414	U	ND< 354	U
Bis(2-Chloroethyl) Ether (2-Chloroethyl Ether)		ND< 325	U	ND< 337	U	ND< 321	U	ND< 354	U	ND< 331	U	ND< 393	U	ND< 315	U	ND< 391	U	ND< 344	U	ND< 414	U	ND< 354	U
Bis(2-Ethylhexyl) Phthalate		ND< 325	U	ND< 337	U	ND< 321	U	ND< 354	U	ND< 331	U	ND< 393	U	ND< 315	U	ND< 391	U	ND< 344	U	ND< 414	U	ND< 354	U
Caprolactam		ND< 325	U	ND< 337	U	ND< 321	U	ND< 354	U	ND< 331	U	ND< 393	U	ND< 315	U	ND< 391	U	ND< 344	U	ND< 414	U	ND< 354	U
Carbazole		ND< 325	U	ND< 337	U	ND< 321	U	ND< 354	U	ND< 331	U	ND< 393	U	ND< 315	U	ND< 391	U	ND< 344	U	ND< 414	U	ND< 354	U
Chrysene	3900	ND< 325	U	207	J	ND< 321	U	295	J	323	J	ND< 393	U	ND< 315	U	446		ND< 344	U	513		ND< 354	U
Dibenz(A,H)Anthracene	**330**	ND< 325	U	**ND< 337**	**U**	ND< 321	U	**ND< 354**	**U**	**ND< 331**	**U**	**ND< 393**	**U**	ND< 315	U	**ND< 391**	**U**	**ND< 344**	**U**	**ND< 414**	**U**	**ND< 354**	**U**
Dibenzofuran	59000	ND< 325	U	ND< 337	U	ND< 321	U	ND< 354	U	ND< 331	U	ND< 393	U	ND< 315	U	ND< 391	U	ND< 344	U	ND< 414	U	ND< 354	U
Diethyl Phthalate		ND< 325	U	ND< 337	U	ND< 321	U	ND< 354	U	ND< 331	U	ND< 393	U	ND< 315	U	ND< 391	U	ND< 344	U	ND< 414	U	ND< 354	U
Dimethyl Phthalate		ND< 650	U	ND< 674	U	ND< 641	U	ND< 708	U	ND< 662	U	ND< 786	U	ND< 629	U	ND< 783	U	ND< 687	U	ND< 828	U	ND< 707	U
Di-N-Butyl Phthalate		ND< 325	U	ND< 337	U	ND< 321	U	ND< 354	U	ND< 331	U	ND< 393	U	ND< 315	U	ND< 391	U	ND< 344	U	ND< 414	U	ND< 354	U
Di-N-Octylphthalate		ND< 325	U	ND< 337	U	ND< 321	U	ND< 354	U	ND< 331	U	ND< 393	U	ND< 315	U	ND< 391	U	ND< 344	U	ND< 414	U	ND< 354	U
Fluoranthene	100000	ND< 325	U	295	J	176	J	407		474		291	J	ND< 315	U	644		ND< 344	U	814		ND< 354	U
Fluorene	100000	ND< 325	U	ND< 337	U	ND< 321	U	ND< 354	U	ND< 331	U	ND< 393	U	ND< 315	U	ND< 391	U	ND< 344	U	ND< 414	U	ND< 354	U
Hexachlorobenzene	**1200**	ND< 325	U	ND< 337	U	ND< 321	U	ND< 354	U	ND< 331	U	ND< 393	U	ND< 315	U	ND< 391	U	ND< 344	U	ND< 414	U	ND< 354	U
Hexachlorobutadiene		ND< 325	U	ND< 337	U	ND< 321	U	ND< 354	U	ND< 331	U	ND< 393	U	ND< 315	U	ND< 391	U	ND< 344	U	ND< 414	U	ND< 354	U
Hexachlorocyclopentadiene		ND< 325	U	ND< 337	U	ND< 321	U	ND< 354	U	ND< 331	U	ND< 393	U	ND< 315	U	ND< 391	U	ND< 344	U	ND< 414	U	ND< 354	U
Hexachloroethane		ND< 325	U	ND< 337	U	ND< 321	U	ND< 354	U	ND< 331	U	ND< 393	U	ND< 315	U	ND< 391	U	ND< 344	U	ND< 414	U	ND< 354	U
Indeno(1,2,3-C,D)Pyrene	**500**	ND< 325	U	ND< 337	U	ND< 321	U	199	J	227	J	ND< 393	U	ND< 315	U	283	J	ND< 344	U	379	J	ND< 354	U
Isophorone		ND< 325	U	ND< 337	U	ND< 321	U	ND< 354	U	ND< 331	U	ND< 393	U	ND< 315	U	ND< 391	U	ND< 344	U	ND< 414	U	ND< 354	U
Naphthalene	100000	ND< 325	U	ND< 337	U	ND< 321	U	ND< 354	U	ND< 331	U	ND< 393	U	ND< 315	U	ND< 391	U	ND< 344	U	ND< 414	U	ND< 354	U
Nitrobenzene		ND< 325	U	ND< 337	U	ND< 321	U	ND< 354	U	ND< 331	U	ND< 393	U	ND< 315	U	ND< 391	U	ND< 344	U	ND< 414	U	ND< 354	U
N-Nitrosodi-N-Propylamine		ND< 325	U	ND< 337	U	ND< 321	U	ND< 354	U	ND< 331	U	ND< 393	U	ND< 315	U	ND< 391	U	ND< 344	U	ND< 414	U	ND< 354	U
N-Nitrosodiphenylamine		ND< 325	U	ND< 337	U	ND< 321	U	ND< 354	U	ND< 331	U	ND< 393	U	ND< 315	U	ND< 391	U	ND< 344	U	ND< 414	U	ND< 354	U
Pentachlorophenol	6700	ND< 650	U	ND< 674	U	ND< 641	U	ND< 708	U	ND< 662	U	ND< 786	U	ND< 629	U	ND< 783	U	ND< 687	U	ND< 828	U	ND< 707	U
Phenanthrene	100000	ND< 325	U	ND< 337	U	ND< 321	U	ND< 354	U	176	J	ND< 393	U	ND< 315	U	357	J	ND< 344	U	261	J	ND< 354	U
Phenol	100000	ND< 325	U	ND< 337	U	ND< 321	U	ND< 354	U	ND< 331	U	ND< 393	U	ND< 315	U	ND< 391	U	ND< 344	U	ND< 414	U	ND< 354	U
Pyrene	100000	ND< 325	U	282	J	162	J	378		456		266	J	ND< 315	U	690		ND< 344	U	867		ND< 354	U

NOTES:

1. Soil sample analytical results are compared to the New York State Department of Environmental Conservation (NYSDEC) Title 6 of the official compilation of New York Codes, Rules, and Regulations (NYCRR) Part 375 Restricted Residential Soil Cleanup Objectives (RRSCOs).
2. RRSCO exceedances are in bold and highlighted yellow.
3. ND = Not Detected
4. Results shown as "ND" with Reporting Limits exceeding RRSCOs are in bold.
5. SVOCs = Semi-Volatile Organic Compounds
6. µg/kg = micrograms per kilogram.
7. Qualifier (Q) definitions are provided in the official lab reports.

Table 9C – Total Metals in Soil – Surface Samples Outside AOCs

TABLE 9C: Total Metals in Soil

Surface soil samples collected outside of AOCs

Soil Sample Results (non-QA/QC)

Hudson River Psychiatric Center - North BCP Site, Poughkeepsie, NY

PVE Sheffler File #560909

	Date Sampled	5/5/2014		5/5/2014		5/5/2014		5/5/2014		5/5/2014		5/5/2014		5/5/2014		5/5/2014	
	Location	SS-1		SS-1		SS-2		SS-2		SS-3		SS-3		SS-4		SS-4	
	Sample ID	SS-1 0-2"		SS-1 12-18"		SS-2 0-2"		SS-2 12-16"		SS-3 0-2"		SS-3 12-20"		SS-4 0-2"		SS-4 12-17"	
Analyte	RRSCOs	Result	Q	Result	Q	Result	Q	Result	Q	Result	Q	Result	Q	Result	Q	Result	Q
Metals (mg/kg)																	
Aluminum		13200		12700		12900		16600		14400		15300		13000		12400	
Antimony		ND< 7.78	U	ND< 7.40	U	ND< 7.63	U	ND< 6.71	U	ND< 8.34	U	ND< 7.19	U	ND< 8.13	U	ND< 6.86	U
Arsenic	**16**	8.75		13.4		8.20		**16.8**		8.96		7.21		7.90		**46.8**	
Barium	400	63.9		57.2		58.8		49.2		69.7		57.9		51.0		30.3	
Beryllium	72	0.495	J	0.652		0.530	J	0.546	J	0.583	J	0.583	J	0.523	J	0.525	J
Cadmium	**4.3**	ND< 0.648	U	0.387	J	0.420	J	0.848		ND< 0.695	U	ND< 0.599	U	0.582	J	ND< 0.571	U
Calcium		29700		2940		9300		1590		9970		3860		4230		25000	
Chromium, Hexavalent	110																
Chromium, Hexavalent	110	ND< 1.3	U	ND< 1.2	U	ND< 1.3	U	ND< 1.1	U	ND< 1.2	U	ND< 1.2	U	ND< 1.3	U	ND< 1.1	U
Chromium, Total		14.9		15.3		17.3		21.1		17.5		17.2		18.1		14.2	
Cobalt		9.50		15.4		10.7		23.4		11.0		10.5		9.42		11.3	
Copper	270	27.0		66.2		31.4		70.0		29.6		28.6		54.7		81.9	
Cyanide	27	ND< 0.64	U	ND< 0.58	U	0.710		ND< 0.55	U	ND< 0.62	U	ND< 0.58	U	ND< 0.66	U	ND< 0.55	U
Cyanide	27																
Iron		23100		27500		25300		34000		24800		25400		24200		27100	
Lead	400	60.7		57.0		69.3		51.9		74.2		196		125		27.0	
Magnesium		19700		5680		8780		8900		9030		7010		5360		5880	
Manganese	**2000**	910		648		991		**2140**		911		752		679		510	
Mercury	**0.81**	0.0719		0.0581		0.0639		0.0688		0.138		0.135		0.444		0.0348	
Nickel	310	25.1		30.8		31.5		49.2		25.4		23.7		27.9		23.0	
Potassium		1300		1030		1090		977		1520		1080		982		740	
Selenium	180	ND< 1.30	U	ND< 2.47	U	ND< 2.54	U	ND< 3.35	U	ND< 1.39	U	ND< 2.40	U	ND< 1.35	U	ND< 3.43	U
Silver	180	ND< 1.30	U	ND< 1.23	U	ND< 1.27	U	ND< 1.12	U	ND< 1.39	U	ND< 1.20	U	ND< 1.35	U	ND< 1.14	U
Sodium		ND< 324	U	ND< 308	U	ND< 318	U	ND< 279	U	ND< 348	U	ND< 299	U	ND< 339	U	ND< 286	U
Thallium		ND< 3.24	U	ND< 3.08	U	ND< 3.18	U	ND< 2.79	U	ND< 3.48	U	ND< 2.99	U	ND< 3.39	U	ND< 2.86	U
Vanadium		28.8		18.3		33.2		22.4		27.6		21.2		31.3		13.7	
Zinc	10000	102		106		112		244		108		100		156		72.8	

NOTES:

1. Soil sample analytical results are compared to the New York State Department of Environmental Conservation (NYSDEC) Title 6 of the official compilation of New York Codes, Rules, and Regulations (NYCRR) Part 375 Restricted Residential Soil Cleanup Objectives (RRSCOs).
2. RRSCO exceedances are in bold and highlighted yellow.
3. ND = Not Detected
4. Results shown as "ND" with Reporting Limits exceeding RRSCOs are in bold.
5. mg/kg = milligrams per kilogram.
6. Qualifier (Q) definitions are provided in the official lab reports.

TABLE 9C: Total Metals in Soil

Surface soil samples collected outside of AOCs

Soil Sample Results (non-QA/QC)

Hudson River Psychiatric Center - North BCP Site, Poughkeepsie, NY

PVE Sheffler File #560909

	Date Sampled	5/5/2014		5/5/2014		5/5/2014		5/15/2014		5/15/2014		5/2/2014		5/2/2014		5/2/2014	
	Location	SS-5		SS-5		SS-6		SS-6B		SS-6B		SS-7		SS-7		SS-8	
	Sample ID	SS-5 0-2"		SS-5 12-20"		SS-6 0-2"		SS-6B 0-2"		SS-6B 12-24"		SS-7 0-2"		SS-7 12-20"		SS-8 0-2"	
Analyte	RRSCOs	Result	Q	Result	Q	Result	Q	Result	Q	Result	Q	Result	Q	Result	Q	Result	Q
Metals (mg/kg)																	
Aluminum		13100		8070		13400		16300		13700		13700		16200		14500	
Antimony		ND< 7.88	U	ND< 7.93	U	ND< 8.03	U	ND< 7.92	U	ND< 7.44	U	ND< 7.42	U	ND< 6.55	U	ND< 7.81	U
Arsenic	**16**	8.16	D	**28.0**		6.06		8.40		7.14		11.5		5.60		9.52	
Barium	400	63.0		41.0		76.0		68.1		38.5		56.9		64.9		43.2	
Beryllium	72	0.538	J	0.395	J	0.585	J	0.674		0.482	J	0.549	J	0.558		0.546	J
Cadmium	**4.3**	0.391	J	ND< 0.661	U	0.367	J	ND< 0.660	U	ND< 0.620	U	0.413	J	ND< 0.546	U	ND< 0.651	U
Calcium		1880		2080		2880		1570		803		2100		947		420	
Chromium, Hexavalent	110																
Chromium, Hexavalent	110	ND< 1.2	U	ND< 1.2	U			ND< 1.3	U	ND< 1.1	U	ND< 1.2	U	ND< 1.1	U	ND< 1.3	U
Chromium, Total		16.4		10.8		15.1		16.4		15.4		15.8		15.5		16.7	
Cobalt		9.74		9.03		9.12		10.6		9.20		9.17		9.13		11.6	
Copper	270	41.2	D	30.2		21.9		24.3		26.3		25.4		22.2		37.9	
Cyanide	27	ND< 0.59	U	ND< 0.59	U			ND< 0.63	U	ND< 0.57	U	ND< 0.60	U	ND< 0.56	U	0.660	
Cyanide	27																
Iron		23200		28600		21100		25800		24000		23700		23400		24500	
Lead	400	86.8		129		69.6		84.1		43.4		54.0		12.4		52.8	
Magnesium		4440	M	3020		5010		5130		5020		4980		4720		5050	
Manganese	**2000**	621		486		949		932		574		617		575		670	
Mercury	**0.81**	0.110	M	0.0733				0.0998		0.0698		0.116		0.0531		0.0740	
Nickel	310	25.6		19.4		21.8		23.6		20.5		24.7		20.7		26.2	
Potassium		1320	D	711		1040		1190		987		1010		912		966	
Selenium	180	ND< 1.31	U	1.76	B	ND< 1.34	U	0.833	J	ND< 1.24	U	ND< 1.24	U	ND< 1.09	U	ND< 1.30	U
Silver	180	ND< 1.31	U	ND< 1.32	U	ND< 1.34	U	ND< 1.32	U	ND< 1.24	U	ND< 1.24	U	ND< 1.09	U	ND< 1.30	U
Sodium		ND< 328	U	ND< 330	U	ND< 335	U	ND< 330	U	ND< 310	U	ND< 309	U	ND< 273	U	ND< 325	U
Thallium		ND< 3.28	U	ND< 3.30	U	ND< 3.35	U	ND< 3.30	U	ND< 3.10	U	ND< 3.09	U	ND< 2.73	U	ND< 3.25	U
Vanadium		28.1		13.3		25.3		28.0		17.6		25.1		20.1		31.1	
Zinc	10000	100		52.1		75.7		93.8		78.5		86.5		74.2		93.0	

NOTES:

1. Soil sample analytical results are compared to the New York State Department of Environmental Conservation (NYSDEC) Title 6 of the official compilation of New York Codes, Rules, and Regulations (NYCRR) Part 375 Restricted Residential Soil Cleanup Objectives (RRSCOs).
2. RRSCO exceedances are in bold and highlighted yellow.
3. ND = Not Detected
4. Results shown as "ND" with Reporting Limits exceeding RRSCOs are in bold.
5. mg/kg = milligrams per kilogram.
6. Qualifier (Q) definitions are provided in the official lab reports.

TABLE 9C: Total Metals in Soil

Surface soil samples collected outside of AOCs

Soil Sample Results (non-QA/QC)

Hudson River Psychiatric Center - North BCP Site, Poughkeepsie, NY

PVE Sheffler File #560909

	Date Sampled	5/2/2014		5/2/2014		5/2/2014		5/2/2014		5/2/2014		5/2/2014		5/2/2014		5/2/2014	
	Location	SS-8		SS-9		SS-9		SS-10		SS-10		SS-11		SS-11		SS-12	
	Sample ID	SS-8 12-22"		SS-9 0-2"		SS-9 12-15"		SS-10 0-2"		SS-10 12-20"		SS-11 0-2"		SS-11 12-19"		SS-12 0-2"	
Analyte	RRSCOs	Result	Q	Result	Q	Result	Q	Result	Q	Result	Q	Result	Q	Result	Q	Result	Q
Metals (mg/kg)																	
Aluminum		14500		12300		12900		14200		15600		8870		12200		13300	
Antimony		ND< 6.86	U	ND< 7.65	U	ND< 7.71	U	ND< 8.04	U	ND< 6.54	U	ND< 6.48	U	ND< 6.50	U	ND< 8.93	U
Arsenic	**16**	7.23		14.4		8.92		7.83		7.68		5.72		5.77		11.1	
Barium	400	37.8		65.5		79.1		59.0		42.4		39.6		43.1		61.0	
Beryllium	72	0.471	J	0.678		0.617	J	0.571	J	0.567		0.365	J	0.513	J	0.556	J
Cadmium	**4.3**	ND< 0.572	U	**6.11**		0.859		ND< 0.670	U	ND< 0.545	U	ND< 0.540	U	0.444	J	0.613	J
Calcium		220	J	2240		2920	M	916		476		52500		1780		3030	
Chromium, Hexavalent	110																
Chromium, Hexavalent	110	ND< 1.2	U	1.30		2.10		ND< 1.3	U	1.60		ND< 1.2	U	ND< 1.2	U	ND< 1.4	U
Chromium, Total		15.5		20.2		17.4		15.6		16.9		13.4		15.8		16.6	
Cobalt		12.0		12.8		10.7		10.3		12.6		7.13		11.8		10.8	
Copper	270	38.9		62.4		43.0		27.0		30.5		24.6		31.5		33.9	
Cyanide	27	ND< 0.61	U	ND< 0.65	U	ND< 0.62	U	ND< 0.67	U	ND< 0.59	U	ND< 0.58	U	ND< 0.59	U	ND< 0.68	U
Cyanide	27																
Iron		25600		146000		74900	D	23200		28900		17800		25900		21900	
Lead	400	23.9		106		104		79.0		20.5		142		37.3		74.8	
Magnesium		5380		5130		4870	DM	4430		6300		33900		5640		4010	
Manganese	**2000**	646		1180		892	M	706		844		822		**3540**		856	
Mercury	**0.81**	0.0413		0.212		0.267		0.0907		0.0367		0.0442		0.0428		0.148	
Nickel	310	24.5		27.5		23.5		22.9		26.3		20.4		26.3		34.9	
Potassium		856		974		929		887		771		861		685		941	
Selenium	180	ND< 3.43	U	ND< 25.5	U	ND< 12.8	U	ND< 1.34	U	ND< 5.45	U	ND< 2.16	U	ND< 3.25	U	ND< 1.49	U
Silver	180	ND< 1.14	U	ND< 12.8	U	ND< 12.8	U	ND< 1.34	U	ND< 5.45	U	ND< 1.08	U	ND< 1.08	U	ND< 1.49	U
Sodium		ND< 286	U	ND< 319	U	ND< 321	U	ND< 335	U	ND< 273	U	ND< 270	U	ND< 271	U	ND< 372	U
Thallium		ND< 2.86	U	ND< 3.19	U	ND< 3.21	U	ND< 3.35	U	ND< 2.73	U	ND< 2.70	U	ND< 2.71	U	ND< 3.72	U
Vanadium		16.9		31.7		25.6		24.0		19.1		21.1		16.4		44.2	
Zinc	10000	82.7		767		822	DM	101		86.2		99.7		79.2		167	

NOTES:

1. Soil sample analytical results are compared to the New York State Department of Environmental Conservation (NYSDEC) Title 6 of the official compilation of New York Codes, Rules, and Regulations (NYCRR) Part 375 Restricted Residential Soil Cleanup Objectives (RRSCOs).
2. RRSCO exceedances are in bold and highlighted yellow.
3. ND = Not Detected
4. Results shown as "ND" with Reporting Limits exceeding RRSCOs are in bold.
5. mg/kg = milligrams per kilogram.
6. Qualifier (Q) definitions are provided in the official lab reports.

TABLE 9C: Total Metals in Soil

Surface soil samples collected outside of AOCs

Soil Sample Results (non-QA/QC)

Hudson River Psychiatric Center - North BCP Site, Poughkeepsie, NY

PVE Sheffler File #560909

	Date Sampled	5/2/2014		5/2/2014		5/2/2014		5/2/2014		5/1/2014		5/1/2014		5/1/2014		5/1/2014	
	Location	SS-13		SS-13		SS-14		SS-14		SS-15		SS-15		SS-16		SS-16	
	Sample ID	SS-13 0-2"		SS-13 12-20"		SS-14 0-2"		SS-14 12-20"		SS-15 0-2"		SS-15 12-16"		SS-16 0-2"		SS-16 12-20"	
Analyte	RRSCOs	Result	Q	Result	Q	Result	Q	Result	Q	Result	Q	Result	Q	Result	Q	Result	Q
Metals (mg/kg)																	
Aluminum		14300		9480		12400		13400		15000		21600		17500		19300	
Antimony		ND< 8.11	U	ND< 6.80	U	ND< 8.34	U	ND< 6.77	U	ND< 7.75	U	ND< 7.05	U	ND< 8.55	U	ND< 7.66	U
Arsenic	**16**	5.90		6.56		5.73		4.29		7.87		5.91		9.71		11.5	
Barium	400	59.1		39.9		60.8		57.9		47.2		61.2		51.0		53.3	
Beryllium	72	0.567	J	0.514	J	0.567	J	0.617		0.569	J	0.728		0.696	J	0.688	
Cadmium	**4.3**	ND< 0.676	U	0.497	J	0.380	J	ND< 0.564	U	ND< 0.646	U	ND< 0.587	U	0.370	J	0.364	J
Calcium		5110		3620		23200		13000		468		270	J	241	J	ND< 319	U
Chromium, Hexavalent	110																
Chromium, Hexavalent	110	ND< 1.2	U	ND< 1.2	U	1.70	M	ND< 1.2	U	ND< 1.3	U	ND< 1.2	U	ND< 1.4	U	ND< 1.2	U
Chromium, Total		16.0		13.8		19.0		15.5		16.5		20.3		17.7		19.8	
Cobalt		9.84		9.50		7.94		8.60		10.3		11.6		11.0		14.5	
Copper	270	24.7		30.4		23.5		19.2		34.3		27.9		32.0		47.8	
Cyanide	27	ND< 0.60	U	ND< 0.58	U	ND< 0.66	U	ND< 0.60	U	0.910		ND< 0.61	U	ND< 0.70	U	ND< 0.63	U
Cyanide	27																
Iron		24000		18500		19100		20300		24700		29900		23100		31100	
Lead	400	33.6		112		66.1		96.6		67.9		17.3		40.0		18.3	
Magnesium		6090		4270		16300		4900		4820		5450	M	5470		6800	
Manganese	**2000**	813		530		920		882		638		493	M	792		869	
Mercury	**0.81**	0.0463		0.0749		0.0532		0.0296		0.0696		0.0415	D	0.0944		0.0321	
Nickel	310	23.8		24.3		22.5		20.3		23.2		26.7		22.4		28.1	
Potassium		943		687		1040		780		958		795		668		836	
Selenium	180	ND< 1.35	U	ND< 1.13	U	ND< 1.39	U	ND< 4.51	U	ND< 2.58	U	ND< 2.35	U	ND< 1.43	U	ND< 2.55	U
Silver	180	ND< 1.35	U	ND< 1.13	U	ND< 1.39	U	ND< 1.13	U	ND< 1.29	U	ND< 1.17	U	ND< 1.43	U	ND< 1.28	U
Sodium		ND< 338	U	ND< 283	U	ND< 347	U	ND< 282	U	ND< 323	U	ND< 294	U	ND< 356	U	ND< 319	U
Thallium		ND< 3.38	U	ND< 2.83	U	ND< 3.47	U	ND< 2.82	U	ND< 3.23	U	ND< 2.94	U	ND< 3.56	U	ND< 3.19	U
Vanadium		21.2		23.1		24.5		16.7		29.4		23.8		36.5		23.6	
Zinc	10000	84.2		90.8		102		72.1		90.8		92.3		112		190	

NOTES:

1. Soil sample analytical results are compared to the New York State Department of Environmental Conservation (NYSDEC) Title 6 of the official compilation of New York Codes, Rules, and Regulations (NYCRR) Part 375 Restricted Residential Soil Cleanup Objectives (RRSCOs).
2. RRSCO exceedances are in bold and highlighted yellow.
3. ND = Not Detected
4. Results shown as "ND" with Reporting Limits exceeding RRSCOs are in bold.
5. mg/kg = milligrams per kilogram.
6. Qualifier (Q) definitions are provided in the official lab reports.

TABLE 9C: Total Metals in Soil

Surface soil samples collected outside of AOCs

Soil Sample Results (non-QA/QC)

Hudson River Psychiatric Center - North BCP Site, Poughkeepsie, NY

PVE Sheffler File #560909

	Date Sampled	5/1/2014		5/1/2014		5/1/2014		5/1/2014		11/24/2014		12/15/2014		11/24/2014		12/15/2014	
	Location	SS-17		SS-17		SS-18		SS-18		SS-19		SS-19		SS-20		SS-20	
	Sample ID	SS-17 0-2"		SS-17 12-16"		SS-18 0-2"		SS-18 12-18"		SS-19 (0-2")		SS-19 2-24"		SS-20 (0-2")		SS-20 2-24"	
Analyte	RRSCOs	Result	Q	Result	Q	Result	Q	Result	Q	Result	Q	Result	Q	Result	Q	Result	Q
Metals (mg/kg)																	
Aluminum		13800		13500		14200		13600									
Antimony		ND< 8.42	U	ND< 7.23	U	ND< 8.06	U	ND< 7.04	U								
Arsenic	**16**	7.58		9.81		9.91		10.2		10.4		7.26		10.4		8.03	
Barium	400	47.4		25.5		36.5		39.5		60.9		47.6		44.1		27.5	
Beryllium	72	0.430	J	ND< 0.602	U	ND< 0.672	U	0.400	J	0.557	J	0.622	J	0.485	J	0.441	J
Cadmium	**4.3**	0.390	J	ND< 0.602	U	0.457	J	0.442	J	ND< 0.826	U	ND< 0.638	U	ND< 0.663	U	0.340	J
Calcium		3970		1620		1320		1460									
Chromium, Hexavalent	110									ND< 1.4	U			ND< 1.5	U		
Chromium, Hexavalent	110	ND< 1.3	U	ND< 1.1	U	ND< 1.2	U	ND< 1.2	U			ND< 1.2	U			ND< 1.2	U
Chromium, Total		15.8		12.2		14.1		18.4		14.1		12.8		16.5		15.9	
Cobalt		11.9		15.0		16.2		13.6									
Copper	270	35.2		38.7		43.0		37.1		24.3		43.5		34.8		41.7	
Cyanide	27	ND< 0.63	U	ND< 0.56	U	ND< 0.62	U	ND< 0.60	U								
Cyanide	27									ND< 0.604	U	ND< 0.523	U	ND< 0.636	U	ND< 0.507	U
Iron		25600		28900		29600		26500									
Lead	400	24.9		12.7		17.4		31.2		61.7		47.5		43.9		16.6	
Magnesium		6750		7680		7810		6760									
Manganese	**2000**	815		803		1300		824		541		464		565		578	
Mercury	**0.81**	0.0343		0.0194	J	0.0272		0.0374		0.0797		0.0446		0.0824		0.0418	
Nickel	310	24.4		30.0		32.6		27.9		24.3		23.9		23.3		24.3	
Potassium		952		759		1060		738									
Selenium	180	ND< 2.81	U	ND< 4.82	U	ND< 2.69	U	ND< 2.35	U	ND< 1.65	U	ND< 1.28	U	ND< 1.33	U	ND< 1.15	U
Silver	180	ND< 1.40	U	ND< 1.20	U	ND< 1.34	U	ND< 1.17	U	ND< 1.65	U	ND< 1.28	U	ND< 1.33	U	ND< 1.15	U
Sodium		ND< 351	U	ND< 301	U	ND< 336	U	ND< 293	U								
Thallium		ND< 3.51	U	ND< 3.01	U	ND< 3.36	U	ND< 2.93	U								
Vanadium		16.2		12.5		14.0		16.8									
Zinc	10000	81.1		75.9		79.0		76.9		72.0		43.2		84.2		74.6	

NOTES:

1. Soil sample analytical results are compared to the New York State Department of Environmental Conservation (NYSDEC) Title 6 of the official compilation of New York Codes, Rules, and Regulations (NYCRR) Part 375 Restricted Residential Soil Cleanup Objectives (RRSCOs).
2. RRSCO exceedances are in bold and highlighted yellow.
3. ND = Not Detected
4. Results shown as "ND" with Reporting Limits exceeding RRSCOs are in bold.
5. mg/kg = milligrams per kilogram.
6. Qualifier (Q) definitions are provided in the official lab reports.

TABLE 9C: Total Metals in Soil

Surface soil samples collected outside of AOCs

Soil Sample Results (non-QA/QC)

Hudson River Psychiatric Center - North BCP Site, Poughkeepsie, NY

PVE Sheffler File #560909

	Date Sampled	11/24/2014		12/15/2014		11/24/2014		12/15/2014		11/24/2014		12/15/2014		11/25/2014		12/15/2014	
	Location	SS-21		SS-21		SS-22		SS-22		SS-23		SS-23		SS-24		SS-24	
	Sample ID	SS-21 (0-2")		SS-21 2-24"		SS-22 (0-2")		SS-22 2-24"		SS-23 (0-2")		SS-23 2-24"		SS-24 (0-2")		SS-24 2-24"	
Analyte	RRSCOs	Result	Q	Result	Q	Result	Q	Result	Q	Result	Q	Result	Q	Result	Q	Result	Q
Metals (mg/kg)																	
Aluminum																	
Antimony																	
Arsenic	**16**	10.1		11.9		10.9		4.61		6.34		7.90		6.67		5.32	
Barium	400	62.0		52.6		48.6		59.3		53.3		45.2		87.4		64.8	
Beryllium	72	0.634	J	0.582		0.478	J	0.535	J	0.484	J	0.586	J	0.601	J	0.559	
Cadmium	**4.3**	0.556	J	0.647		ND< 0.573	U	ND< 0.629	U	ND< 0.553	U	0.429	J	ND< 0.640	U	0.298	J
Calcium																	
Chromium, Hexavalent	110	ND< 1.4	U			ND< 1.2	U			ND< 1.2	U						
Chromium, Hexavalent	110			ND< 1.2	U			ND< 1.2	U			ND< 1.2	U	ND< 1.3	U	ND< 1.2	U
Chromium, Total		19.4		17.9		16.9		16.6		15.3		17.6		18.1		16.1	
Cobalt																	
Copper	270	41.8		38.1		24.0		20.6		31.2		39.2		25.6		27.1	
Cyanide	27																
Cyanide	27	ND< 0.641	U	ND< 0.564	U	ND< 0.486	U	ND< 0.416	U	ND< 0.536	U	0.208	J	ND< 0.547	U	ND< 0.373	U
Iron																	
Lead	400	108		53.5		83.2		13.6		98.1		42.3		84.1		62.5	
Magnesium																	
Manganese	**2000**	742		1790		243		516		561		886		1060		808	
Mercury	**0.81**	0.0955		0.0761		0.115		0.0297		0.146		0.0803		0.133		0.0915	
Nickel	310	31.0		35.3		19.3		21.5		21.8		27.9		22.8		23.3	
Potassium																	
Selenium	180	ND< 1.36	U	ND< 1.13	U	ND< 1.15	U	ND< 1.26	U	ND< 1.11	U	ND< 1.20	U	ND< 1.28	U	ND< 1.08	U
Silver	180	ND< 1.36	U	ND< 1.13	U	ND< 1.15	U	ND< 1.26	U	ND< 1.11	U	ND< 1.20	U	ND< 1.28	U	ND< 1.08	U
Sodium																	
Thallium																	
Vanadium																	
Zinc	10000	121		102		61.7		63.3		101		88.6		95.5		82.4	

NOTES:

1. Soil sample analytical results are compared to the New York State Department of Environmental Conservation (NYSDEC) Title 6 of the official compilation of New York Codes, Rules, and Regulations (NYCRR) Part 375 Restricted Residential Soil Cleanup Objectives (RRSCOs).
2. RRSCO exceedances are in bold and highlighted yellow.
3. ND = Not Detected
4. Results shown as "ND" with Reporting Limits exceeding RRSCOs are in bold.
5. mg/kg = milligrams per kilogram.
6. Qualifier (Q) definitions are provided in the official lab reports.

TABLE 9C: Total Metals in Soil

Surface soil samples collected outside of AOCs

Soil Sample Results (non-QA/QC)

Hudson River Psychiatric Center - North BCP Site, Poughkeepsie, NY

PVE Sheffler File #560909

	Date Sampled	11/25/2014		12/15/2014		11/25/2014		12/15/2014		11/25/2014		12/15/2014	
	Location	SS-25		SS-25		SS-26		SS-26		SS-27		SS-27	
	Sample ID	SS-25 (0-2")		SS-25 2-24"		SS-26 (0-2")		SS-26 2-24"		SS-27 (0-2")		SS-27 2-24"	
Analyte	RRSCOs	Result	Q	Result	Q	Result	Q	Result	Q	Result	Q	Result	Q
Metals (mg/kg)													
Aluminum													
Antimony													
Arsenic	**16**	6.15		4.21		10.0		7.86		12.7		6.34	
Barium	400	76.1		42.2		93.8	D	107		61.5		124	
Beryllium	72	0.610	J	0.439	J	0.672	J	0.701		0.608	J	0.842	
Cadmium	**4.3**	ND< 0.653	U	ND< 0.551	U	ND< 0.744	U	ND< 0.642	U	0.564	J	ND< 0.695	U
Calcium													
Chromium, Hexavalent	110												
Chromium, Hexavalent	110	ND< 1.4	U	ND< 1.1	U	ND< 1.4	U	ND< 1.2	U	ND< 1.5	U	ND< 1.2	U
Chromium, Total		16.8		15.3		19.8		17.9		19.1		17.6	
Cobalt													
Copper	270	21.5		22.5		25.0		20.1		34.8		26.4	
Cyanide	27												
Cyanide	27	ND< 0.646	U	ND< 0.421	U	ND< 0.629	U	ND< 0.518	U	ND< 0.698	U	ND< 0.422	U
Iron													
Lead	400	108		17.5		112		42.5		102		108	
Magnesium													
Manganese	**2000**	845		575		1020	D	1060		790		1300	
Mercury	**0.81**	0.203		0.0798		0.0812		0.0594		0.163		**1.89**	
Nickel	310	20.8		21.9		23.7	D	21.5		34.6		22.7	
Potassium													
Selenium	180	ND< 1.31	U	ND< 1.10	U	ND< 1.49	U	ND< 1.28	U	ND< 1.58	U	ND< 1.39	U
Silver	180	ND< 1.31	U	ND< 1.10	U	ND< 1.49	U	ND< 1.28	U	ND< 1.58	U	ND< 1.39	U
Sodium													
Thallium													
Vanadium													
Zinc	10000	83.2		66.7		95.9		70.4		112		96.4	

NOTES:

1. Soil sample analytical results are compared to the New York State Department of Environmental Conservation (NYSDEC) Title 6 of the official compilation of New York Codes, Rules, and Regulations (NYCRR) Part 375 Restricted Residential Soil Cleanup Objectives (RRSCOs).
2. RRSCO exceedances are in bold and highlighted yellow.
3. ND = Not Detected
4. Results shown as "ND" with Reporting Limits exceeding RRSCOs are in bold.
5. mg/kg = milligrams per kilogram.
6. Qualifier (Q) definitions are provided in the official lab reports.

Table 9D – Pesticides, Herbicides, and PCBs in Soil – Surface Samples Outside AOCs

TABLE 9D: Pesticides, Herbicides, and PCBs in Soil
Surface soil samples collected outside of AOCs
Soil Sample Results (non-QA/QC)
Hudson River Psychiatric Center - North BCP Site, Poughkeepsie, NY
PVE Sheffler File #560909

	Date Sampled	5/5/2014		5/5/2014		5/5/2014		5/5/2014		5/5/2014		5/5/2014		5/5/2014		5/5/2014	
	Location	SS-1		SS-1		SS-2		SS-2		SS-3		SS-3		SS-4		SS-4	
	Sample ID	SS-1 0-2"		SS-1 12-18"		SS-2 0-2"		SS-2 12-16"		SS-3 0-2"		SS-3 12-20"		SS-4 0-2"		SS-4 12-17"	
Analyte	RRSCOs	Result	Q	Result	Q	Result	Q	Result	Q	Result	Q	Result	Q	Result	Q	Result	Q
Pesticides (µg/kg)																	
Aldrin	97	ND< 2.2	U	ND< 2.0	U	ND< 2.2	U	ND< 1.9	U	ND< 2.1	U	ND< 2.0	U	ND< 2.2	U	ND< 1.9	U
Alpha Bhc (Alpha Hexachlorocyclohexane)	480	ND< 2.2	U	ND< 2.0	U	ND< 2.2	U	22.0		ND< 2.1	U	ND< 2.0	U	ND< 2.2	U	ND< 1.9	U
Alpha Chlordane	4200	ND< 2.2	U	ND< 2.0	U	ND< 2.2	U	ND< 1.9	U	ND< 2.1	U	ND< 2.0	U	ND< 2.2	U	ND< 1.9	U
Alpha Endosulfan	24000	ND< 2.2	U	ND< 2.0	U	ND< 2.2	U	ND< 1.9	U	ND< 2.1	U	ND< 3.8	U	ND< 2.2	U	ND< 1.9	U
Beta Bhc (Beta Hexachlorocyclohexane)	360	ND< 2.2	U	ND< 2.0	U	ND< 2.2	U	ND< 1.9	U	ND< 2.1	U	ND< 2.0	U	ND< 2.2	U	ND< 1.9	U
Beta Endosulfan	24000	ND< 4.2	U	ND< 3.8	U	ND< 4.3	U	ND< 3.6	U	ND< 4.1	U	ND< 3.8	U	ND< 4.4	U	ND< 3.6	U
Chlordane																	
Delta BHC (Delta Hexachlorocyclohexane)	100000	ND< 2.2	U	ND< 2.0	U	ND< 2.2	U	ND< 1.9	U	ND< 2.1	U	ND< 3.8	U	ND< 2.2	U	ND< 1.9	U
Dieldrin	200	ND< 4.2	U	ND< 3.8	U	ND< 4.3	U	ND< 3.6	U	ND< 4.1	U	ND< 2.0	U	ND< 4.4	U	ND< 3.6	U
Endosulfan Sulfate	24000	ND< 4.2	U	ND< 3.8	U	ND< 4.3	U	ND< 3.6	U	ND< 4.1	U	ND< 3.8	U	ND< 4.4	U	ND< 3.6	U
Endrin	11000	ND< 4.2	U	ND< 3.8	U	ND< 4.3	U	ND< 3.6	U	ND< 4.1	U	ND< 3.8	U	ND< 4.4	U	ND< 3.6	U
Endrin Aldehyde		ND< 4.2	U	ND< 3.8	U	ND< 4.3	U	ND< 3.6	U	ND< 4.1	U	ND< 3.8	U	ND< 4.4	U	ND< 3.6	U
Endrin Ketone		ND< 4.2	U	ND< 3.8	U	ND< 4.3	U	ND< 3.6	U	ND< 4.1	U	ND< 3.8	U	ND< 4.4	U	ND< 3.6	U
Gamma Bhc (Lindane)	1300	ND< 2.2	U	ND< 2.0	U	ND< 2.2	U	17.0		ND< 2.1	U	ND< 2.0	U	ND< 2.2	U	ND< 1.9	U
Gamma Chlordane		ND< 2.2	U	ND< 2.0	U	ND< 2.2	U	ND< 1.9	U	ND< 2.1	U	ND< 2.0	U	ND< 2.2	U	ND< 1.9	U
Heptachlor	2100	ND< 2.2	U	ND< 2.0	U	ND< 2.2	U	ND< 1.9	U	ND< 2.1	U	ND< 2.0	U	ND< 2.2	U	ND< 1.9	U
Heptachlor Epoxide		ND< 2.2	U	ND< 2.0	U	ND< 2.2	U	ND< 1.9	U	ND< 2.1	U	ND< 2.0	U	ND< 2.2	U	ND< 1.9	U
Methoxychlor		ND< 22	U	ND< 20	U	ND< 22	U	ND< 19	U	ND< 21	U	ND< 20	U	ND< 22	U	ND< 19	U
P,P'-DDD	13000	ND< 4.2	U	ND< 3.8	U	ND< 4.3	U	ND< 3.6	U	ND< 4.1	U	ND< 3.8	U	ND< 4.4	U	ND< 3.6	U
P,P'-DDE	8900	ND< 4.2	U	ND< 3.8	U	ND< 4.3	U	ND< 3.6	U	ND< 4.1	U	ND< 3.8	U	ND< 4.4	U	ND< 3.6	U
P,P'-DDT	7900	8.50		ND< 3.8	U	15.0		6.20		ND< 4.1	U	ND< 3.8	U	8.50		ND< 3.6	U
Toxaphene		ND< 220	U	ND< 200	U	ND< 220	U	ND< 190	U	ND< 210	U	ND< 200	U	ND< 220	U	ND< 190	U
Herbicides (µg/kg)																	
Silvex (2,4,5-TP)	100000	ND< 255	U	ND< 233	U	ND< 262	U	ND< 221	U	ND< 249	U	ND< 232	U	ND< 264	U	ND< 221	U
PCBs (mg/kg)																	
PCB-1016 (Aroclor 1016)		ND< 0.0370	U	ND< 0.0327	U	ND< 0.0353	U	ND< 0.0319	U	ND< 0.0391	U	ND< 0.0332	U	ND< 0.0392	U	ND< 0.0315	U
PCB-1221 (Aroclor 1221)		ND< 0.0370	U	ND< 0.0327	U	ND< 0.0353	U	ND< 0.0319	U	ND< 0.0391	U	ND< 0.0332	U	ND< 0.0392	U	ND< 0.0315	U
PCB-1232 (Aroclor 1232)		ND< 0.0370	U	ND< 0.0327	U	ND< 0.0353	U	ND< 0.0319	U	ND< 0.0391	U	ND< 0.0332	U	ND< 0.0392	U	ND< 0.0315	U
PCB-1242 (Aroclor 1242)		ND< 0.0370	U	ND< 0.0327	U	ND< 0.0353	U	ND< 0.0319	U	ND< 0.0391	U	ND< 0.0332	U	ND< 0.0392	U	ND< 0.0315	U
PCB-1248 (Aroclor 1248)		ND< 0.0370	U	ND< 0.0327	U	ND< 0.0353	U	ND< 0.0319	U	ND< 0.0391	U	ND< 0.0332	U	ND< 0.0392	U	ND< 0.0315	U
PCB-1254 (Aroclor 1254)		ND< 0.0370	U	ND< 0.0327	U	ND< 0.0353	U	ND< 0.0319	U	ND< 0.0391	U	ND< 0.0332	U	ND< 0.0392	U	ND< 0.0315	U
PCB-1260 (Aroclor 1260)		ND< 0.0370	U	ND< 0.0327	U	0.0321	J	ND< 0.0319	U	ND< 0.0391	U	ND< 0.0332	U	ND< 0.0392	U	ND< 0.0315	U
PCB-1262 (Aroclor 1262)		ND< 0.0370	U	ND< 0.0327	U	ND< 0.0353	U	ND< 0.0319	U	ND< 0.0391	U	ND< 0.0332	U	ND< 0.0392	U	ND< 0.0315	U
PCB-1268 (Aroclor 1268)		ND< 0.0370	U	ND< 0.0327	U	ND< 0.0353	U	ND< 0.0319	U	ND< 0.0391	U	ND< 0.0332	U	ND< 0.0392	U	ND< 0.0315	U

NOTES:

1. Soil sample analytical results are compared to the New York State Department of Environmental Conservation (NYSDEC) Title 6 of the official compilation of New York Codes, Rules, and Regulations (NYCRR) Part 375 Restricted Residential Soil Cleanup Objectives (RRSCOs).
2. RRSCO exceedances are in bold and highlighted yellow.
3. ND = Not Detected
4. Results shown as "ND" with Reporting Limits exceeding RRSCOs are in bold.
5. PCBs = Polychlorinated Biphenyls
6. µg/kg = micrograms per kilogram.
7. mg/kg = milligrams per kilogram.
8. Qualifier (Q) definitions are provided in the official lab reports.

TABLE 9D: Pesticides, Herbicides, and PCBs in Soil
Surface soil samples collected outside of AOCs
Soil Sample Results (non-QA/QC)
Hudson River Psychiatric Center - North BCP Site, Poughkeepsie, NY
PVE Sheffler File #560909

	Date Sampled	5/5/2014		5/5/2014		5/15/2014		5/15/2014		5/2/2014		5/2/2014		5/2/2014		5/2/2014	
	Location	SS-5		SS-5		SS-6B		SS-6B		SS-7		SS-7		SS-8		SS-8	
	Sample ID	SS-5 0-2"		SS-5 12-20"		SS-6B 0-2"		SS-6B 12-24"		SS-7 0-2"		SS-7 12-20"		SS-8 0-2"		SS-8 12-22"	
Analyte	RRSCOs	Result	Q	Result	Q	Result	Q	Result	Q	Result	Q	Result	Q	Result	Q	Result	Q
Pesticides (µg/kg)																	
Aldrin	97	ND< 2.0	U	ND< 2.0	U	ND< 3.70	U	ND< 3.27	U	ND< 0.1	U	ND< 0.1	U	ND< 0.1	U	ND< 0.1	U
Alpha Bhc (Alpha Hexachlorocyclohexane)	480	ND< 2.0	U	ND< 2.0	U	ND< 3.70	U	ND< 3.27	U	ND< 0.1	U	ND< 0.1	U	ND< 0.1	U	ND< 0.1	U
Alpha Chlordane	4200	ND< 2.0	U	ND< 2.0	U	ND< 3.70	U	ND< 3.27	U	ND< 0.1	U	ND< 0.1	U	ND< 0.1	U	ND< 0.1	U
Alpha Endosulfan	24000	ND< 2.0	U	ND< 2.0	U	ND< 3.70	U	ND< 3.27	U	ND< 0.1	U	ND< 0.1	U	ND< 0.1	U	ND< 0.1	U
Beta Bhc (Beta Hexachlorocyclohexane)	360	ND< 2.0	U	ND< 2.0	U	ND< 3.70	U	ND< 3.27	U	ND< 0.1	U	ND< 0.1	U	ND< 0.1	U	ND< 0.1	U
Beta Endosulfan	24000	ND< 3.9	U	ND< 3.9	U	ND< 3.70	U	ND< 3.27	U	ND< 0.1	U	ND< 0.1	U	ND< 0.1	U	ND< 0.1	U
Chlordane										ND< 0.1	U	ND< 0.1	U	ND< 0.1	U	ND< 0.1	U
Delta BHC (Delta Hexachlorocyclohexane)	100000	ND< 2.0	U	ND< 2.0	U	ND< 3.70	U	ND< 3.27	U	ND< 0.1	U	ND< 0.1	U	ND< 0.1	U	ND< 0.1	U
Dieldrin	200	ND< 3.9	U	ND< 3.9	U	ND< 3.70	U	ND< 3.27	U	ND< 0.1	U	ND< 0.1	U	ND< 0.1	U	ND< 0.1	U
Endosulfan Sulfate	24000	ND< 3.9	U	ND< 3.9	U	ND< 3.70	U	ND< 3.27	U	ND< 0.1	U	ND< 0.1	U	ND< 0.1	U	ND< 0.1	U
Endrin	11000	ND< 3.9	U	ND< 3.9	U	2.05	JP	ND< 3.27	U	ND< 0.1	U	ND< 0.1	U	ND< 0.1	U	ND< 0.1	U
Endrin Aldehyde		ND< 3.9	U	ND< 3.9	U	ND< 3.70	U	ND< 3.27	U	ND< 0.1	U	ND< 0.1	U	ND< 0.1	U	ND< 0.1	U
Endrin Ketone		ND< 3.9	U	ND< 3.9	U	2.85	JP	ND< 3.27	U	ND< 0.1	U	ND< 0.1	U	ND< 0.1	U	ND< 0.1	U
Gamma Bhc (Lindane)	1300	ND< 2.0	U	ND< 2.0	U	ND< 3.70	U	ND< 3.27	U	ND< 0.1	U	ND< 0.1	U	ND< 0.1	U	ND< 0.1	U
Gamma Chlordane		ND< 2.0	U	ND< 2.0	U	ND< 3.70	U	ND< 3.27	U	ND< 0.1	U	ND< 0.1	U	ND< 0.1	U	ND< 0.1	U
Heptachlor	2100	ND< 2.0	U	ND< 2.0	U	ND< 3.70	U	ND< 3.27	U	ND< 0.1	U	ND< 0.1	U	ND< 0.1	U	ND< 0.1	U
Heptachlor Epoxide		ND< 2.0	U	ND< 2.0	U	ND< 3.70	U	ND< 3.27	U	ND< 0.1	U	ND< 0.1	U	ND< 0.1	U	ND< 0.1	U
Methoxychlor		ND< 20	U	ND< 20	U	ND< 3.70	U	ND< 3.27	U	ND< 0.1	U	ND< 0.1	U	ND< 0.1	U	ND< 0.1	U
P,P'-DDD	13000	ND< 3.9	U	ND< 3.9	U	ND< 3.70	U	ND< 3.27	U	ND< 0.1	U	ND< 0.1	U	ND< 0.1	U	ND< 0.1	U
P,P'-DDE	8900	ND< 3.9	U	ND< 3.9	U	ND< 3.70	U	ND< 3.27	U	ND< 0.1	U	ND< 0.1	U	ND< 0.1	U	ND< 0.1	U
P,P'-DDT	7900	5.20		ND< 3.9	U	2.98	J	ND< 3.27	U	3.70	J	ND< 0.1	U	2.70	J	ND< 0.1	U
Toxaphene		ND< 200	U	ND< 200	U	ND< 37.0	U	ND< 32.7	U	ND< 200	U	ND< 190	U	ND< 220	U	ND< 210	U
Herbicides (µg/kg)																	
Silvex (2,4,5-TP)	100000	ND< 236	U	ND< 238	U	ND< 15	U	ND< 14	U	ND< 239	U	ND< 225	U	ND< 260	U	ND< 246	U
PCBs (mg/kg)																	
PCB-1016 (Aroclor 1016)		ND< 0.0335	U	ND< 0.0338	U	ND< 0.0370	U	ND< 0.0327	U	ND< 0.0348	U	ND< 0.0341	U	ND< 0.0373	U	ND< 0.0324	U
PCB-1221 (Aroclor 1221)		ND< 0.0335	U	ND< 0.0338	U	ND< 0.0370	U	ND< 0.0327	U	ND< 0.0348	U	ND< 0.0341	U	ND< 0.0373	U	ND< 0.0324	U
PCB-1232 (Aroclor 1232)		ND< 0.0335	U	ND< 0.0338	U	ND< 0.0370	U	ND< 0.0327	U	ND< 0.0348	U	ND< 0.0341	U	ND< 0.0373	U	ND< 0.0324	U
PCB-1242 (Aroclor 1242)		ND< 0.0335	U	ND< 0.0338	U	ND< 0.0370	U	ND< 0.0327	U	ND< 0.0348	U	ND< 0.0341	U	ND< 0.0373	U	ND< 0.0324	U
PCB-1248 (Aroclor 1248)		ND< 0.0335	U	ND< 0.0338	U	ND< 0.0370	U	ND< 0.0327	U	ND< 0.0348	U	ND< 0.0341	U	ND< 0.0373	U	ND< 0.0324	U
PCB-1254 (Aroclor 1254)		ND< 0.0335	U	ND< 0.0338	U	ND< 0.0370	U	ND< 0.0327	U	ND< 0.0348	U	ND< 0.0341	U	ND< 0.0373	U	ND< 0.0324	U
PCB-1260 (Aroclor 1260)		ND< 0.0335	U	ND< 0.0338	U	ND< 0.0370	U	ND< 0.0327	U	ND< 0.0348	U	ND< 0.0341	U	ND< 0.0373	U	ND< 0.0324	U
PCB-1262 (Aroclor 1262)		ND< 0.0335	U	ND< 0.0338	U	0.0218	J	ND< 0.0327	U	ND< 0.0348	U	ND< 0.0341	U	ND< 0.0373	U	ND< 0.0324	U
PCB-1268 (Aroclor 1268)		ND< 0.0335	U	ND< 0.0338	U	ND< 0.0370	U	ND< 0.0327	U	ND< 0.0348	U	ND< 0.0341	U	ND< 0.0373	U	ND< 0.0324	U

NOTES:

1. Soil sample analytical results are compared to the New York State Department of Environmental Conservation (NYSDEC) Title 6 of the official compilation of New York Codes, Rules, and Regulations (NYCRR) Part 375 Restricted Residential Soil Cleanup Objectives (RRSCOs).
2. RRSCO exceedances are in bold and highlighted yellow.
3. ND = Not Detected
4. Results shown as "ND" with Reporting Limits exceeding RRSCOs are in bold.
5. PCBs = Polychlorinated Biphenyls
6. µg/kg = micrograms per kilogram.
7. mg/kg = milligrams per kilogram.
8. Qualifier (Q) definitions are provided in the official lab reports.

TABLE 9D: Pesticides, Herbicides, and PCBs in Soil
Surface soil samples collected outside of AOCs
Soil Sample Results (non-QA/QC)
Hudson River Psychiatric Center - North BCP Site, Poughkeepsie, NY
PVE Sheffler File #560909

	Date Sampled	5/2/2014		5/2/2014		5/2/2014		5/2/2014		5/2/2014		5/2/2014		5/2/2014		5/2/2014	
	Location	SS-9		SS-9		SS-10		SS-10		SS-11		SS-11		SS-12		SS-13	
	Sample ID	SS-9 0-2"		SS-9 12-15"		SS-10 0-2"		SS-10 12-20"		SS-11 0-2"		SS-11 12-19"		SS-12 0-2"		SS-13 0-2"	
Analyte	RRSCOs	Result	Q	Result	Q	Result	Q	Result	Q	Result	Q	Result	Q	Result	Q	Result	Q
Pesticides (µg/kg)																	
Aldrin	97	ND< 0.1	U	ND< 0.1	U	ND< 0.1	U	ND< 0.1	U	ND< 0.1	U	ND< 0.1	U	ND< 0.1	U	ND< 0.1	U
Alpha Bhc (Alpha Hexachlorocyclohexane)	480	ND< 0.1	U	ND< 0.1	U	ND< 0.1	U	ND< 0.1	U	ND< 0.1	U	ND< 0.1	U	ND< 0.1	U	ND< 0.1	U
Alpha Chlordane	4200	ND< 0.1	U	ND< 0.1	U	ND< 0.1	U	ND< 0.1	U	ND< 0.1	U	ND< 0.1	U	ND< 0.1	U	ND< 0.1	U
Alpha Endosulfan	24000	ND< 0.1	U	ND< 0.1	U	ND< 0.1	U	ND< 0.1	U	ND< 0.1	U	ND< 0.1	U	ND< 0.1	U	ND< 0.1	U
Beta Bhc (Beta Hexachlorocyclohexane)	360	ND< 0.1	U	ND< 0.1	U	ND< 0.1	U	ND< 0.1	U	ND< 0.1	U	ND< 0.1	U	ND< 0.1	U	ND< 0.1	U
Beta Endosulfan	24000	ND< 0.1	U	ND< 0.1	U	ND< 0.1	U	ND< 0.1	U	ND< 0.1	U	ND< 0.1	U	ND< 0.1	U	ND< 0.1	U
Chlordane		ND< 0.1	U	ND< 0.1	U	ND< 0.1	U	ND< 0.1	U	ND< 0.1	U	ND< 0.1	U	ND< 0.1	U	ND< 0.1	U
Delta BHC (Delta Hexachlorocyclohexane)	100000	ND< 0.1	U	ND< 0.1	U	ND< 0.1	U	ND< 0.1	U	ND< 0.1	U	ND< 0.1	U	ND< 0.1	U	ND< 0.1	U
Dieldrin	200	ND< 0.1	U	ND< 0.1	U	ND< 0.1	U	ND< 0.1	U	ND< 0.1	U	ND< 0.1	U	ND< 0.1	U	ND< 0.1	U
Endosulfan Sulfate	24000	ND< 0.1	U	ND< 0.1	U	ND< 0.1	U	ND< 0.1	U	ND< 0.1	U	ND< 0.1	U	ND< 0.1	U	ND< 0.1	U
Endrin	11000	ND< 0.1	U	ND< 0.1	U	ND< 0.1	U	ND< 0.1	U	ND< 0.1	U	ND< 0.1	U	ND< 0.1	U	ND< 0.1	U
Endrin Aldehyde		ND< 0.1	U	ND< 0.1	U	ND< 0.1	U	ND< 0.1	U	ND< 0.1	U	ND< 0.1	U	ND< 0.1	U	ND< 0.1	U
Endrin Ketone		ND< 0.1	U	ND< 0.1	U	ND< 0.1	U	ND< 0.1	U	ND< 0.1	U	ND< 0.1	U	ND< 0.1	U	ND< 0.1	U
Gamma Bhc (Lindane)	1300	ND< 0.1	U	ND< 0.1	U	ND< 0.1	U	ND< 0.1	U	ND< 0.1	U	ND< 0.1	U	ND< 0.1	U	ND< 0.1	U
Gamma Chlordane		ND< 0.1	U	ND< 0.1	U	ND< 0.1	U	ND< 0.1	U	ND< 0.1	U	ND< 0.1	U	ND< 0.1	U	ND< 0.1	U
Heptachlor	2100	ND< 0.1	U	ND< 0.1	U	ND< 0.1	U	ND< 0.1	U	ND< 0.1	U	ND< 0.1	U	ND< 0.1	U	ND< 0.1	U
Heptachlor Epoxide		ND< 0.1	U	ND< 0.1	U	ND< 0.1	U	ND< 0.1	U	ND< 0.1	U	ND< 0.1	U	ND< 0.1	U	ND< 0.1	U
Methoxychlor		ND< 0.1	U	ND< 0.1	U	ND< 0.1	U	ND< 0.1	U	ND< 0.1	U	ND< 0.1	U	23.0		ND< 0.1	U
P,P'-DDD	13000	ND< 0.1	U	ND< 0.1	U	ND< 0.1	U	ND< 0.1	U	ND< 0.1	U	ND< 0.1	U	ND< 0.1	U	ND< 0.1	U
P,P'-DDE	8900	ND< 0.1	U	ND< 0.1	U	ND< 0.1	U	ND< 0.1	U	ND< 0.1	U	ND< 0.1	U	ND< 0.1	U	ND< 0.1	U
P,P'-DDT	7900	7.40		4.40		ND< 0.1	U	ND< 0.1	U	210		33.0		19.0		4.20	
Toxaphene		ND< 220	U	ND< 210	U	ND< 230	U	ND< 200	U	ND< 990	U	ND< 200	U	ND< 230	U	ND< 210	U
Herbicides (µg/kg)																	
Silvex (2,4,5-TP)	100000	ND< 261	U	ND< 247	U	ND< 269	U	ND< 234	U	ND< 233	U	ND< 234	U	ND< 272	U	ND< 241	U
PCBs (mg/kg)																	
PCB-1016 (Aroclor 1016)		ND< 0.0369	U	ND< 0.0353	U	ND< 0.0378	U	ND< 0.0331	U	ND< 0.168	U	ND< 0.0328	U	ND< 0.0396	U	ND< 0.0356	U
PCB-1221 (Aroclor 1221)		ND< 0.0369	U	ND< 0.0353	U	ND< 0.0378	U	ND< 0.0331	U	ND< 0.168	U	ND< 0.0328	U	ND< 0.0396	U	ND< 0.0356	U
PCB-1232 (Aroclor 1232)		ND< 0.0369	U	ND< 0.0353	U	ND< 0.0378	U	ND< 0.0331	U	ND< 0.168	U	ND< 0.0328	U	ND< 0.0396	U	ND< 0.0356	U
PCB-1242 (Aroclor 1242)		ND< 0.0369	U	ND< 0.0353	U	ND< 0.0378	U	ND< 0.0331	U	ND< 0.168	U	ND< 0.0328	U	ND< 0.0396	U	ND< 0.0356	U
PCB-1248 (Aroclor 1248)		ND< 0.0369	U	ND< 0.0353	U	ND< 0.0378	U	ND< 0.0331	U	ND< 0.168	U	ND< 0.0328	U	ND< 0.0396	U	ND< 0.0356	U
PCB-1254 (Aroclor 1254)		ND< 0.0369	U	ND< 0.0353	U	ND< 0.0378	U	ND< 0.0331	U	0.954		0.187		ND< 0.0396	U	ND< 0.0356	U
PCB-1260 (Aroclor 1260)		ND< 0.0369	U	ND< 0.0353	U	ND< 0.0378	U	ND< 0.0331	U	0.744		0.154		ND< 0.0396	U	ND< 0.0356	U
PCB-1262 (Aroclor 1262)		ND< 0.0369	U	ND< 0.0353	U	ND< 0.0378	U	ND< 0.0331	U	ND< 0.168	U	ND< 0.0328	U	ND< 0.0396	U	ND< 0.0356	U
PCB-1268 (Aroclor 1268)		ND< 0.0369	U	ND< 0.0353	U	ND< 0.0378	U	ND< 0.0331	U	ND< 0.168	U	ND< 0.0328	U	ND< 0.0396	U	ND< 0.0356	U

NOTES:

1. Soil sample analytical results are compared to the New York State Department of Environmental Conservation (NYSDEC) Title 6 of the official compilation of New York Codes, Rules, and Regulations (NYCRR) Part 375 Restricted Residential Soil Cleanup Objectives (RRSCOs).
2. RRSCO exceedances are in bold and highlighted yellow.
3. ND = Not Detected
4. Results shown as "ND" with Reporting Limits exceeding RRSCOs are in bold.
5. PCBs = Polychlorinated Biphenyls
6. µg/kg = micrograms per kilogram.
7. mg/kg = milligrams per kilogram.
8. Qualifier (Q) definitions are provided in the official lab reports.

TABLE 9D: Pesticides, Herbicides, and PCBs in Soil
Surface soil samples collected outside of AOCs
Soil Sample Results (non-QA/QC)
Hudson River Psychiatric Center - North BCP Site, Poughkeepsie, NY
PVE Sheffler File #560909

	Date Sampled	5/2/2014		5/2/2014		5/2/2014		5/1/2014		5/1/2014		5/1/2014		5/1/2014		5/1/2014	
	Location	SS-13		SS-14		SS-14		SS-15		SS-15		SS-16		SS-16		SS-17	
	Sample ID	SS-13 12-20"		SS-14 0-2"		SS-14 12-20"		SS-15 0-2"		SS-15 12-16"		SS-16 0-2"		SS-16 12-20"		SS-17 0-2"	
Analyte	RRSCOs	Result	Q	Result	Q	Result	Q	Result	Q	Result	Q	Result	Q	Result	Q	Result	Q
Pesticides (µg/kg)																	
Aldrin	97	ND< 0.1	U	ND< 0.1	U	ND< 0.1	U	ND< 3.77	U	ND< 3.45	U	ND< 3.95	U	ND< 3.47	U	ND< 3.95	U
Alpha Bhc (Alpha Hexachlorocyclohexane)	480	ND< 0.1	U	ND< 0.1	U	ND< 0.1	U	ND< 3.77	U	ND< 3.45	U	ND< 3.95	U	ND< 3.47	U	ND< 3.95	U
Alpha Chlordane	4200	ND< 0.1	U	ND< 0.1	U	ND< 0.1	U	ND< 3.77	U	ND< 3.45	U	ND< 3.95	U	ND< 3.47	U	ND< 3.95	U
Alpha Endosulfan	24000	ND< 0.1	U	ND< 0.1	U	ND< 0.1	U	ND< 3.77	U	ND< 3.45	U	ND< 3.95	U	ND< 3.47	U	ND< 3.95	U
Beta Bhc (Beta Hexachlorocyclohexane)	360	ND< 0.1	U	ND< 0.1	U	ND< 0.1	U	ND< 3.77	U	ND< 3.45	U	ND< 3.95	U	ND< 3.47	U	ND< 3.95	U
Beta Endosulfan	24000	ND< 0.1	U	ND< 0.1	U	ND< 0.1	U	ND< 3.77	U	ND< 3.45	U	ND< 3.95	U	ND< 3.47	U	ND< 3.95	U
Chlordane		ND< 0.1	U	ND< 0.1	U	ND< 0.1	U										
Delta BHC (Delta Hexachlorocyclohexane)	100000	ND< 0.1	U	ND< 0.1	U	ND< 0.1	U	ND< 3.77	U	ND< 3.45	U	ND< 3.95	U	ND< 3.47	U	ND< 3.95	U
Dieldrin	200	ND< 0.1	U	ND< 0.1	U	ND< 0.1	U	ND< 3.77	U	ND< 3.45	U	ND< 3.95	U	ND< 3.47	U	2.89	J
Endosulfan Sulfate	24000	ND< 0.1	U	ND< 0.1	U	ND< 0.1	U	ND< 3.77	U	ND< 3.45	U	ND< 3.95	U	ND< 3.47	U	ND< 3.95	U
Endrin	11000	ND< 0.1	U	ND< 0.1	U	ND< 0.1	U	ND< 3.77	U	ND< 3.45	U	ND< 3.95	U	ND< 3.47	U	ND< 3.95	U
Endrin Aldehyde		ND< 0.1	U	ND< 0.1	U	ND< 0.1	U	ND< 3.77	U	ND< 3.45	U	ND< 3.95	U	ND< 3.47	U	ND< 3.95	U
Endrin Ketone		ND< 0.1	U	ND< 0.1	U	ND< 0.1	U	ND< 3.77	U	ND< 3.45	U	ND< 3.95	U	ND< 3.47	U	2.78	J
Gamma Bhc (Lindane)	1300	ND< 0.1	U	ND< 0.1	U	ND< 0.1	U	ND< 3.77	U	ND< 3.45	U	ND< 3.95	U	ND< 3.47	U	ND< 3.95	U
Gamma Chlordane		ND< 0.1	U	ND< 0.1	U	ND< 0.1	U	ND< 3.77	U	ND< 3.45	U	ND< 3.95	U	ND< 3.47	U	ND< 3.95	U
Heptachlor	2100	ND< 0.1	U	ND< 0.1	U	ND< 0.1	U	ND< 3.77	U	ND< 3.45	U	ND< 3.95	U	ND< 3.47	U	ND< 3.95	U
Heptachlor Epoxide		ND< 0.1	U	ND< 0.1	U	ND< 0.1	U	ND< 3.77	U	ND< 3.45	U	ND< 3.95	U	ND< 3.47	U	ND< 3.95	U
Methoxychlor		ND< 0.1	U	ND< 0.1	U	ND< 0.1	U	ND< 3.77	U	ND< 3.45	U	ND< 3.95	U	ND< 3.47	U	ND< 3.95	U
P,P'-DDD	13000	ND< 0.1	U	ND< 0.1	U	ND< 0.1	U	ND< 3.77	U	ND< 3.45	U	ND< 3.95	U	ND< 3.47	U	ND< 3.95	U
P,P'-DDE	8900	ND< 0.1	U	ND< 0.1	U	ND< 0.1	U	2.88	J	ND< 3.45	U	3.98		ND< 3.47	U	ND< 3.95	U
P,P'-DDT	7900	6.50		3.40	J	ND< 0.1	U	2.59	J	ND< 3.45	U	5.03		ND< 3.47	U	4.57	
Toxaphene		ND< 200	U	ND< 220	U	ND< 200	U	ND< 37.7	U	ND< 34.5	U	ND< 39.5	U	ND< 34.7	U	ND< 39.5	U
Herbicides (µg/kg)																	
Silvex (2,4,5-TP)	100000	ND< 234	U	ND< 263	U	ND< 241	U	ND< 265	U	ND< 245	U	ND< 279	U	ND< 251	U	ND< 253	U
PCBs (mg/kg)																	
PCB-1016 (Aroclor 1016)		ND< 0.0335	U	ND< 0.0362	U	ND< 0.0336	U	ND< 0.0377	U	ND< 0.0345	U	ND< 0.0395	U	ND< 0.0347	U	ND< 0.0395	U
PCB-1221 (Aroclor 1221)		ND< 0.0335	U	ND< 0.0362	U	ND< 0.0336	U	ND< 0.0377	U	ND< 0.0345	U	ND< 0.0395	U	ND< 0.0347	U	ND< 0.0395	U
PCB-1232 (Aroclor 1232)		ND< 0.0335	U	ND< 0.0362	U	ND< 0.0336	U	ND< 0.0377	U	ND< 0.0345	U	ND< 0.0395	U	ND< 0.0347	U	ND< 0.0395	U
PCB-1242 (Aroclor 1242)		ND< 0.0335	U	ND< 0.0362	U	ND< 0.0336	U	ND< 0.0377	U	ND< 0.0345	U	ND< 0.0395	U	ND< 0.0347	U	ND< 0.0395	U
PCB-1248 (Aroclor 1248)		ND< 0.0335	U	ND< 0.0362	U	ND< 0.0336	U	ND< 0.0377	U	ND< 0.0345	U	ND< 0.0395	U	ND< 0.0347	U	ND< 0.0395	U
PCB-1254 (Aroclor 1254)		ND< 0.0335	U	ND< 0.0362	U	ND< 0.0336	U	ND< 0.0377	U	ND< 0.0345	U	ND< 0.0395	U	ND< 0.0347	U	ND< 0.0395	U
PCB-1260 (Aroclor 1260)		ND< 0.0335	U	ND< 0.0362	U	ND< 0.0336	U	ND< 0.0377	U	ND< 0.0345	U	ND< 0.0395	U	ND< 0.0347	U	ND< 0.0395	U
PCB-1262 (Aroclor 1262)		ND< 0.0335	U	ND< 0.0362	U	ND< 0.0336	U	ND< 0.0377	U	ND< 0.0345	U	ND< 0.0395	U	ND< 0.0347	U	ND< 0.0395	U
PCB-1268 (Aroclor 1268)		ND< 0.0335	U	ND< 0.0362	U	ND< 0.0336	U	ND< 0.0377	U	ND< 0.0345	U	ND< 0.0395	U	ND< 0.0347	U	ND< 0.0395	U

NOTES:

1. Soil sample analytical results are compared to the New York State Department of Environmental Conservation (NYSDEC) Title 6 of the official compilation of New York Codes, Rules, and Regulations (NYCRR) Part 375 Restricted Residential Soil Cleanup Objectives (RRSCOs).
2. RRSCO exceedances are in bold and highlighted yellow.
3. ND = Not Detected
4. Results shown as "ND" with Reporting Limits exceeding RRSCOs are in bold.
5. PCBs = Polychlorinated Biphenyls
6. µg/kg = micrograms per kilogram.
7. mg/kg = milligrams per kilogram.
8. Qualifier (Q) definitions are provided in the official lab reports.

TABLE 9D: Pesticides, Herbicides, and PCBs in Soil
Surface soil samples collected outside of AOCs
Soil Sample Results (non-QA/QC)
Hudson River Psychiatric Center - North BCP Site, Poughkeepsie, NY
PVE Sheffler File #560909

	Date Sampled	5/1/2014		5/1/2014		5/1/2014		11/24/2014		12/15/2014		11/24/2014		12/15/2014		11/24/2014	
	Location	SS-17		SS-18		SS-18		SS-19		SS-19		SS-20		SS-20		SS-21	
	Sample ID	SS-17 12-16"		SS-18 0-2"		SS-18 12-18"		SS-19 (0-2")		SS-19 2-24"		SS-20 (0-2")		SS-20 2-24"		SS-21 (0-2")	
Analyte	RRSCOs	Result	Q	Result	Q	Result	Q	Result	Q	Result	Q	Result	Q	Result	Q	Result	Q
Pesticides (µg/kg)																	
Aldrin	97	ND< 3.59	U	ND< 3.65	U	1.98	J	ND< 4.09	U	ND< 3.41	U	2.01	J	ND< 3.42	U	2.25	JP
Alpha Bhc (Alpha Hexachlorocyclohexane)	480	ND< 3.59	U	ND< 3.65	U	ND< 3.41	U	2.10	J	ND< 3.41	U	7.13		ND< 3.42	U	3.86	J
Alpha Chlordane	4200	ND< 3.59	U	ND< 3.65	U	ND< 3.41	U	18.0		5.40	P	16.6	M	2.43	J	78.9	
Alpha Endosulfan	24000	ND< 3.59	U	ND< 3.65	U	ND< 3.41	U	ND< 4.09	U	ND< 3.41	U	ND< 3.77	U	ND< 3.42	U	ND< 4.01	U
Beta Bhc (Beta Hexachlorocyclohexane)	360	ND< 3.59	U	ND< 3.65	U	ND< 3.41	U	ND< 4.09	U	ND< 3.41	U	ND< 3.77	U	ND< 3.42	U	5.11	P
Beta Endosulfan	24000	ND< 3.59	U	ND< 3.65	U	ND< 3.41	U	ND< 4.09	U	ND< 3.41	U	ND< 3.77	U	ND< 3.42	U	ND< 4.01	U
Chlordane																	
Delta BHC (Delta Hexachlorocyclohexane)	100000	ND< 3.59	U	ND< 3.65	U	ND< 3.41	U	2.48	JP	ND< 3.41	U	2.41	JP	ND< 3.42	U	3.49	J
Dieldrin	200	ND< 3.59	U	ND< 3.65	U	ND< 3.41	U	ND< 4.09	U	2.59	JP	ND< 3.77	U	ND< 3.42	U	ND< 4.01	U
Endosulfan Sulfate	24000	ND< 3.59	U	ND< 3.65	U	ND< 3.41	U	3.91	JP	ND< 3.41	U	2.87	JP	ND< 3.42	U	ND< 4.01	U
Endrin	11000	ND< 3.59	U	ND< 3.65	U	ND< 3.41	U	ND< 4.09	U	ND< 3.41	U	ND< 3.77	U	2.47	JP	25.8	
Endrin Aldehyde		ND< 3.59	U	ND< 3.65	U	ND< 3.41	U	6.95		2.01	J	2.80	JP	ND< 3.42	U	9.71	P
Endrin Ketone		ND< 3.59	U	ND< 3.65	U	ND< 3.41	U	8.28		3.72		4.83	P	ND< 3.42	U	21.9	
Gamma Bhc (Lindane)	1300	ND< 3.59	U	ND< 3.65	U	ND< 3.41	U	ND< 4.09	U	ND< 3.41	U	ND< 3.77	U	ND< 3.42	U	2.43	JP
Gamma Chlordane		ND< 3.59	U	ND< 3.65	U	ND< 3.41	U	ND< 4.09	U	ND< 3.41	U	1.96	JP	ND< 3.42	U	4.53	
Heptachlor	2100	ND< 3.59	U	ND< 3.65	U	ND< 3.41	U	ND< 4.09	U	ND< 3.41	U	ND< 3.77	U	ND< 3.42	U	4.77	P
Heptachlor Epoxide		ND< 3.59	U	ND< 3.65	U	ND< 3.41	U	ND< 4.09	U	ND< 3.41	U	2.65	JP	ND< 3.42	U	3.46	JP
Methoxychlor		ND< 3.59	U	ND< 3.65	U	ND< 3.41	U	5.84	P	ND< 3.41	U	ND< 3.77	U	ND< 3.42	U	16.2	P
P,P'-DDD	13000	ND< 3.59	U	ND< 3.65	U	2.60	J	5.72		ND< 3.41	U	ND< 3.77	U	ND< 3.42	U	8.75	P
P,P'-DDE	8900	ND< 3.59	U	ND< 3.65	U	ND< 3.41	U	4.41	P	ND< 3.41	U	9.41		2.04	J	10.1	
P,P'-DDT	7900	ND< 3.59	U	2.43	J	2.32	J	10.6		ND< 3.41	U	10.5		ND< 3.42	U	20.2	
Toxaphene		ND< 35.9	U	ND< 36.5	U	ND< 34.1	U	ND< 40.9	U	ND< 34.1	U	ND< 37.7	U	ND< 34.2	U	ND< 40.1	U
Herbicides (µg/kg)																	
Silvex (2,4,5-TP)	100000	ND< 223	U	ND< 249	U	ND< 240	U	ND< 18	U	ND< 15	U	ND< 19	U	ND< 15	U	ND< 18	U
PCBs (mg/kg)																	
PCB-1016 (Aroclor 1016)		ND< 0.0359	U	ND< 0.0365	U	ND< 0.0341	U	ND< 0.0409	U	ND< 0.0341	U	ND< 0.0377	U	ND< 0.0342	U	ND< 0.0401	U
PCB-1221 (Aroclor 1221)		ND< 0.0359	U	ND< 0.0365	U	ND< 0.0341	U	ND< 0.0409	U	ND< 0.0341	U	ND< 0.0377	U	ND< 0.0342	U	ND< 0.0401	U
PCB-1232 (Aroclor 1232)		ND< 0.0359	U	ND< 0.0365	U	ND< 0.0341	U	ND< 0.0409	U	ND< 0.0341	U	ND< 0.0377	U	ND< 0.0342	U	ND< 0.0401	U
PCB-1242 (Aroclor 1242)		ND< 0.0359	U	ND< 0.0365	U	ND< 0.0341	U	ND< 0.0409	U	ND< 0.0341	U	ND< 0.0377	U	ND< 0.0342	U	ND< 0.0401	U
PCB-1248 (Aroclor 1248)		ND< 0.0359	U	ND< 0.0365	U	ND< 0.0341	U	ND< 0.0409	U	ND< 0.0341	U	ND< 0.0377	U	ND< 0.0342	U	ND< 0.0401	U
PCB-1254 (Aroclor 1254)		ND< 0.0359	U	ND< 0.0365	U	ND< 0.0341	U	ND< 0.0409	U	ND< 0.0341	U	ND< 0.0377	U	ND< 0.0342	U	ND< 0.0401	U
PCB-1260 (Aroclor 1260)		ND< 0.0359	U	ND< 0.0365	U	ND< 0.0341	U	ND< 0.0409	U	ND< 0.0341	U	ND< 0.0377	U	ND< 0.0342	U	ND< 0.0401	U
PCB-1262 (Aroclor 1262)		ND< 0.0359	U	ND< 0.0365	U	ND< 0.0341	U	ND< 0.0409	U	ND< 0.0341	U	ND< 0.0377	U	ND< 0.0342	U	ND< 0.0401	U
PCB-1268 (Aroclor 1268)		ND< 0.0359	U	ND< 0.0365	U	ND< 0.0341	U	ND< 0.0409	U	ND< 0.0341	U	ND< 0.0377	U	ND< 0.0342	U	ND< 0.0401	U

NOTES:

1. Soil sample analytical results are compared to the New York State Department of Environmental Conservation (NYSDEC) Title 6 of the official compilation of New York Codes, Rules, and Regulations (NYCRR) Part 375 Restricted Residential Soil Cleanup Objectives (RRSCOs).
2. RRSCO exceedances are in bold and highlighted yellow.
3. ND = Not Detected
4. Results shown as "ND" with Reporting Limits exceeding RRSCOs are in bold.
5. PCBs = Polychlorinated Biphenyls
6. µg/kg = micrograms per kilogram.
7. mg/kg = milligrams per kilogram.
8. Qualifier (Q) definitions are provided in the official lab reports.

TABLE 9D: Pesticides, Herbicides, and PCBs in Soil
Surface soil samples collected outside of AOCs
Soil Sample Results (non-QA/QC)
Hudson River Psychiatric Center - North BCP Site, Poughkeepsie, NY
PVE Sheffler File #560909

	Date Sampled	12/15/2014		11/24/2014		12/15/2014		11/24/2014		12/15/2014		11/25/2014		12/15/2014		11/25/2014	
	Location	SS-21		SS-22		SS-22		SS-23		SS-23		SS-24		SS-24		SS-25	
	Sample ID	SS-21 2-24"		SS-22 (0-2")		SS-22 2-24"		SS-23 (0-2")		SS-23 2-24"		SS-24 (0-2")		SS-24 2-24"		SS-25 (0-2")	
Analyte	RRSCOs	Result	Q	Result	Q	Result	Q	Result	Q	Result	Q	Result	Q	Result	Q	Result	Q
Pesticides (µg/kg)																	
Aldrin	97	ND< 3.46	U	ND< 3.45	U	ND< 3.26	U	ND< 3.36	U	ND< 3.26	U	ND< 3.54	U	ND< 3.31	U	ND< 3.90	U
Alpha Bhc (Alpha Hexachlorocyclohexane)	480	ND< 3.46	U	2.17	J	ND< 3.26	U	ND< 3.36	U	ND< 3.26	U	ND< 3.54	U	ND< 3.31	U	2.17	J
Alpha Chlordane	4200	ND< 3.46	U	3.32	JP	ND< 3.26	U	8.05		ND< 3.26	U	4.70	P	4.57	P	7.08	
Alpha Endosulfan	24000	ND< 3.46	U	ND< 3.45	U	ND< 3.26	U	ND< 3.36	U	ND< 3.26	U	ND< 3.54	U	ND< 3.31	U	ND< 3.90	U
Beta Bhc (Beta Hexachlorocyclohexane)	360	ND< 3.46	U	ND< 3.45	U	ND< 3.26	U	ND< 3.36	U	ND< 3.26	U	ND< 3.54	U	ND< 3.31	U	ND< 3.90	U
Beta Endosulfan	24000	ND< 3.46	U	ND< 3.45	U	ND< 3.26	U	ND< 3.36	U	ND< 3.26	U	ND< 3.54	U	ND< 3.31	U	ND< 3.90	U
Chlordane																	
Delta BHC (Delta Hexachlorocyclohexane)	100000	1.84	JP	ND< 3.45	U	ND< 3.26	U	ND< 3.36	U	ND< 3.26	U	ND< 3.54	U	ND< 3.31	U	1.95	JP
Dieldrin	200	ND< 3.46	U	ND< 3.45	U	ND< 3.26	U	ND< 3.36	U	ND< 3.26	U	ND< 3.54	U	ND< 3.31	U	ND< 3.90	U
Endosulfan Sulfate	24000	ND< 3.46	U	ND< 3.45	U	ND< 3.26	U	2.68	JP	ND< 3.26	U	ND< 3.54	U	ND< 3.31	U	ND< 3.90	U
Endrin	11000	3.91	P	ND< 3.45	U	ND< 3.26	U	3.35	JP	ND< 3.26	U	1.99	JP	2.56	JP	ND< 3.90	U
Endrin Aldehyde		4.64		ND< 3.45	U	ND< 3.26	U	3.97		ND< 3.26	U	2.38	J	ND< 3.31	U	ND< 3.90	U
Endrin Ketone		5.13		2.59	J	ND< 3.26	U	7.29		ND< 3.26	U	ND< 3.54	U	1.79	JP	ND< 3.90	U
Gamma Bhc (Lindane)	1300	ND< 3.46	U	ND< 3.45	U	ND< 3.26	U	ND< 3.36	U	ND< 3.26	U	ND< 3.54	U	ND< 3.31	U	ND< 3.90	U
Gamma Chlordane		ND< 3.46	U	ND< 3.45	U	ND< 3.26	U	ND< 3.36	U	ND< 3.26	U	ND< 3.54	U	ND< 3.31	U	ND< 3.90	U
Heptachlor	2100	ND< 3.46	U	ND< 3.45	U	ND< 3.26	U	ND< 3.36	U	ND< 3.26	U	ND< 3.54	U	ND< 3.31	U	ND< 3.90	U
Heptachlor Epoxide		ND< 3.46	U	ND< 3.45	U	ND< 3.26	U	ND< 3.36	U	ND< 3.26	U	ND< 3.54	U	ND< 3.31	U	ND< 3.90	U
Methoxychlor		4.63	P	2.44	JP	ND< 3.26	U	2.45	JP	ND< 3.26	U	2.07	JP	1.82	JP	ND< 3.90	U
P,P'-DDD	13000	3.20	JP	2.35	JP	ND< 3.26	U	ND< 3.36	U	ND< 3.26	U	ND< 3.54	U	ND< 3.31	U	ND< 3.90	U
P,P'-DDE	8900	3.93		7.19		ND< 3.26	U	13.7		ND< 3.26	U	2.31	J	2.38	J	7.33	
P,P'-DDT	7900	4.98		7.37		ND< 3.26	U	16.6		ND< 3.26	U	2.86	J	ND< 3.31	U	8.84	
Toxaphene		ND< 34.6	U	ND< 34.5	U	ND< 32.6	U	ND< 33.6	U	ND< 32.6	U	ND< 35.4	U	ND< 33.1	U	ND< 39.0	U
Herbicides (µg/kg)																	
Silvex (2,4,5-TP)	100000	ND< 15	U	ND< 16	U	ND< 14	U	ND< 16	U	ND< 14	U	ND< 16	U	ND< 15	U	ND< 18	U
PCBs (mg/kg)																	
PCB-1016 (Aroclor 1016)		ND< 0.0346	U	ND< 0.0345	U	ND< 0.0326	U	ND< 0.0336	U	ND< 0.0326	U	ND< 0.0354	U	ND< 0.0331	U	ND< 0.0390	U
PCB-1221 (Aroclor 1221)		ND< 0.0346	U	ND< 0.0345	U	ND< 0.0326	U	ND< 0.0336	U	ND< 0.0326	U	ND< 0.0354	U	ND< 0.0331	U	ND< 0.0390	U
PCB-1232 (Aroclor 1232)		ND< 0.0346	U	ND< 0.0345	U	ND< 0.0326	U	ND< 0.0336	U	ND< 0.0326	U	ND< 0.0354	U	ND< 0.0331	U	ND< 0.0390	U
PCB-1242 (Aroclor 1242)		ND< 0.0346	U	ND< 0.0345	U	ND< 0.0326	U	ND< 0.0336	U	ND< 0.0326	U	ND< 0.0354	U	ND< 0.0331	U	ND< 0.0390	U
PCB-1248 (Aroclor 1248)		ND< 0.0346	U	ND< 0.0345	U	ND< 0.0326	U	ND< 0.0336	U	ND< 0.0326	U	ND< 0.0354	U	ND< 0.0331	U	ND< 0.0390	U
PCB-1254 (Aroclor 1254)		ND< 0.0346	U	ND< 0.0345	U	ND< 0.0326	U	ND< 0.0336	U	ND< 0.0326	U	ND< 0.0354	U	ND< 0.0331	U	ND< 0.0390	U
PCB-1260 (Aroclor 1260)		ND< 0.0346	U	ND< 0.0345	U	ND< 0.0326	U	ND< 0.0336	U	ND< 0.0326	U	ND< 0.0354	U	ND< 0.0331	U	ND< 0.0390	U
PCB-1262 (Aroclor 1262)		ND< 0.0346	U	ND< 0.0345	U	ND< 0.0326	U	ND< 0.0336	U	ND< 0.0326	U	ND< 0.0354	U	ND< 0.0331	U	ND< 0.0390	U
PCB-1268 (Aroclor 1268)		ND< 0.0346	U	ND< 0.0345	U	ND< 0.0326	U	ND< 0.0336	U	ND< 0.0326	U	ND< 0.0354	U	ND< 0.0331	U	ND< 0.0390	U

NOTES:

1. Soil sample analytical results are compared to the New York State Department of Environmental Conservation (NYSDEC) Title 6 of the official compilation of New York Codes, Rules, and Regulations (NYCRR) Part 375 Restricted Residential Soil Cleanup Objectives (RRSCOs).
2. RRSCO exceedances are in bold and highlighted yellow.
3. ND = Not Detected
4. Results shown as "ND" with Reporting Limits exceeding RRSCOs are in bold.
5. PCBs = Polychlorinated Biphenyls
6. µg/kg = micrograms per kilogram.
7. mg/kg = milligrams per kilogram.
8. Qualifier (Q) definitions are provided in the official lab reports.

TABLE 9D: Pesticides, Herbicides, and PCBs in Soil
Surface soil samples collected outside of AOCs
Soil Sample Results (non-QA/QC)
Hudson River Psychiatric Center - North BCP Site, Poughkeepsie, NY
PVE Sheffler File #560909

	Date Sampled	12/15/2014		11/25/2014		12/15/2014		11/25/2014		12/15/2014	
	Location	SS-25		SS-26		SS-26		SS-27		SS-27	
	Sample ID	SS-25 2-24"		SS-26 (0-2")		SS-26 2-24"		SS-27 (0-2")		SS-27 2-24"	
Analyte	RRSCOs	Result	Q	Result	Q	Result	Q	Result	Q	Result	Q
Pesticides (µg/kg)											
Aldrin	97	ND< 3.18	U	ND< 3.87	U	ND< 3.44	U	ND< 4.14	U	ND< 3.55	U
Alpha Bhc (Alpha Hexachlorocyclohexane)	480	ND< 3.18	U	2.19	J	ND< 3.44	U	2.48	J	ND< 3.55	U
Alpha Chlordane	4200	ND< 3.18	U	9.49		ND< 3.44	U	9.34		ND< 3.55	U
Alpha Endosulfan	24000	ND< 3.18	U	ND< 3.87	U	ND< 3.44	U	ND< 4.14	U	ND< 3.55	U
Beta Bhc (Beta Hexachlorocyclohexane)	360	ND< 3.18	U	ND< 3.87	U	ND< 3.44	U	ND< 4.14	U	ND< 3.55	U
Beta Endosulfan	24000	ND< 3.18	U	ND< 3.87	U	ND< 3.44	U	ND< 4.14	U	ND< 3.55	U
Chlordane											
Delta BHC (Delta Hexachlorocyclohexane)	100000	ND< 3.18	U	ND< 3.87	U	ND< 3.44	U	2.14	JP	ND< 3.55	U
Dieldrin	200	ND< 3.18	U	ND< 3.87	U	ND< 3.44	U	ND< 4.14	U	ND< 3.55	U
Endosulfan Sulfate	24000	ND< 3.18	U	2.88	JP	ND< 3.44	U	2.18	JP	ND< 3.55	U
Endrin	11000	ND< 3.18	U	5.96	P	ND< 3.44	U	5.04	P	ND< 3.55	U
Endrin Aldehyde		ND< 3.18	U	4.24		ND< 3.44	U	ND< 4.14	U	ND< 3.55	U
Endrin Ketone		ND< 3.18	U	8.49		2.07	J	3.11	JP	ND< 3.55	U
Gamma Bhc (Lindane)	1300	ND< 3.18	U	ND< 3.87	U	ND< 3.44	U	2.17	JP	ND< 3.55	U
Gamma Chlordane		ND< 3.18	U	2.21	JP	ND< 3.44	U	ND< 4.14	U	ND< 3.55	U
Heptachlor	2100	ND< 3.18	U	ND< 3.87	U	ND< 3.44	U	ND< 4.14	U	ND< 3.55	U
Heptachlor Epoxide		ND< 3.18	U	ND< 3.87	U	ND< 3.44	U	ND< 4.14	U	ND< 3.55	U
Methoxychlor		ND< 3.18	U	3.33	JPM	ND< 3.44	U	17.0	P	2.49	JP
P,P'-DDD	13000	ND< 3.18	U	2.54	JP	ND< 3.44	U	ND< 4.14	U	ND< 3.55	U
P,P'-DDE	8900	ND< 3.18	U	12.7		3.08	J	22.0		2.86	J
P,P'-DDT	7900	ND< 3.18	U	8.36		2.41	JP	16.4		ND< 3.55	U
Toxaphene		ND< 31.8	U	ND< 38.7	U	ND< 34.4	U	ND< 41.4	U	ND< 35.5	U
Herbicides (µg/kg)											
Silvex (2,4,5-TP)	100000	ND< 14	U	ND< 17	U	ND< 15	U	ND< 19	U	ND< 16	U
PCBs (mg/kg)											
PCB-1016 (Aroclor 1016)		ND< 0.0318	U	ND< 0.0387	U	ND< 0.0344	U	ND< 0.0414	U	ND< 0.0355	U
PCB-1221 (Aroclor 1221)		ND< 0.0318	U	ND< 0.0387	U	ND< 0.0344	U	ND< 0.0414	U	ND< 0.0355	U
PCB-1232 (Aroclor 1232)		ND< 0.0318	U	ND< 0.0387	U	ND< 0.0344	U	ND< 0.0414	U	ND< 0.0355	U
PCB-1242 (Aroclor 1242)		ND< 0.0318	U	ND< 0.0387	U	ND< 0.0344	U	ND< 0.0414	U	ND< 0.0355	U
PCB-1248 (Aroclor 1248)		ND< 0.0318	U	ND< 0.0387	U	ND< 0.0344	U	ND< 0.0414	U	ND< 0.0355	U
PCB-1254 (Aroclor 1254)		ND< 0.0318	U	ND< 0.0387	U	ND< 0.0344	U	ND< 0.0414	U	ND< 0.0355	U
PCB-1260 (Aroclor 1260)		ND< 0.0318	U	ND< 0.0387	U	ND< 0.0344	U	ND< 0.0414	U	ND< 0.0355	U
PCB-1262 (Aroclor 1262)		ND< 0.0318	U	ND< 0.0387	U	ND< 0.0344	U	ND< 0.0414	U	ND< 0.0355	U
PCB-1268 (Aroclor 1268)		ND< 0.0318	U	ND< 0.0387	U	ND< 0.0344	U	ND< 0.0414	U	ND< 0.0355	U

NOTES:

1. Soil sample analytical results are compared to the New York State Department of Environmental Conservation (NYSDEC) Title 6 of the official compilation of New York Codes, Rules, and Regulations (NYCRR) Part 375 Restricted Residential Soil Cleanup Objectives (RRSCOs).
2. RRSCO exceedances are in bold and highlighted yellow.
3. ND = Not Detected
4. Results shown as "ND" with Reporting Limits exceeding RRSCOs are in bold.
5. PCBs = Polychlorinated Biphenyls
6. µg/kg = micrograms per kilogram.
7. mg/kg = milligrams per kilogram.
8. Qualifier (Q) definitions are provided in the official lab reports.

Table 10A – VOCs in Groundwater

TABLE 10A: Volatile Organic Compounds (VOCs) in Groundwater
Groundwater Sample Results (non-QA/QC)
Hudson River Psychiatric Center - North BCP Site, Poughkeepsie, NY
PVE Sheffler File #560909

	Date Sampled	6/2/2014		7/28/2014		7/28/2014		5/30/2014		5/30/2014		5/30/2014		5/30/2014		7/28/2014		12/30/2014		12/30/2014		7/28/2014		5/30/2014	
	Location	MW-PH-1		MW-PH-2		MW-PH-3		MW-AG-1		MW-AG-2		MW-CW-2		MW-FS-1		MW-FD-1		MW-MRT-1		MW-MNTC-1		TMW-1R		TMW-2	
	Sample ID	MW-PH-1 7-17'		MW-PH-2, 6-16'		MW-PH-3, 8-18'		MW-AG-1 10-20'		MW-AG-2 5-15'		MW-CW-2 16-26'		MW-FS-1 20-30'		MW-FD-1 15-25'		MW-MRT-1		MW-MNTC-1		TMW-1R 28.5-38.5		TMW-2 20-30'	
Analyte	CLASS GA	Result	Q	Result	Q	Result	Q	Result	Q	Result	Q	Result	Q	Result	Q	Result	Q	Result	Q	Result	Q	Result	Q	Result	Q
VOCs (µg/L)																									
1,1,1-Trichloroethane	5	ND< 2.00	U	ND< 2.00	U	ND< 2.00	U	ND< 2.00	U	ND< 2.00	U	ND< 2.00	U	ND< 2.00	U	ND< 2.00	U	ND< 2.00	U	ND< 2.00	U	ND< 2.00	U	ND< 2.00	U
1,1,2,2-Tetrachloroethane	5	ND< 2.00	U	ND< 2.00	U	ND< 2.00	U	ND< 2.00	U	ND< 2.00	U	ND< 2.00	U	ND< 2.00	U	ND< 2.00	U	ND< 2.00	U	ND< 2.00	U	ND< 2.00	U	ND< 2.00	U
1,1,2-Trichloro-1,2,2-Trifluoroethane	5	ND< 2.00	U	ND< 2.00	U	ND< 2.00	U	ND< 2.00	U	ND< 2.00	U	ND< 2.00	U	ND< 2.00	U	ND< 2.00	U	ND< 2.00	U	ND< 2.00	U	ND< 2.00	U	ND< 2.00	U
1,1,2-Trichloroethane	**1**	**ND< 2.00**	**U**	**ND< 2.00**	**U**	**ND< 2.00**	**U**	**ND< 2.00**	**U**	**ND< 2.00**	**U**	**ND< 2.00**	**U**	**ND< 2.00**	**U**	**ND< 2.00**	**U**	**ND< 2.00**	**U**	**ND< 2.00**	**U**	**ND< 2.00**	**U**	**ND< 2.00**	**U**
1,1-Dichloroethane	5	ND< 2.00	U	ND< 2.00	U	ND< 2.00	U	ND< 2.00	U	ND< 2.00	U	ND< 2.00	U	ND< 2.00	U	ND< 2.00	U	ND< 2.00	U	ND< 2.00	U	ND< 2.00	U	ND< 2.00	U
1,1-Dichloroethene	5	ND< 2.00	U	ND< 2.00	U	ND< 2.00	U	ND< 2.00	U	ND< 2.00	U	ND< 2.00	U	ND< 2.00	U	ND< 2.00	U	ND< 2.00	U	ND< 2.00	U	ND< 2.00	U	ND< 2.00	U
1,2,3-Trichlorobenzene	5	ND< 5.00	U	ND< 5.00	U	ND< 5.00	U	ND< 5.00	U	ND< 5.00	U	ND< 5.00	U	ND< 5.00	U	ND< 5.00	U	ND< 5.00	U	ND< 5.00	U	ND< 5.00	U	ND< 5.00	U
1,2,4-Trichlorobenzene	5	ND< 5.00	U	ND< 5.00	U	ND< 5.00	U	ND< 5.00	U	ND< 5.00	U	ND< 5.00	U	ND< 5.00	U	ND< 5.00	U	ND< 5.00	U	ND< 5.00	U	ND< 5.00	U	ND< 5.00	U
1,2,4-Trimethylbenzene	5	ND< 2.00	U	ND< 2.00	U	ND< 2.00	U	ND< 2.00	U	ND< 2.00	U	ND< 2.00	U	ND< 2.00	U	ND< 2.00	U	ND< 2.00	U	ND< 2.00	U	ND< 2.00	U	ND< 2.00	U
1,2-Dibromo-3-Chloropropane	**0.04**	**ND< 10.0**	**U**	**ND< 10.0**	**U**	**ND< 10.0**	**U**	**ND< 10.0**	**U**	**ND< 10.0**	**U**	**ND< 10.0**	**U**	**ND< 10.0**	**U**	**ND< 10.0**	**U**	**ND< 10.0**	**U**	**ND< 10.0**	**U**	**ND< 10.0**	**U**	**ND< 10.0**	**U**
1,2-Dibromoethane (Ethylene Dibromide)	**0.0006**	**ND< 2.00**	**U**	**ND< 2.00**	**U**	**ND< 2.00**	**U**	**ND< 2.00**	**U**	**ND< 2.00**	**U**	**ND< 2.00**	**U**	**ND< 2.00**	**U**	**ND< 2.00**	**U**	**ND< 2.00**	**U**	**ND< 2.00**	**U**	**ND< 2.00**	**U**	**ND< 2.00**	**U**
1,2-Dichlorobenzene	3	ND< 2.00	U	ND< 2.00	U	ND< 2.00	U	ND< 2.00	U	ND< 2.00	U	ND< 2.00	U	ND< 2.00	U	ND< 2.00	U	ND< 2.00	U	ND< 2.00	U	ND< 2.00	U	ND< 2.00	U
1,2-Dichloroethane	**0.6**	**ND< 2.00**	**U**	**ND< 2.00**	**U**	**ND< 2.00**	**U**	**ND< 2.00**	**U**	**ND< 2.00**	**U**	**ND< 2.00**	**U**	**ND< 2.00**	**U**	**ND< 2.00**	**U**	**ND< 2.00**	**U**	**ND< 2.00**	**U**	**ND< 2.00**	**U**	**ND< 2.00**	**U**
1,2-Dichloropropane	**1**	**ND< 2.00**	**U**	**ND< 2.00**	**U**	**ND< 2.00**	**U**	**ND< 2.00**	**U**	**ND< 2.00**	**U**	**ND< 2.00**	**U**	**ND< 2.00**	**U**	**ND< 2.00**	**U**	**ND< 2.00**	**U**	**ND< 2.00**	**U**	**ND< 2.00**	**U**	**ND< 2.00**	**U**
1,3,5-Trimethylbenzene (Mesitylene)	5	ND< 2.00	U	ND< 2.00	U	ND< 2.00	U	ND< 2.00	U	ND< 2.00	U	ND< 2.00	U	ND< 2.00	U	ND< 2.00	U	ND< 2.00	U	ND< 2.00	U	ND< 2.00	U	ND< 2.00	U
1,3-Dichlorobenzene	3	ND< 2.00	U	ND< 2.00	U	ND< 2.00	U	ND< 2.00	U	ND< 2.00	U	ND< 2.00	U	ND< 2.00	U	ND< 2.00	U	ND< 2.00	U	ND< 2.00	U	ND< 2.00	U	ND< 2.00	U
1,4-Dichlorobenzene	3	ND< 2.00	U	ND< 2.00	U	ND< 2.00	U	ND< 2.00	U	ND< 2.00	U	ND< 2.00	U	ND< 2.00	U	ND< 2.00	U	ND< 2.00	U	ND< 2.00	U	ND< 2.00	U	ND< 2.00	U
1,4-Dioxane (P-Dioxane)		ND< 20.0	U	ND< 20.0	U	ND< 20.0	U	ND< 20.0	U	ND< 20.0	U	ND< 20.0	U	ND< 20.0	U	ND< 20.0	U	ND< 20.0	U	ND< 20.0	U	ND< 20.0	U	ND< 20.0	U
2-Hexanone	50	ND< 5.00	U	ND< 5.00	U	ND< 5.00	U	ND< 5.00	U	ND< 5.00	U	ND< 5.00	U	ND< 5.00	U	ND< 5.00	U	ND< 5.00	U	ND< 5.00	U	ND< 5.00	U	ND< 5.00	U
Acetone	50	7.44	J	ND< 10.0	U	ND< 10.0	U	10.6		7.21	J	5.53	J	5.90	J	ND< 10.0	U	ND< 10.0	U	ND< 10.0	U	ND< 10.0	U	9.50	J
Benzene	1	ND< 0.700	U	ND< 0.700	U	ND< 0.700	U	ND< 0.700	U	ND< 0.700	U	ND< 0.700	U	ND< 0.700	U	ND< 0.700	U	ND< 0.700	U	ND< 0.700	U	ND< 0.700	U	ND< 0.700	U
Bromochloromethane	5	ND< 5.00	U	ND< 5.00	U	ND< 5.00	U	ND< 5.00	U	ND< 5.00	U	ND< 5.00	U	ND< 5.00	U	ND< 5.00	U	ND< 5.00	U	ND< 5.00	U	ND< 5.00	U	ND< 5.00	U
Bromodichloromethane	50	ND< 2.00	U	ND< 2.00	U	ND< 2.00	U	ND< 2.00	U	ND< 2.00	U	ND< 2.00	U	ND< 2.00	U	ND< 2.00	U	ND< 2.00	U	ND< 2.00	U	ND< 2.00	U	ND< 2.00	U
Bromoform	50	ND< 5.00	U	ND< 5.00	U	ND< 5.00	U	ND< 5.00	U	ND< 5.00	U	ND< 5.00	U	ND< 5.00	U	ND< 5.00	U	ND< 5.00	U	ND< 5.00	U	ND< 5.00	U	ND< 5.00	U
Bromomethane	5	ND< 2.00	U	ND< 2.00	U	ND< 2.00	U	ND< 2.00	U	ND< 2.00	U	ND< 2.00	U	ND< 2.00	U	ND< 2.00	U	ND< 2.00	U	ND< 2.00	U	ND< 2.00	U	ND< 2.00	U
Carbon Disulfide	60	ND< 2.00	U	ND< 2.00	U	ND< 2.00	U	ND< 2.00	U	ND< 2.00	U	ND< 2.00	U	ND< 2.00	U	ND< 2.00	U	ND< 2.00	U	ND< 2.00	U	ND< 2.00	U	ND< 2.00	U
Carbon Tetrachloride	5	ND< 2.00	U	ND< 2.00	U	ND< 2.00	U	ND< 2.00	U	ND< 2.00	U	ND< 2.00	U	ND< 2.00	U	ND< 2.00	U	ND< 2.00	U	ND< 2.00	U	ND< 2.00	U	ND< 2.00	U
Chlorobenzene	5	ND< 2.00	U	ND< 2.00	U	ND< 2.00	U	ND< 2.00	U	ND< 2.00	U	ND< 2.00	U	ND< 2.00	U	ND< 2.00	U	ND< 2.00	U	ND< 2.00	U	ND< 2.00	U	ND< 2.00	U
Chloroethane	5	ND< 2.00	U	ND< 2.00	U	ND< 2.00	U	ND< 2.00	U	ND< 2.00	U	ND< 2.00	U	ND< 2.00	U	ND< 2.00	U	ND< 2.00	U	ND< 2.00	U	ND< 2.00	U	ND< 2.00	U
Chloroform	7	ND< 2.00	U	ND< 2.00	U	ND< 2.00	U	ND< 2.00	U	ND< 2.00	U	ND< 2.00	U	ND< 2.00	U	ND< 2.00	U	ND< 2.00	U	ND< 2.00	U	ND< 2.00	U	ND< 2.00	U
Chloromethane	5	ND< 2.00	U	ND< 2.00	U	ND< 2.00	U	ND< 2.00	U	ND< 2.00	U	ND< 2.00	U	ND< 2.00	U	ND< 2.00	U	ND< 2.00	U	ND< 2.00	U	ND< 2.00	U	ND< 2.00	U
Cis-1,2-Dichloroethylene	5	ND< 2.00	U	ND< 2.00	U	ND< 2.00	U	ND< 2.00	U	ND< 2.00	U	ND< 2.00	U	ND< 2.00	U	ND< 2.00	U	ND< 2.00	U	ND< 2.00	U	ND< 2.00	U	ND< 2.00	U
Cis-1,3-Dichloropropene	**0.4**	**ND< 2.00**	**U**	**ND< 2.00**	**U**	**ND< 2.00**	**U**	**ND< 2.00**	**U**	**ND< 2.00**	**U**	**ND< 2.00**	**U**	**ND< 2.00**	**U**	**ND< 2.00**	**U**	**ND< 2.00**	**U**	**ND< 2.00**	**U**	**ND< 2.00**	**U**	**ND< 2.00**	**U**
Cyclohexane		ND< 10.0	U	ND< 10.0	U	ND< 10.0	U	ND< 10.0	U	ND< 10.0	U	ND< 10.0	U	ND< 10.0	U	ND< 10.0	U	ND< 10.0	U	ND< 10.0	U	ND< 10.0	U	ND< 10.0	U
Cymene	5	ND< 2.00	U	ND< 2.00	U	ND< 2.00	U	ND< 2.00	U	ND< 2.00	U	ND< 2.00	U	ND< 2.00	U	ND< 2.00	U	ND< 2.00	U	ND< 2.00	U	ND< 2.00	U	ND< 2.00	U
Dibromochloromethane	50	ND< 2.00	U	ND< 2.00	U	ND< 2.00	U	ND< 2.00	U	ND< 2.00	U	ND< 2.00	U	ND< 2.00	U	ND< 2.00	U	ND< 2.00	U	ND< 2.00	U	ND< 2.00	U	ND< 2.00	U
Dichlorodifluoromethane	5	ND< 2.00	U	ND< 2.00	U	ND< 2.00	U	ND< 2.00	U	ND< 2.00	U	ND< 2.00	U	ND< 2.00	U	ND< 2.00	U	ND< 2.00	U	ND< 2.00	U	ND< 2.00	U	ND< 2.00	U
Ethylbenzene	5	ND< 2.00	U	ND< 2.00	U	ND< 2.00	U	ND< 2.00	U	ND< 2.00	U	ND< 2.00	U	ND< 2.00	U	ND< 2.00	U	ND< 2.00	U	ND< 2.00	U	ND< 2.00	U	ND< 2.00	U
Isopropylbenzene (Cumene)	5	ND< 2.00	U	ND< 2.00	U	ND< 2.00	U	ND< 2.00	U	ND< 2.00	U	ND< 2.00	U	ND< 2.00	U	ND< 2.00	U	ND< 2.00	U	ND< 2.00	U	ND< 2.00	U	ND< 2.00	U
Methyl Acetate		ND< 2.00	U	ND< 2.00	U	ND< 2.00	U	ND< 2.00	U	ND< 2.00	U	ND< 2.00	U	ND< 2.00	U	ND< 2.00	U	ND< 2.00	U	ND< 2.00	U	ND< 2.00	U	ND< 2.00	U
Methyl Ethyl Ketone (2-Butanone)	50	ND< 10.0	U	ND< 10.0	U	ND< 10.0	U	ND< 10.0	U	ND< 10.0	U	ND< 10.0	U	ND< 10.0	U	ND< 10.0	U	ND< 10.0	U	ND< 10.0	U	ND< 10.0	U	ND< 10.0	U
Methyl Isobutyl Ketone (4-Methyl-2-Pentanone)		ND< 5.00	U	ND< 5.00	U	ND< 5.00	U	ND< 5.00	U	ND< 5.00	U	ND< 5.00	U	ND< 5.00	U	ND< 5.00	U	ND< 5.00	U	ND< 5.00	U	ND< 5.00	U	ND< 5.00	U
Methyl Tert-Butyl Ether (MTBE)	10	ND< 2.00	U	ND< 2.00	U	ND< 2.00	U	ND< 2.00	U	ND< 2.00	U	ND< 2.00	U	ND< 2.00	U	ND< 2.00	U	ND< 2.00	U	ND< 2.00	U	ND< 2.00	U	ND< 2.00	U
Methylcyclohexane		ND< 2.00	U	ND< 2.00	U	ND< 2.00	U	ND< 2.00	U	ND< 2.00	U	ND< 2.00	U	ND< 2.00	U	ND< 2.00	U	ND< 2.00	U	ND< 2.00	U	ND< 2.00	U	ND< 2.00	U
Methylene Chloride	5	ND< 5.00	U	ND< 5.00	U	ND< 5.00	U	ND< 5.00	U	ND< 5.00	U	ND< 5.00	U	ND< 5.00	U	ND< 5.00	U	ND< 5.00	U	ND< 5.00	U	ND< 5.00	U	ND< 5.00	U
M-P-Xylene	5	ND< 2.00	U	ND< 2.00	U	ND< 2.00	U	ND< 2.00	U	ND< 2.00	U	ND< 2.00	U	ND< 2.00	U	ND< 2.00	U	ND< 2.00	U	ND< 2.00	U	ND< 2.00	U	ND< 2.00	U
Naphthalene	10	ND< 5.00	U	ND< 5.00	U	ND< 5.00	U	ND< 5.00	U	ND< 5.00	U	ND< 5.00	U	ND< 5.00	U	ND< 5.00	U	ND< 5.00	U	ND< 5.00	U	ND< 5.00	U	ND< 5.00	U
N-Butylbenzene	5	ND< 2.00	U	ND< 2.00	U	ND< 2.00	U	ND< 2.00	U	ND< 2.00	U	ND< 2.00	U	ND< 2.00	U	ND< 2.00	U	ND< 2.00	U	ND< 2.00	U	ND< 2.00	U	ND< 2.00	U
N-Propylbenzene	5	ND< 2.00	U	ND< 2.00	U	ND< 2.00	U	ND< 2.00	U	ND< 2.00	U	ND< 2.00	U	ND< 2.00	U	ND< 2.00	U	ND< 2.00	U	ND< 2.00	U	ND< 2.00	U	ND< 2.00	U
O-Xylene (1,2-Dimethylbenzene)	5	ND< 2.00	U	ND< 2.00	U	ND< 2.00	U	ND< 2.00	U	ND< 2.00	U	ND< 2.00	U	ND< 2.00	U	ND< 2.00	U	ND< 2.00	U	ND< 2.00	U	ND< 2.00	U	ND< 2.00	U
Sec-Butylbenzene	5	ND< 2.00	U	ND< 2.00	U	ND< 2.00	U	ND< 2.00	U	ND< 2.00	U	ND< 2.00	U	ND< 2.00	U	ND< 2.00	U	ND< 2.00	U	ND< 2.00	U	ND< 2.00	U	ND< 2.00	U
Styrene	5	ND< 5.00	U	ND< 5.00	U	ND< 5.00	U	ND< 5.00	U	ND< 5.00	U	ND< 5.00	U	ND< 5.00	U	ND< 5.00	U	ND< 5.00	U	ND< 5.00	U	ND< 5.00	U	ND< 5.00	U
T-Butylbenzene	5	ND< 2.00	U	ND< 2.00	U	ND< 2.00	U	ND< 2.00	U	ND< 2.00	U	ND< 2.00	U	ND< 2.00	U	ND< 2.00	U	ND< 2.00	U	ND< 2.00	U	ND< 2.00	U	ND< 2.00	U
Tetrachloroethylene (PCE)	5	ND< 2.00	U	ND< 2.00	U	ND< 2.00	U	ND< 2.00	U	ND< 2.00	U	ND< 2.00	U	ND< 2.00	U	ND< 2.00	U	ND< 2.00	U	ND< 2.00	U	ND< 2.00	U	ND< 2.00	U
Toluene	5	ND< 2.00	U	ND< 2.00	U	ND< 2.00	U	ND< 2.00	U	ND< 2.00	U	ND< 2.00	U	ND< 2.00	U	ND< 2.00	U	ND< 2.00	U	ND< 2.00	U	ND< 2.00	U	ND< 2.00	U
Trans-1,2-Dichloroethene	5	ND< 2.00	U	ND< 2.00	U	ND< 2.00	U	ND< 2.00	U	ND< 2.00	U	ND< 2.00	U	ND< 2.00	U	ND< 2.00	U	ND< 2.00	U	ND< 2.00	U	ND< 2.00	U	ND< 2.00	U
Trans-1,3-Dichloropropene	**0.4**	**ND< 2.00**	**U**	**ND< 2.00**	**U**	**ND< 2.00**	**U**	**ND< 2.00**	**U**	**ND< 2.00**	**U**	**ND< 2.00**	**U**	**ND< 2.00**	**U**	**ND< 2.00**	**U**	**ND< 2.00**	**U**	**ND< 2.00**	**U**	**ND< 2.00**	**U**	**ND< 2.00**	**U**
Trichloroethylene (TCE)	5	ND< 2.00	U	ND< 2.00	U	ND< 2.00	U	ND< 2.00	U	ND< 2.00	U	ND< 2.00	U	ND< 2.00	U	ND< 2.00	U	ND< 2.00	U	ND< 2.00	U	ND< 2.00	U	ND< 2.00	U
Trichlorofluoromethane	5	ND< 2.00	U	ND< 2.00	U	ND< 2.00	U	ND< 2.00	U	ND< 2.00	U	ND< 2.00	U	ND< 2.00	U	ND< 2.00	U	ND< 2.00	U	ND< 2.00	U	ND< 2.00	U	ND< 2.00	U
Vinyl Chloride	2	ND< 2.00	U	ND< 2.00	U	ND< 2.00	U	ND< 2.00	U	ND< 2.00	U	ND< 2.00	U	ND< 2.00	U	ND< 2.00	U	ND< 2.00	U	ND< 2.00	U	ND< 2.00	U	ND< 2.00	U

NOTES:

1. Groundwater sample analytical results are compared to the New York State Department of Environmental Conservation Technical and Operational Guidance Series 1.1.1 Ambient Water Quality Standards and guidance values for drinking water (CLASS GA) Codes, Rules, and Regulations.
2. CLASS GA exceedances are in bold and highlighted yellow.
3. ND = Not Detected
4. Results shown as "ND" with Reporting Limits exceeding CLASS GA values are in bold.
5. VOCs = Volatile Organic Compounds
6. µg/L = micrograms per liter
7. Qualifier (Q) definitions are provided in the official lab reports.

TABLE 10A: Volatile Organic Compounds (VOCs) in Groundwater
Groundwater Sample Results (non-QA/QC)
Hudson River Psychiatric Center - North BCP Site, Poughkeepsie, NY
PVE Sheffler File #560909

	Date Sampled	5/30/2014		5/30/2014		5/30/2014	
	Location	TMW-3		TMW-4		TMW-5	
	Sample ID	TMW-3 9-19'		TMW-4 10-20'		TMW-5 7-17'	
Analyte	CLASS GA	Result	Q	Result	Q	Result	Q
VOCs (µg/L)							
1,1,1-Trichloroethane	5	ND< 2.00	U	ND< 2.00	U	ND< 2.00	U
1,1,2,2-Tetrachloroethane	5	ND< 2.00	U	ND< 2.00	U	ND< 2.00	U
1,1,2-Trichloro-1,2,2-Trifluoroethane	5	ND< 2.00	U	ND< 2.00	U	ND< 2.00	U
1,1,2-Trichloroethane	**1**	**ND< 2.00**	**U**	**ND< 2.00**	**U**	**ND< 2.00**	**U**
1,1-Dichloroethane	5	ND< 2.00	U	ND< 2.00	U	ND< 2.00	U
1,1-Dichloroethene	5	ND< 2.00	U	ND< 2.00	U	ND< 2.00	U
1,2,3-Trichlorobenzene	5	ND< 5.00	U	ND< 5.00	U	ND< 5.00	U
1,2,4-Trichlorobenzene	5	ND< 5.00	U	ND< 5.00	U	ND< 5.00	U
1,2,4-Trimethylbenzene	5	ND< 2.00	U	ND< 2.00	U	ND< 2.00	U
1,2-Dibromo-3-Chloropropane	**0.04**	**ND< 10.0**	**U**	**ND< 10.0**	**U**	**ND< 10.0**	**U**
1,2-Dibromoethane (Ethylene Dibromide)	**0.0006**	**ND< 2.00**	**U**	**ND< 2.00**	**U**	**ND< 2.00**	**U**
1,2-Dichlorobenzene	3	ND< 2.00	U	ND< 2.00	U	ND< 2.00	U
1,2-Dichloroethane	**0.6**	**ND< 2.00**	**U**	**ND< 2.00**	**U**	**ND< 2.00**	**U**
1,2-Dichloropropane	**1**	**ND< 2.00**	**U**	**ND< 2.00**	**U**	**ND< 2.00**	**U**
1,3,5-Trimethylbenzene (Mesitylene)	5	ND< 2.00	U	ND< 2.00	U	ND< 2.00	U
1,3-Dichlorobenzene	3	ND< 2.00	U	ND< 2.00	U	ND< 2.00	U
1,4-Dichlorobenzene	3	ND< 2.00	U	ND< 2.00	U	ND< 2.00	U
1,4-Dioxane (P-Dioxane)		ND< 20.0	U	ND< 20.0	U	ND< 20.0	U
2-Hexanone	50	ND< 5.00	U	ND< 5.00	U	ND< 5.00	U
Acetone	50	ND< 10.0	U	14.5		ND< 10.0	U
Benzene	1	ND< 0.700	U	ND< 0.700	U	ND< 0.700	U
Bromochloromethane	5	ND< 5.00	U	ND< 5.00	U	ND< 5.00	U
Bromodichloromethane	50	ND< 2.00	U	ND< 2.00	U	ND< 2.00	U
Bromoform	50	ND< 5.00	U	ND< 5.00	U	ND< 5.00	U
Bromomethane	5	ND< 2.00	U	ND< 2.00	U	ND< 2.00	U
Carbon Disulfide	60	ND< 2.00	U	ND< 2.00	U	ND< 2.00	U
Carbon Tetrachloride	5	ND< 2.00	U	ND< 2.00	U	ND< 2.00	U
Chlorobenzene	5	ND< 2.00	U	ND< 2.00	U	ND< 2.00	U
Chloroethane	5	ND< 2.00	U	ND< 2.00	U	ND< 2.00	U
Chloroform	7	ND< 2.00	U	ND< 2.00	U	ND< 2.00	U
Chloromethane	5	ND< 2.00	U	ND< 2.00	U	ND< 2.00	U
Cis-1,2-Dichloroethylene	5	ND< 2.00	U	ND< 2.00	U	ND< 2.00	U
Cis-1,3-Dichloropropene	**0.4**	**ND< 2.00**	**U**	**ND< 2.00**	**U**	**ND< 2.00**	**U**
Cyclohexane		ND< 10.0	U	ND< 10.0	U	ND< 10.0	U
Cymene	5	ND< 2.00	U	ND< 2.00	U	ND< 2.00	U
Dibromochloromethane	50	ND< 2.00	U	ND< 2.00	U	ND< 2.00	U
Dichlorodifluoromethane	5	ND< 2.00	U	ND< 2.00	U	ND< 2.00	U
Ethylbenzene	5	ND< 2.00	U	ND< 2.00	U	ND< 2.00	U
Isopropylbenzene (Cumene)	5	ND< 2.00	U	ND< 2.00	U	ND< 2.00	U
Methyl Acetate		ND< 2.00	U	ND< 2.00	U	ND< 2.00	U
Methyl Ethyl Ketone (2-Butanone)	50	ND< 10.0	U	ND< 10.0	U	ND< 10.0	U
Methyl Isobutyl Ketone (4-Methyl-2-Pentanone)		ND< 5.00	U	ND< 5.00	U	ND< 5.00	U
Methyl Tert-Butyl Ether (MTBE)	10	ND< 2.00	U	ND< 2.00	U	ND< 2.00	U
Methylcyclohexane		ND< 2.00	U	ND< 2.00	U	ND< 2.00	U
Methylene Chloride	5	ND< 5.00	U	ND< 5.00	U	ND< 5.00	U
M-P-Xylene	5	ND< 2.00	U	ND< 2.00	U	ND< 2.00	U
Naphthalene	10	ND< 5.00	U	ND< 5.00	U	ND< 5.00	U
N-Butylbenzene	5	ND< 2.00	U	ND< 2.00	U	ND< 2.00	U
N-Propylbenzene	5	ND< 2.00	U	ND< 2.00	U	ND< 2.00	U
O-Xylene (1,2-Dimethylbenzene)	5	ND< 2.00	U	ND< 2.00	U	ND< 2.00	U
Sec-Butylbenzene	5	ND< 2.00	U	ND< 2.00	U	ND< 2.00	U
Styrene	5	ND< 5.00	U	ND< 5.00	U	ND< 5.00	U
T-Butylbenzene	5	ND< 2.00	U	ND< 2.00	U	ND< 2.00	U
Tetrachloroethylene (PCE)	5	ND< 2.00	U	ND< 2.00	U	ND< 2.00	U
Toluene	5	ND< 2.00	U	ND< 2.00	U	ND< 2.00	U
Trans-1,2-Dichloroethene	5	ND< 2.00	U	ND< 2.00	U	ND< 2.00	U
Trans-1,3-Dichloropropene	**0.4**	**ND< 2.00**	**U**	**ND< 2.00**	**U**	**ND< 2.00**	**U**
Trichloroethylene (TCE)	5	ND< 2.00	U	ND< 2.00	U	ND< 2.00	U
Trichlorofluoromethane	5	ND< 2.00	U	ND< 2.00	U	ND< 2.00	U
Vinyl Chloride	2	ND< 2.00	U	ND< 2.00	U	ND< 2.00	U

NOTES:

1. Groundwater sample analytical results are compared to the New York State Department of Environmental Conservation Technical and Operational Guidance Series 1.1.1 Ambient Water Quality Standards and guidance values for drinking water (CLASS GA) Codes, Rules, and Regulations.
2. CLASS GA exceedances are in bold and highlighted yellow.
3. ND = Not Detected
4. Results shown as "ND" with Reporting Limits exceeding CLASS GA values are in bold.
5. VOCs = Volatile Organic Compounds
6. µg/L = micrograms per liter
7. Qualifier (Q) definitions are provided in the official lab reports.

Table 10B – SVOCs in Groundwater

TABLE 10B: Semi-Volatile Organic Compounds (SVOCs) in Groundwater
Groundwater Sample Results (non-QA/QC)
Hudson River Psychiatric Center - North BCP Site, Poughkeepsie, NY
PVE Sheffler File #560909

	Date Sampled	6/4/2014		12/29/2014		7/28/2014		7/28/2014		6/4/2014		12/29/2014		6/5/2014		6/4/2014		12/17/2014		5/30/2014		12/17/2014		7/28/2014		12/29/2014		12/30/2014	
	Location	MW-PH-1		MW-PH-1		MW-PH-2		MW-PH-3		MW-AG-1		MW-AG-1		MW-AG-2		MW-CW-2		MW-CW-2		MW-FS-1		MW-FS-1		MW-FD-1		MW-FD-1		MW-MRT-1	
	Sample ID	MW-PH-1 7-17'		MW-PH-1		MW-PH-2, 6-16'		MW-PH-3, 8-18'		MW-AG-1 10-20'		MW-AG-1		MW-AG-2 5-15'		MW-CW-2 18-28'		MW-CW-2		MW-FS-1 20-30'		MW-FS-1		MW-FD-1 15-25'		MW-FD-1		MW-MRT-1	
Analyte	CLASS GA	Result	Q	Result	Q	Result	Q	Result	Q	Result	Q	Result	Q	Result	Q	Result	Q	Result	Q	Result	Q	Result	Q	Result	Q	Result	Q	Result	Q
SVOCs (µg/L)																													
1,2,4,5-Tetrachlorobenzene	5	ND< 10.0	U	ND< 5.00	U	ND< 10.0	U	ND< 10.0	U	ND< 10.0	U	ND< 5.00	U	ND< 10.0	U	ND< 10.0	U	ND< 5.00	U	ND< 10.0	U	ND< 5.62	U	ND< 10.0	U	ND< 5.00	U	ND< 5.00	U
1,2,4-Trichlorobenzene	5	ND< 10.0	U	ND< 5.00	U	ND< 10.0	U	ND< 10.0	U	ND< 10.0	U	ND< 5.00	U	ND< 10.0	U	ND< 10.0	U	ND< 5.00	U	ND< 10.0	U	ND< 5.62	U	ND< 10.0	U	ND< 5.00	U	ND< 5.00	U
1,2-Dichlorobenzene	3	ND< 10.0	U	ND< 5.00	U	ND< 10.0	U	ND< 10.0	U	ND< 10.0	U	ND< 5.00	U	ND< 10.0	U	ND< 10.0	U	ND< 5.00	U	ND< 10.0	U	ND< 5.62	U	ND< 10.0	U	ND< 5.00	U	ND< 5.00	U
1,3-Dichlorobenzene	3	ND< 10.0	U	ND< 5.00	U	ND< 10.0	U	ND< 10.0	U	ND< 10.0	U	ND< 5.00	U	ND< 10.0	U	ND< 10.0	U	ND< 5.00	U	ND< 10.0	U	ND< 5.62	U	ND< 10.0	U	ND< 5.00	U	ND< 5.00	U
1,4-Dichlorobenzene	3	ND< 10.0	U	ND< 5.00	U	ND< 10.0	U	ND< 10.0	U	ND< 10.0	U	ND< 5.00	U	ND< 10.0	U	ND< 10.0	U	ND< 5.00	U	ND< 10.0	U	ND< 5.62	U	ND< 10.0	U	ND< 5.00	U	ND< 5.00	U
2,2-Oxybis(2-Chloropropane)		ND< 10.0	U	ND< 5.00	U	ND< 10.0	U	ND< 10.0	U	ND< 10.0	U	ND< 5.00	U	ND< 10.0	U	ND< 10.0	U	ND< 5.00	U	ND< 10.0	U	ND< 5.62	U	ND< 10.0	U	ND< 5.00	U	ND< 5.00	U
2,3,4,6-Tetrachlorophenol		ND< 10.0	U	ND< 5.00	U	ND< 10.0	U	ND< 10.0	U	ND< 10.0	U	ND< 5.00	U	ND< 10.0	U	ND< 10.0	U	ND< 5.00	U	ND< 10.0	U	ND< 5.62	U	ND< 10.0	U	ND< 5.00	U	ND< 5.00	U
2,4,5-Trichlorophenol		ND< 20.0	U	ND< 10.0	U	ND< 20.0	U	ND< 20.0	U	ND< 20.0	U	ND< 10.0	U	ND< 20.0	U	ND< 20.0	U	ND< 10.0	U	ND< 20.0	U	ND< 11.2	U	ND< 20.0	U	ND< 10.0	U	ND< 10.0	U
2,4,6-Trichlorophenol		ND< 10.0	U	ND< 5.00	U	ND< 10.0	U	ND< 10.0	U	ND< 10.0	U	ND< 5.00	U	ND< 10.0	U	ND< 10.0	U	ND< 5.00	U	ND< 10.0	U	ND< 5.62	U	ND< 10.0	U	ND< 5.00	U	ND< 5.00	U
2,4-Dichlorophenol	1	ND< 10.0	U	ND< 5.00	U	ND< 10.0	U	ND< 10.0	U	ND< 10.0	U	ND< 5.00	U	ND< 10.0	U	ND< 10.0	U	ND< 5.00	U	ND< 10.0	U	ND< 5.62	U	ND< 10.0	U	ND< 5.00	U	ND< 5.00	U
2,4-Dimethylphenol	5	ND< 10.0	U	ND< 5.00	U	ND< 10.0	U	ND< 10.0	U	ND< 10.0	U	ND< 5.00	U	ND< 10.0	U	ND< 10.0	U	ND< 5.00	U	ND< 10.0	U	ND< 5.62	U	ND< 10.0	U	ND< 5.00	U	ND< 5.00	U
2,4-Dinitrophenol	1	ND< 20.0	U	ND< 10.0	U	ND< 20.0	U	ND< 20.0	U	ND< 20.0	U	ND< 10.0	U	ND< 20.0	U	ND< 20.0	U	ND< 10.0	U	ND< 20.0	U	ND< 11.2	U	ND< 20.0	U	ND< 10.0	U	ND< 10.0	U
2,4-Dinitrotoluene	5	ND< 10.0	U	ND< 5.00	U	ND< 10.0	U	ND< 10.0	U	ND< 10.0	U	ND< 5.00	U	ND< 10.0	U	ND< 10.0	U	ND< 5.00	U	ND< 10.0	U	ND< 5.62	U	ND< 10.0	U	ND< 5.00	U	ND< 5.00	U
2,6-Dinitrotoluene	5	ND< 10.0	U	ND< 5.00	U	ND< 10.0	U	ND< 10.0	U	ND< 10.0	U	ND< 5.00	U	ND< 10.0	U	ND< 10.0	U	ND< 5.00	U	ND< 10.0	U	ND< 5.62	U	ND< 10.0	U	ND< 5.00	U	ND< 5.00	U
2-Chloronaphthalene	10	ND< 10.0	U	ND< 5.00	U	ND< 10.0	U	ND< 10.0	U	ND< 10.0	U	ND< 5.00	U	ND< 10.0	U	ND< 10.0	U	ND< 5.00	U	ND< 10.0	U	ND< 5.62	U	ND< 10.0	U	ND< 5.00	U	ND< 5.00	U
2-Chlorophenol		ND< 10.0	U	ND< 5.00	U	ND< 10.0	U	ND< 10.0	U	ND< 10.0	U	ND< 5.00	U	ND< 10.0	U	ND< 10.0	U	ND< 5.00	U	ND< 10.0	U	ND< 5.62	U	ND< 10.0	U	ND< 5.00	U	ND< 5.00	U
2-Methylnaphthalene		ND< 10.0	U	ND< 5.00	U	ND< 10.0	U	ND< 10.0	U	ND< 10.0	U	ND< 5.00	U	ND< 10.0	U	ND< 10.0	U	ND< 5.00	U	ND< 10.0	U	ND< 5.62	U	ND< 10.0	U	ND< 5.00	U	ND< 5.00	U
2-Methylphenol (O-Cresol)		ND< 10.0	U	ND< 5.00	U	ND< 10.0	U	ND< 10.0	U	ND< 10.0	U	ND< 5.00	U	ND< 10.0	U	ND< 10.0	U	ND< 5.00	U	ND< 10.0	U	ND< 5.62	U	ND< 10.0	U	ND< 5.00	U	ND< 5.00	U
2-Nitroaniline	5	ND< 20.0	U	ND< 10.0	U	ND< 20.0	U	ND< 20.0	U	ND< 20.0	U	ND< 10.0	U	ND< 20.0	U	ND< 20.0	U	ND< 10.0	U	ND< 20.0	U	ND< 11.2	U	ND< 20.0	U	ND< 10.0	U	ND< 10.0	U
2-Nitrophenol		ND< 10.0	U	ND< 5.00	U	ND< 10.0	U	ND< 10.0	U	ND< 10.0	U	ND< 5.00	U	ND< 10.0	U	ND< 10.0	U	ND< 5.00	U	ND< 10.0	U	ND< 5.62	U	ND< 10.0	U	ND< 5.00	U	ND< 5.00	U
3,3'-Dichlorobenzidine	5	ND< 10.0	U	ND< 5.00	U	ND< 10.0	U	ND< 10.0	U	ND< 10.0	U	ND< 5.00	U	ND< 10.0	U	ND< 10.0	U	ND< 5.00	U	ND< 10.0	U	ND< 5.62	U	ND< 10.0	U	ND< 5.00	U	ND< 5.00	U
3-Methylphenol		ND< 10.0	U	ND< 5.00	U	ND< 10.0	U	ND< 10.0	U	ND< 10.0	U	ND< 5.00	U	ND< 10.0	U	ND< 10.0	U	ND< 5.00	U	ND< 10.0	U	ND< 5.62	U	ND< 10.0	U	ND< 5.00	U	ND< 5.00	U
3-Nitroaniline	5	ND< 20.0	U	ND< 10.0	U	ND< 20.0	U	ND< 20.0	U	ND< 20.0	U	ND< 10.0	U	ND< 20.0	U	ND< 20.0	U	ND< 10.0	U	ND< 20.0	U	ND< 11.2	U	ND< 20.0	U	ND< 10.0	U	ND< 10.0	U
4,6-Dinitro-2-Methylphenol		ND< 20.0	U	ND< 10.0	U	ND< 20.0	U	ND< 20.0	U	ND< 20.0	U	ND< 10.0	U	ND< 20.0	U	ND< 20.0	U	ND< 10.0	U	ND< 20.0	U	ND< 11.2	U	ND< 20.0	U	ND< 10.0	U	ND< 10.0	U
4-Bromophenyl Phenyl Ether		ND< 10.0	U	ND< 5.00	U	ND< 10.0	U	ND< 10.0	U	ND< 10.0	U	ND< 5.00	U	ND< 10.0	U	ND< 10.0	U	ND< 5.00	U	ND< 10.0	U	ND< 5.62	U	ND< 10.0	U	ND< 5.00	U	ND< 5.00	U
4-Chloro-3-Methylphenol		ND< 10.0	U	ND< 5.00	U	ND< 10.0	U	ND< 10.0	U	ND< 10.0	U	ND< 5.00	U	ND< 10.0	U	ND< 10.0	U	ND< 5.00	U	ND< 10.0	U	ND< 5.62	U	ND< 10.0	U	ND< 5.00	U	ND< 5.00	U
4-Chloroaniline	5	ND< 10.0	U	ND< 5.00	U	ND< 10.0	U	ND< 10.0	U	ND< 10.0	U	ND< 5.00	U	ND< 10.0	U	ND< 10.0	U	ND< 5.00	U	ND< 10.0	U	ND< 5.62	U	ND< 10.0	U	ND< 5.00	U	ND< 5.00	U
4-Chlorophenyl Phenyl Ether		ND< 10.0	U	ND< 5.00	U	ND< 10.0	U	ND< 10.0	U	ND< 10.0	U	ND< 5.00	U	ND< 10.0	U	ND< 10.0	U	ND< 5.00	U	ND< 10.0	U	ND< 5.62	U	ND< 10.0	U	ND< 5.00	U	ND< 5.00	U
4-Nitroaniline	5	ND< 20.0	U	ND< 10.0	U	ND< 20.0	U	ND< 20.0	U	ND< 20.0	U	ND< 10.0	U	ND< 20.0	U	ND< 20.0	U	ND< 10.0	U	ND< 20.0	U	ND< 11.2	U	ND< 20.0	U	ND< 10.0	U	ND< 10.0	U
4-Nitrophenol		ND< 20.0	U	ND< 10.0	U	ND< 20.0	U	ND< 20.0	U	ND< 20.0	U	ND< 10.0	U	ND< 20.0	U	ND< 20.0	U	ND< 10.0	U	ND< 20.0	U	ND< 11.2	U	ND< 20.0	U	ND< 10.0	U	ND< 10.0	U
Acenaphthene	20	ND< 10.0	U	ND< 5.00	U	ND< 10.0	U	ND< 10.0	U	ND< 10.0	U	ND< 5.00	U	ND< 10.0	U	ND< 10.0	U	ND< 5.00	U	ND< 10.0	U	ND< 5.62	U	ND< 10.0	U	ND< 5.00	U	ND< 5.00	U
Acenaphthylene		ND< 10.0	U	ND< 5.00	U	ND< 10.0	U	ND< 10.0	U	ND< 10.0	U	ND< 5.00	U	ND< 10.0	U	ND< 10.0	U	ND< 5.00	U	ND< 10.0	U	ND< 5.62	U	ND< 10.0	U	ND< 5.00	U	ND< 5.00	U
Acetophenone		ND< 10.0	U	ND< 5.00	U	ND< 10.0	U	ND< 10.0	U	ND< 10.0	U	ND< 5.00	U	ND< 10.0	U	ND< 10.0	U	ND< 5.00	U	ND< 10.0	U	ND< 5.62	U	ND< 10.0	U	ND< 5.00	U	ND< 5.00	U
Anthracene		ND< 10.0	U	ND< 5.00	U	ND< 10.0	U	ND< 10.0	U	ND< 10.0	U	ND< 5.00	U	ND< 10.0	U	ND< 10.0	U	ND< 5.00	U	ND< 10.0	U	ND< 5.62	U	ND< 10.0	U	ND< 5.00	U	ND< 5.00	U
Atrazine	7.5	ND< 10.0	U	ND< 5.00	U	ND< 10.0	U	ND< 10.0	U	ND< 10.0	U	ND< 5.00	U	ND< 10.0	U	ND< 10.0	U	ND< 5.00	U	ND< 10.0	U	ND< 5.62	U	ND< 10.0	U	ND< 5.00	U	ND< 5.00	U
Benzaldehyde		ND< 10.0	U	ND< 5.00	U	ND< 10.0	U	ND< 10.0	U	ND< 10.0	U	ND< 5.00	U	ND< 10.0	U	ND< 10.0	U	ND< 5.00	U	ND< 10.0	U	ND< 5.62	U	ND< 10.0	U	ND< 5.00	U	ND< 5.00	U
Benzo(A)Anthracene	0.002	ND< 10.0	U	ND< 5.00	U	ND< 10.0	U	ND< 10.0	U	ND< 10.0	U	ND< 5.00	U	ND< 10.0	U	ND< 10.0	U	ND< 5.00	U	ND< 10.0	U	ND< 5.62	U	ND< 10.0	U	ND< 5.00	U	ND< 5.00	U
Benzo(A)Pyrene	0	ND< 10.0	U	ND< 5.00	U	ND< 10.0	U	ND< 10.0	U	ND< 10.0	U	ND< 5.00	U	ND< 10.0	U	ND< 10.0	U	ND< 5.00	U	ND< 10.0	U	ND< 5.62	U	ND< 10.0	U	ND< 5.00	U	ND< 5.00	U
Benzo(B)Fluoranthene	0.002	ND< 10.0	U	ND< 5.00	U	ND< 10.0	U	ND< 10.0	U	ND< 10.0	U	ND< 5.00	U	ND< 10.0	U	ND< 10.0	U	ND< 5.00	U	ND< 10.0	U	ND< 5.62	U	ND< 10.0	U	ND< 5.00	U	ND< 5.00	U
Benzo(G,H,I)Perylene		ND< 10.0	U	ND< 5.00	U	ND< 10.0	U	ND< 10.0	U	ND< 10.0	U	ND< 5.00	U	ND< 10.0	U	ND< 10.0	U	ND< 5.00	U	ND< 10.0	U	ND< 5.62	U	ND< 10.0	U	ND< 5.00	U	ND< 5.00	U
Benzo(K)Fluoranthene	0.002	ND< 10.0	U	ND< 5.00	U	ND< 10.0	U	ND< 10.0	U	ND< 10.0	U	ND< 5.00	U	ND< 10.0	U	ND< 10.0	U	ND< 5.00	U	ND< 10.0	U	ND< 5.62	U	ND< 10.0	U	ND< 5.00	U	ND< 5.00	U
Benzyl Butyl Phthalate	50	ND< 10.0	U	ND< 5.00	U	ND< 10.0	U	ND< 10.0	U	ND< 10.0	U	ND< 5.00	U	ND< 10.0	U	ND< 10.0	U	ND< 5.00	U	ND< 10.0	U	ND< 5.62	U	ND< 10.0	U	ND< 5.00	U	ND< 5.00	U
Biphenyl (Diphenyl)	5	ND< 10.0	U	ND< 5.00	U	ND< 10.0	U	ND< 10.0	U	ND< 10.0	U	ND< 5.00	U	ND< 10.0	U	ND< 10.0	U	ND< 5.00	U	ND< 10.0	U	ND< 5.62	U	ND< 10.0	U	ND< 5.00	U	ND< 5.00	U
Bis(2-Chloroethoxy) Methane	5	ND< 10.0	U	ND< 5.00	U	ND< 10.0	U	ND< 10.0	U	ND< 10.0	U	ND< 5.00	U	ND< 10.0	U	ND< 10.0	U	ND< 5.00	U	ND< 10.0	U	ND< 5.62	U	ND< 10.0	U	ND< 5.00	U	ND< 5.00	U
Bis(2-Chloroethyl) Ether (2-Chloroethyl Ether)	1	ND< 10.0	U	ND< 5.00	U	ND< 10.0	U	ND< 10.0	U	ND< 10.0	U	ND< 5.00	U	ND< 10.0	U	ND< 10.0	U	ND< 5.00	U	ND< 10.0	U	ND< 5.62	U	ND< 10.0	U	ND< 5.00	U	ND< 5.00	U
Bis(2-Ethylhexyl) Phthalate	5	ND< 10.0	U	ND< 5.00	U	ND< 10.0	U	ND< 10.0	U	ND< 10.0	U	ND< 5.00	U	ND< 10.0	U	7.95	J	ND< 5.00	U	8.91	J	ND< 5.62	U	ND< 10.0	U	ND< 5.00	U	ND< 5.00	U
Caprolactam		ND< 10.0	U	ND< 5.00	U	ND< 10.0	U	ND< 10.0	U	ND< 10.0	U	ND< 5.00	U	ND< 10.0	U	ND< 10.0	U	ND< 5.00	U	ND< 10.0	U	ND< 5.62	U	ND< 10.0	U	ND< 5.00	U	ND< 5.00	U
Carbazole		ND< 10.0	U	ND< 5.00	U	ND< 10.0	U	ND< 10.0	U	ND< 10.0	U	ND< 5.00	U	ND< 10.0	U	ND< 10.0	U	ND< 5.00	U	ND< 10.0	U	ND< 5.62	U	ND< 10.0	U	ND< 5.00	U	ND< 5.00	U
Chrysene	0.002	ND< 10.0	U	ND< 5.00	U	ND< 10.0	U	ND< 10.0	U	ND< 10.0	U	ND< 5.00	U	ND< 10.0	U	ND< 10.0	U	ND< 5.00	U	ND< 10.0	U	ND< 5.62	U	ND< 10.0	U	ND< 5.00	U	ND< 5.00	U
Dibenz(A,H)Anthracene		ND< 10.0	U	ND< 5.00	U	ND< 10.0	U	ND< 10.0	U	ND< 10.0	U	ND< 5.00	U	ND< 10.0	U	ND< 10.0	U	ND< 5.00	U	ND< 10.0	U	ND< 5.62	U	ND< 10.0	U	ND< 5.00	U	ND< 5.00	U
Dibenzofuran		ND< 10.0	U	ND< 5.00	U	ND< 10.0	U	ND< 10.0	U	ND< 10.0	U	ND< 5.00	U	ND< 10.0	U	ND< 10.0	U	ND< 5.00	U	ND< 10.0	U	ND< 5.62	U	ND< 10.0	U	ND< 5.00	U	ND< 5.00	U
Diethyl Phthalate	50	ND< 10.0	U	ND< 5.00	U	ND< 10.0	U	ND< 10.0	U	ND< 10.0	U	ND< 5.00	U	ND< 10.0	U	ND< 10.0	U	ND< 5.00	U	ND< 10.0	U	ND< 5.62	U	ND< 10.0	U	ND< 5.00	U	ND< 5.00	U
Dimethyl Phthalate	50	ND< 20.0	U	ND< 10.0	U	ND< 20.0	U	ND< 20.0	U	ND< 20.0	U	ND< 10.0	U	ND< 20.0	U	ND< 20.0	U	ND< 10.0	U	ND< 20.0	U	ND< 11.2	U	ND< 20.0	U	ND< 10.0	U	ND< 10.0	U
Di-N-Butyl Phthalate	50	ND< 10.0	U	ND< 5.00	U	ND< 10.0	U	ND< 10.0	U	ND< 10.0	U	ND< 5.00	U	ND< 10.0	U	ND< 10.0	U	ND< 5.00	U	ND< 10.0	U	ND< 5.62	U	ND< 10.0	U	ND< 5.00	U	ND< 5.00	U
Di-N-Octylphthalate	50	ND< 10.0	U	ND< 5.00	U	ND< 10.0	U	ND< 10.0	U	ND< 10.0	U	ND< 5.00	U	ND< 10.0	U	ND< 10.0	U	ND< 5.00	U	ND< 10.0	U	ND< 5.62	U	ND< 10.0	U	ND< 5.00	U	ND< 5.00	U
Fluoranthene	50	ND< 10.0	U	ND< 5.00	U	ND< 10.0	U	ND< 10.0	U	ND< 10.0	U	ND< 5.00	U	ND< 10.0	U	ND< 10.0	U	ND< 5.00	U	ND< 10.0	U	ND< 5.62	U	ND< 10.0	U	ND< 5.00	U	ND< 5.00	U
Fluorene	50	ND< 10.0	U	ND< 5.00	U	ND< 10.0	U	ND< 10.0	U	ND< 10.0	U	ND< 5.00	U	ND< 10.0	U	ND< 10.0	U	ND< 5.00	U	ND< 10.0	U	ND< 5.62	U	ND< 10.0	U	ND< 5.00	U	ND< 5.00	U
Hexachlorobenzene	0.04	ND< 10.0	U	ND< 5.00	U	ND< 10.0	U	ND< 10.0	U	ND< 10.0	U	ND< 5.00	U	ND< 10.0	U	ND< 10.0	U	ND< 5.00	U	ND< 10.0	U	ND< 5.62	U	ND< 10.0	U	ND< 5.00	U	ND< 5.00	U
Hexachlorobutadiene	0.5	ND< 10.0	U	ND< 5.00	U	ND< 10.0	U	ND< 10.0	U	ND< 10.0	U	ND< 5.00	U	ND< 10.0	U	ND< 10.0	U	ND< 5.00	U	ND< 10.0	U	ND< 5.62	U	ND< 10.0	U	ND< 5.00	U	ND< 5.00	U
Hexachlorocyclopentadiene	5	ND< 10.0	U	ND< 5.00	U	ND< 10.0	U	ND< 10.0	U	ND< 10.0	U	ND< 5.00	U	ND< 10.0	U	ND< 10.0	U	ND< 5.00	U	ND< 10.0	U	ND< 5.62	U	ND< 10.0	U	ND< 5.00	U	ND< 5.00	U
Hexachloroethane	5	ND< 10.0	U	ND< 5.00	U	ND< 10.0	U	ND< 10.0	U	ND< 10.0	U	ND< 5.00	U	ND< 10.0	U	ND< 10.0	U	ND< 5.00	U	ND< 10.0	U	ND< 5.62	U	ND< 10.0	U	ND< 5.00	U	ND< 5.00	U
Indeno(1,2,3-C,D)Pyrene	0.002	ND< 10.0	U	ND< 5.00	U	ND< 10.0	U	ND< 10.0	U	ND< 10.0	U	ND< 5.00	U	ND< 10.0	U	ND< 10.0	U	ND< 5.00	U	ND< 10.0	U	ND< 5.62	U	ND< 10.0	U	ND< 5.00	U	ND< 5.00	U
Isophorone	50	ND< 10.0	U	ND< 5.00	U	ND< 10.0	U	ND< 10.0	U	ND< 10.0	U	ND< 5.00	U	ND< 10.0	U	ND< 10.0	U	ND< 5.00	U	ND< 10.0	U	ND< 5.62	U	ND< 10.0	U	ND< 5.00	U	ND< 5.00	U
Naphthalene	10	ND< 10.0	U	ND< 5.00	U	ND< 10.0	U	ND< 10.0	U	ND< 10.0	U	ND< 5.00	U	ND< 10.0	U	ND< 10.0	U	ND< 5.00	U	ND< 10.0	U	ND< 5.62	U	ND< 10.0	U	ND< 5.00	U	ND< 5.00	U
Nitrobenzene	0.4	ND< 10.0	U	ND< 5.00	U	ND< 10.0	U	ND< 10.0	U	ND< 10.0	U	ND< 5.00	U	ND< 10.0	U	ND< 10.0	U	ND< 5.00	U	ND< 10.0	U	ND< 5.62	U	ND< 10.0	U	ND< 5.00	U	ND< 5.00	U
N-Nitrosodi-N-Propylamine		ND< 10.0	U	ND< 5.00	U	ND< 10.0	U	ND< 10.0	U	ND< 10.0	U	ND< 5.00	U	ND< 10.0	U	ND< 10.0	U	ND< 5.00	U	ND< 10.0	U	ND< 5.62	U	ND< 10.0	U	ND< 5.00	U	ND< 5.00	U
N-Nitrosodiphenylamine	50	ND< 10.0	U	ND< 5.00	U	ND< 10.0	U	ND< 10.0	U	ND< 10.0	U	ND< 5.00	U	ND< 10.0	U	ND< 10.0	U	ND< 5.00	U	ND< 10.0	U	ND< 5.62	U	ND< 10.0	U	ND< 5.00	U	ND< 5.00	U
Pentachlorophenol	1.5	ND< 20.0	U	ND< 10.0	U	ND< 20.0	U	ND< 20.0	U	ND< 20.0	U	ND< 10.0	U	ND< 20.0	U	ND< 20.0	U	ND< 10.0	U	ND< 20.0	U	ND< 11.2	U	ND< 20.0	U	ND< 10.0	U	ND< 10.0	U
Phenanthrene	50	ND< 10.0	U	ND< 5.00	U	ND< 10.0	U	ND< 10.0	U	ND< 10.0	U	ND< 5.00	U	ND< 10.0	U	ND< 10.0	U	ND< 5.00	U	ND< 10.0	U	ND< 5.62	U	ND< 10.0	U	ND< 5.00	U	ND< 5.00	U
Phenol	1	ND< 10.0	U	ND< 5.00	U	ND< 10.0	U	ND< 10.0	U	ND< 10.0	U	ND< 5.00	U	ND< 10.0	U	ND< 10.0	U	ND< 5.00	U	ND< 10.0	U	ND< 5.62	U	ND< 10.0	U	ND< 5.00	U	ND< 5.00	U
Pyrene	50	ND< 10.0	U	ND< 5.00	U	ND< 10.0	U	ND< 10.0	U	ND< 10.0	U	ND< 5.00	U	ND< 10.0	U	ND< 10.0	U	ND< 5.00	U	ND< 10.0	U	ND< 5.62	U	ND< 10.0	U	ND< 5.00	U	ND< 5.00	U

NOTES:

1. Groundwater sample analytical results are compared to the New York State Department of Environmental Conservation Technical and Operational Guidance Series 1.1.1 Ambient Water Quality Standards and guidance values for drinking water (CLASS GA) Codes, Rules, and Regulations.
2. CLASS GA exceedances are in bold and highlighted yellow.
3. ND = Not Detected
4. Results shown as "ND" with Reporting Limits exceeding CLASS GA values are in bold.
5. SVOCs = Semi-Volatile Organic Compounds
6. µg/L = micrograms per liter
7. Qualifier (Q) definitions are provided in the official lab reports.

TABLE 10B: Semi-Volatile Organic Compounds (SVOCs) in Groundwater
Groundwater Sample Results (non-QA/QC)
Hudson River Psychiatric Center - North BCP Site, Poughkeepsie, NY
PVE Sheffler File #560909

	Date Sampled	12/30/2014		7/28/2014		6/4/2014		5/30/2014		6/4/2014		6/4/2014	
	Location	MW-MNTC-1		TMW-1R		TMW-2		TMW-3		TMW-4		TMW-5	
	Sample ID	MW-MNTC-1		TMW-1R 28.5-38.5		TMW-2 22-32'		TMW-3 9-19'		TMW-4 10-20'		TMW-5 10-20'	
Analyte	CLASS GA	Result	Q	Result	Q	Result	Q	Result	Q	Result	Q	Result	Q
SVOCs (µg/L)													
1,2,4,5-Tetrachlorobenzene	**5**	ND< 5.00	U	**ND< 10.0**	**U**	**ND< 10.0**	**U**	**ND< 10.0**	**U**	**ND< 10.0**	**U**	**ND< 10.0**	**U**
1,2,4-Trichlorobenzene	**5**	ND< 5.00	U	**ND< 10.0**	**U**	**ND< 10.0**	**U**	**ND< 10.0**	**U**	**ND< 10.0**	**U**	**ND< 10.0**	**U**
1,2-Dichlorobenzene	**3**	**ND< 5.00**	**U**	**ND< 10.0**	**U**	**ND< 10.0**	**U**	**ND< 10.0**	**U**	**ND< 10.0**	**U**	**ND< 10.0**	**U**
1,3-Dichlorobenzene	**3**	**ND< 5.00**	**U**	**ND< 10.0**	**U**	**ND< 10.0**	**U**	**ND< 10.0**	**U**	**ND< 10.0**	**U**	**ND< 10.0**	**U**
1,4-Dichlorobenzene	**3**	**ND< 5.00**	**U**	**ND< 10.0**	**U**	**ND< 10.0**	**U**	**ND< 10.0**	**U**	**ND< 10.0**	**U**	**ND< 10.0**	**U**
2,2-Oxybis(2-Chloropropane)		ND< 5.00	U	ND< 10.0	U	ND< 10.0	U	ND< 10.0	U	ND< 10.0	U	ND< 10.0	U
2,3,4,6-Tetrachlorophenol		ND< 5.00	U	ND< 10.0	U	ND< 10.0	U	ND< 10.0	U	ND< 10.0	U	ND< 10.0	U
2,4,5-Trichlorophenol		ND< 10.0	U	ND< 20.0	U	ND< 20.0	U	ND< 20.0	U	ND< 20.0	U	ND< 20.0	U
2,4,6-Trichlorophenol		ND< 5.00	U	ND< 10.0	U	ND< 10.0	U	ND< 10.0	U	ND< 10.0	U	ND< 10.0	U
2,4-Dichlorophenol	**1**	**ND< 5.00**	**U**	**ND< 10.0**	**U**	**ND< 10.0**	**U**	**ND< 10.0**	**U**	**ND< 10.0**	**U**	**ND< 10.0**	**U**
2,4-Dimethylphenol	**5**	ND< 5.00	U	**ND< 10.0**	**U**	**ND< 10.0**	**U**	**ND< 10.0**	**U**	**ND< 10.0**	**U**	**ND< 10.0**	**U**
2,4-Dinitrophenol	**1**	**ND< 10.0**	**U**	**ND< 20.0**	**U**	**ND< 20.0**	**U**	**ND< 20.0**	**U**	**ND< 20.0**	**U**	**ND< 20.0**	**U**
2,4-Dinitrotoluene	**5**	ND< 5.00	U	**ND< 10.0**	**U**	**ND< 10.0**	**U**	**ND< 10.0**	**U**	**ND< 10.0**	**U**	**ND< 10.0**	**U**
2,6-Dinitrotoluene	**5**	ND< 5.00	U	**ND< 10.0**	**U**	**ND< 10.0**	**U**	**ND< 10.0**	**U**	**ND< 10.0**	**U**	**ND< 10.0**	**U**
2-Chloronaphthalene	10	ND< 5.00	U	ND< 10.0	U	ND< 10.0	U	ND< 10.0	U	ND< 10.0	U	ND< 10.0	U
2-Chlorophenol		ND< 5.00	U	ND< 10.0	U	ND< 10.0	U	ND< 10.0	U	ND< 10.0	U	ND< 10.0	U
2-Methylnaphthalene		ND< 5.00	U	ND< 10.0	U	ND< 10.0	U	ND< 10.0	U	ND< 10.0	U	ND< 10.0	U
2-Methylphenol (O-Cresol)		ND< 5.00	U	ND< 10.0	U	ND< 10.0	U	ND< 10.0	U	ND< 10.0	U	ND< 10.0	U
2-Nitroaniline	**5**	**ND< 10.0**	**U**	**ND< 20.0**	**U**	**ND< 20.0**	**U**	**ND< 20.0**	**U**	**ND< 20.0**	**U**	**ND< 20.0**	**U**
2-Nitrophenol		ND< 5.00	U	ND< 10.0	U	ND< 10.0	U	ND< 10.0	U	ND< 10.0	U	ND< 10.0	U
3,3'-Dichlorobenzidine	**5**	ND< 5.00	U	**ND< 10.0**	**U**	**ND< 10.0**	**U**	**ND< 10.0**	**U**	**ND< 10.0**	**U**	**ND< 10.0**	**U**
3-Methylphenol		ND< 5.00	U	ND< 10.0	U	ND< 10.0	U	ND< 10.0	U	ND< 10.0	U	ND< 10.0	U
3-Nitroaniline	**5**	**ND< 10.0**	**U**	**ND< 20.0**	**U**	**ND< 20.0**	**U**	**ND< 20.0**	**U**	**ND< 20.0**	**U**	**ND< 20.0**	**U**
4,6-Dinitro-2-Methylphenol		ND< 10.0	U	ND< 20.0	U	ND< 20.0	U	ND< 20.0	U	ND< 20.0	U	ND< 20.0	U
4-Bromophenyl Phenyl Ether		ND< 5.00	U	ND< 10.0	U	ND< 10.0	U	ND< 10.0	U	ND< 10.0	U	ND< 10.0	U
4-Chloro-3-Methylphenol		ND< 5.00	U	ND< 10.0	U	ND< 10.0	U	ND< 10.0	U	ND< 10.0	U	ND< 10.0	U
4-Chloroaniline	**5**	ND< 5.00	U	**ND< 10.0**	**U**	**ND< 10.0**	**U**	**ND< 10.0**	**U**	**ND< 10.0**	**U**	**ND< 10.0**	**U**
4-Chlorophenyl Phenyl Ether		ND< 5.00	U	ND< 10.0	U	ND< 10.0	U	ND< 10.0	U	ND< 10.0	U	ND< 10.0	U
4-Nitroaniline	**5**	**ND< 10.0**	**U**	**ND< 20.0**	**U**	**ND< 20.0**	**U**	**ND< 20.0**	**U**	**ND< 20.0**	**U**	**ND< 20.0**	**U**
4-Nitrophenol		ND< 10.0	U	ND< 20.0	U	ND< 20.0	U	ND< 20.0	U	ND< 20.0	U	ND< 20.0	U
Acenaphthene	20	ND< 5.00	U	ND< 10.0	U	ND< 10.0	U	ND< 10.0	U	ND< 10.0	U	ND< 10.0	U
Acenaphthylene		ND< 5.00	U	ND< 10.0	U	ND< 10.0	U	ND< 10.0	U	ND< 10.0	U	ND< 10.0	U
Acetophenone		ND< 5.00	U	ND< 10.0	U	ND< 10.0	U	ND< 10.0	U	ND< 10.0	U	ND< 10.0	U
Anthracene		ND< 5.00	U	ND< 10.0	U	ND< 10.0	U	ND< 10.0	U	ND< 10.0	U	ND< 10.0	U
Atrazine	**7.5**	ND< 5.00	U	**ND< 10.0**	**U**	**ND< 10.0**	**U**	**ND< 10.0**	**U**	**ND< 10.0**	**U**	**ND< 10.0**	**U**
Benzaldehyde		ND< 5.00	U	ND< 10.0	U	ND< 10.0	U	ND< 10.0	U	ND< 10.0	U	ND< 10.0	U
Benzo(A)Anthracene	**0.002**	**ND< 5.00**	**U**	**ND< 10.0**	**U**	**ND< 10.0**	**U**	**ND< 10.0**	**U**	**ND< 10.0**	**U**	**ND< 10.0**	**U**
Benzo(A)Pyrene	**0**	**ND< 5.00**	**U**	**ND< 10.0**	**U**	**ND< 10.0**	**U**	**ND< 10.0**	**U**	**ND< 10.0**	**U**	**ND< 10.0**	**U**
Benzo(B)Fluoranthene	**0.002**	**ND< 5.00**	**U**	**ND< 10.0**	**U**	**ND< 10.0**	**U**	**ND< 10.0**	**U**	**ND< 10.0**	**U**	**ND< 10.0**	**U**
Benzo(G,H,I)Perylene		ND< 5.00	U	ND< 10.0	U	ND< 10.0	U	ND< 10.0	U	ND< 10.0	U	ND< 10.0	U
Benzo(K)Fluoranthene	**0.002**	**ND< 5.00**	**U**	**ND< 10.0**	**U**	**ND< 10.0**	**U**	**ND< 10.0**	**U**	**ND< 10.0**	**U**	**ND< 10.0**	**U**
Benzyl Butyl Phthalate	50	ND< 5.00	U	ND< 10.0	U	ND< 10.0	U	ND< 10.0	U	ND< 10.0	U	ND< 10.0	U
Biphenyl (Diphenyl)	**5**	ND< 5.00	U	**ND< 10.0**	**U**	**ND< 10.0**	**U**	**ND< 10.0**	**U**	**ND< 10.0**	**U**	**ND< 10.0**	**U**
Bis(2-Chloroethoxy) Methane	**5**	ND< 5.00	U	**ND< 10.0**	**U**	**ND< 10.0**	**U**	**ND< 10.0**	**U**	**ND< 10.0**	**U**	**ND< 10.0**	**U**
Bis(2-Chloroethyl) Ether (2-Chloroethyl Ether)	**1**	**ND< 5.00**	**U**	**ND< 10.0**	**U**	**ND< 10.0**	**U**	**ND< 10.0**	**U**	**ND< 10.0**	**U**	**ND< 10.0**	**U**
Bis(2-Ethylhexyl) Phthalate	**5**	ND< 5.00	U	**ND< 10.0**	**U**	**9.24**	**J**	**6.97**	**J**	**ND< 10.0**	**U**	**ND< 10.0**	**U**
Caprolactam		ND< 5.00	U	ND< 10.0	U	ND< 10.0	U	ND< 10.0	U	ND< 10.0	U	ND< 10.0	U
Carbazole		ND< 5.00	U	ND< 10.0	U	ND< 10.0	U	ND< 10.0	U	ND< 10.0	U	ND< 10.0	U
Chrysene	**0.002**	**ND< 5.00**	**U**	**ND< 10.0**	**U**	**ND< 10.0**	**U**	**ND< 10.0**	**U**	**ND< 10.0**	**U**	**ND< 10.0**	**U**
Dibenz(A,H)Anthracene		ND< 5.00	U	ND< 10.0	U	ND< 10.0	U	ND< 10.0	U	ND< 10.0	U	ND< 10.0	U
Dibenzofuran		ND< 5.00	U	ND< 10.0	U	ND< 10.0	U	ND< 10.0	U	ND< 10.0	U	ND< 10.0	U
Diethyl Phthalate	50	ND< 5.00	U	ND< 10.0	U	ND< 10.0	U	ND< 10.0	U	ND< 10.0	U	ND< 10.0	U
Dimethyl Phthalate	50	ND< 10.0	U	ND< 20.0	U	ND< 20.0	U	ND< 20.0	U	ND< 20.0	U	ND< 20.0	U
Di-N-Butyl Phthalate	50	ND< 5.00	U	ND< 10.0	U	ND< 10.0	U	ND< 10.0	U	ND< 10.0	U	ND< 10.0	U
Di-N-Octylphthalate	50	ND< 5.00	U	ND< 10.0	U	ND< 10.0	U	ND< 10.0	U	ND< 10.0	U	ND< 10.0	U
Fluoranthene	50	ND< 5.00	U	ND< 10.0	U	ND< 10.0	U	ND< 10.0	U	ND< 10.0	U	ND< 10.0	U
Fluorene	50	ND< 5.00	U	ND< 10.0	U	ND< 10.0	U	ND< 10.0	U	ND< 10.0	U	ND< 10.0	U
Hexachlorobenzene	**0.04**	**ND< 5.00**	**U**	**ND< 10.0**	**U**	**ND< 10.0**	**U**	**ND< 10.0**	**U**	**ND< 10.0**	**U**	**ND< 10.0**	**U**
Hexachlorobutadiene	**0.5**	**ND< 5.00**	**U**	**ND< 10.0**	**U**	**ND< 10.0**	**U**	**ND< 10.0**	**U**	**ND< 10.0**	**U**	**ND< 10.0**	**U**
Hexachlorocyclopentadiene	**5**	ND< 5.00	U	**ND< 10.0**	**U**	**ND< 10.0**	**U**	**ND< 10.0**	**U**	**ND< 10.0**	**U**	**ND< 10.0**	**U**
Hexachloroethane	**5**	ND< 5.00	U	**ND< 10.0**	**U**	**ND< 10.0**	**U**	**ND< 10.0**	**U**	**ND< 10.0**	**U**	**ND< 10.0**	**U**
Indeno(1,2,3-C,D)Pyrene	**0.002**	**ND< 5.00**	**U**	**ND< 10.0**	**U**	**ND< 10.0**	**U**	**ND< 10.0**	**U**	**ND< 10.0**	**U**	**ND< 10.0**	**U**
Isophorone	50	ND< 5.00	U	ND< 10.0	U	ND< 10.0	U	ND< 10.0	U	ND< 10.0	U	ND< 10.0	U
Naphthalene	10	ND< 5.00	U	ND< 10.0	U	ND< 10.0	U	ND< 10.0	U	ND< 10.0	U	ND< 10.0	U
Nitrobenzene	**0.4**	**ND< 5.00**	**U**	**ND< 10.0**	**U**	**ND< 10.0**	**U**	**ND< 10.0**	**U**	**ND< 10.0**	**U**	**ND< 10.0**	**U**
N-Nitrosodi-N-Propylamine		ND< 5.00	U	ND< 10.0	U	ND< 10.0	U	ND< 10.0	U	ND< 10.0	U	ND< 10.0	U
N-Nitrosodiphenylamine	50	ND< 5.00	U	ND< 10.0	U	ND< 10.0	U	ND< 10.0	U	ND< 10.0	U	ND< 10.0	U
Pentachlorophenol	**1.5**	**ND< 10.0**	**U**	**ND< 20.0**	**U**	**ND< 20.0**	**U**	**ND< 20.0**	**U**	**ND< 20.0**	**U**	**ND< 20.0**	**U**
Phenanthrene	50	ND< 5.00	U	ND< 10.0	U	ND< 10.0	U	ND< 10.0	U	ND< 10.0	U	ND< 10.0	U
Phenol	**1**	**ND< 5.00**	**U**	**ND< 10.0**	**U**	**ND< 10.0**	**U**	**ND< 10.0**	**U**	**ND< 10.0**	**U**	**ND< 10.0**	**U**
Pyrene	50	ND< 5.00	U	ND< 10.0	U	ND< 10.0	U	ND< 10.0	U	ND< 10.0	U	ND< 10.0	U

NOTES:

1. Groundwater sample analytical results are compared to the New York State Department of Environmental Conservation Technical and Operational Guidance Series 1.1.1 Ambient Water Quality Standards and guidance values for drinking water (CLASS GA) Codes, Rules, and Regulations.
2. CLASS GA exceedances are in bold and highlighted yellow.
3. ND = Not Detected
4. Results shown as "ND" with Reporting Limits exceeding CLASS GA values are in bold.
5. SVOCs = Semi-Volatile Organic Compounds
6. µg/L = micrograms per liter
7. Qualifier (Q) definitions are provided in the official lab reports.

Table 10C – Total Metals in Groundwater

TABLE 10C: Total Metals in Groundwater
Groundwater Sample Results (non-QA/QC)
Hudson River Psychiatric Center - North BCP Site, Poughkeepsie, NY
PVE Sheffler File #560909

	Date Sampled	6/2/2014		7/28/2014		7/28/2014		5/30/2014		6/4/2014	
	Location	MW-PH-1		MW-PH-2		MW-PH-3		MW-AG-1		MW-AG-1	
	Sample ID	MW-PH-1 7-17'		MW-PH-2, 6-16'		MW-PH-3, 8-18'		MW-AG-1 10-20'		MW-AG-1 10-20'	
Analyte	CLASS GA	Result	Q	Result	Q	Result	Q	Result	Q	Result	Q
Metals (µg/L)											
Aluminum		670		244		249		485			
Antimony	**3**	**ND< 60**	**U**	**ND< 60**	**U**	**ND< 60**	**U**	**ND< 60**	**U**		
Arsenic	25	ND< 10	U	ND< 10	U	ND< 10	U	ND< 10	U		
Barium	1000	ND< 100	U	ND< 100	U	ND< 100	U	ND< 100	U		
Beryllium	**3**	**ND< 5**	**U**	**ND< 5**	**U**	**ND< 5**	**U**	**ND< 5**	**U**		
Cadmium	**5**	**7.51**		ND< 5	U	3.13	J	ND< 5	U		
Calcium		71300		42600		38900		57500			
Chromium, Total		6.93	J	ND< 10	U	ND< 10	U	ND< 10	U		
Chromium, Hexavalent	50	ND< 10	U							ND< 10	U
Cyanide	200	ND< 10	U					ND< 10	U		
Cyanide	200										
Cobalt		57.6		ND< 50	U	ND< 50	U	ND< 50	U		
Copper	200	ND< 25	U	ND< 25	U	ND< 25	U	ND< 25	U		
Iron	**300**	**3040**		**312**		**336**		119			
Lead	25	ND< 10	U	ND< 10	U	ND< 10	U	ND< 10	U		
Magnesium	35000	24600		9270		12500		10100			
Manganese	**300**	**17400**		**1160**		**1050**		**3170**			
Mercury	0.7	ND< 0.2	U	ND< 0.2	U	ND< 0.2	U	ND< 0.2	U		
Nickel	**100**	**206**		33	J	63.7		30.1	J		
Potassium		6190		4110		2980		2960			
Selenium	10	ND< 10	U	ND< 10	U	ND< 10	U	ND< 10	U		
Silver	50	ND< 10	U	ND< 10	U	ND< 10	U	ND< 10	U		
Sodium	**20000**	12000		4890		14400		9610			
Thallium	**0.5**	**ND< 25**	**U**	**ND< 25**	**U**	**ND< 25**	**U**	**ND< 25**	**U**		
Vanadium		ND< 25	U	ND< 25	U	ND< 25	U	ND< 25	U		
Zinc	2000	922		80.6		183		52.5	J		

NOTES:

1. Groundwater sample analytical results are compared to the New York State Department of Environmental Conservation Technical and Operational Guidance Series 1.1.1 Ambient Water Quality Standards and guidance values for drinking water (CLASS GA) Codes, Rules, and Regulations.
2. CLASS GA exceedances are in bold and highlighted yellow.
3. ND = Not Detected
4. Results shown as "ND" with Reporting Limits exceeding CLASS GA values are in bold.
5. µg/L = micrograms per liter
6. Qualifier (Q) definitions are provided in the official lab reports.

TABLE 10C: Total Metals in Groundwater
Groundwater Sample Results (non-QA/QC)
Hudson River Psychiatric Center - North BCP Site, Poughkeepsie, NY
PVE Sheffler File #560909

	Date Sampled	5/30/2014		5/30/2014		5/30/2014		7/28/2014		12/30/2014	
	Location	MW-AG-2		MW-CW-2		MW-FS-1		MW-FD-1		MW-MRT-1	
	Sample ID	MW-AG-2 5-15'		MW-CW-2 16-26'		MW-FS-1 20-30'		MW-FD-1 15-25'		MW-MRT-1	
Analyte	CLASS GA	Result	Q	Result	Q	Result	Q	Result	Q	Result	Q
Metals (µg/L)											
Aluminum		ND< 200	U	359		227		ND< 200	U		
Antimony	**3**	**ND< 60**	**U**	**ND< 60**	**U**	**ND< 60**	**U**	**ND< 60**	**U**		
Arsenic	25	ND< 10	U	ND< 10	U	ND< 10	U	ND< 10	U	ND< 10	U
Barium	1000	ND< 100	U	ND< 100	U	ND< 100	U	ND< 100	U	ND< 100	U
Beryllium	**3**	**ND< 5**	**U**	**ND< 5**	**U**	**ND< 5**	**U**	**ND< 5**	**U**	**ND< 5**	**U**
Cadmium	**5**	ND< 5	U	ND< 5	U	ND< 5	U	ND< 5	U	ND< 5	U
Calcium		44400		53100		59200		57400			
Chromium, Total		ND< 10	U	ND< 10	U	ND< 10	U	ND< 10	U	ND< 10	U
Chromium, Hexavalent	50	ND< 10	U	ND< 10	U	ND< 10	U	ND< 10	U		
Cyanide	200	ND< 10	U	ND< 10	U	ND< 10	U	ND< 10	U		
Cyanide	200									ND< 10	U
Cobalt		ND< 50	U	ND< 50	U	ND< 50	U	ND< 50	U		
Copper	200	ND< 25	U	ND< 25	U	ND< 25	U	ND< 25	U	ND< 25	U
Iron	**300**	54.4	J	**544**		284		ND< 100	U		
Lead	25	ND< 10	U	ND< 10	U	ND< 10	U	ND< 10	U	ND< 10	U
Magnesium	35000	8390		8950		7540		9990			
Manganese	**300**	**301**		66		**397**		288		57.2	
Mercury	0.7	ND< 0.2	U	ND< 0.2	U	ND< 0.2	U	ND< 0.2	U	ND< 0.2	U
Nickel	**100**	ND< 40	U	ND< 40	U	ND< 40	U	ND< 40	U	ND< 40	U
Potassium		2140	J	1960	J	2300	J	2580			
Selenium	10	ND< 10	U	ND< 10	U	6.2	J	ND< 10	U	ND< 10	U
Silver	50	ND< 10	U	ND< 10	U	ND< 10	U	ND< 10	U	ND< 10	U
Sodium	**20000**	**21400**		**32900**		**82300**		13300			
Thallium	**0.5**	**ND< 25**	**U**	**ND< 25**	**U**	**ND< 25**	**U**	**ND< 25**	**U**		
Vanadium		ND< 25	U	ND< 25	U	ND< 25	U	ND< 25	U		
Zinc	2000	ND< 60	U	ND< 60	U	ND< 60	U	42.5	J	ND< 60	U

NOTES:

1. Groundwater sample analytical results are compared to the New York State Department of Environmental Conservation Technical and Operational Guidance Series 1.1.1 Ambient Water Quality Standards and guidance values for drinking water (CLASS GA) Codes, Rules, and Regulations.
2. CLASS GA exceedances are in bold and highlighted yellow.
3. ND = Not Detected
4. Results shown as "ND" with Reporting Limits exceeding CLASS GA values are in bold.
5. µg/L = micrograms per liter
6. Qualifier (Q) definitions are provided in the official lab reports.

TABLE 10C: Total Metals in Groundwater
Groundwater Sample Results (non-QA/QC)
Hudson River Psychiatric Center - North BCP Site, Poughkeepsie, NY
PVE Sheffler File #560909

	Date Sampled	1/12/2015		12/30/2014		1/12/2015		7/28/2014		5/30/2014	
	Location	MW-MRT-1		MW-MNTC-1		MW-MNTC-1		TMW-1R		TMW-2	
	Sample ID	MW-MRT-1		MW-MNTC-1		MW-MNTC-1		TMW-1R 28.5-38.5		TMW-2 20-30'	
Analyte	CLASS GA	Result	Q	Result	Q	Result	Q	Result	Q	Result	Q
Metals (µg/L)											
Aluminum								13000		302	
Antimony	**3**							**ND< 60**	**U**	**ND< 60**	**U**
Arsenic	25			ND< 10	U			6.67	J	ND< 10	U
Barium	1000			ND< 100	U			114		ND< 100	U
Beryllium	**3**			**ND< 5**	**U**			**ND< 5**	**U**	**ND< 5**	**U**
Cadmium	**5**			ND< 5	U			ND< 5	U	ND< 5	U
Calcium								101000		48600	
Chromium, Total				ND< 10	U			15.9		ND< 10	U
Chromium, Hexavalent	50	ND< 10	U			ND< 10	U	ND< 10	U	ND< 10	U
Cyanide	200							ND< 10	U	ND< 10	U
Cyanide	200			ND< 10	U						
Cobalt								ND< 50	U	ND< 50	U
Copper	200			ND< 25	U			41.8		ND< 25	U
Iron	**300**							**22900**		**355**	
Lead	25			ND< 10	U			18.1		ND< 10	U
Magnesium	35000							15400		2520	
Manganese	**300**			**786**				**726**		38.6	
Mercury	0.7			ND< 0.2	U			ND< 0.2	U	ND< 0.2	U
Nickel	**100**			ND< 40	U			ND< 40	U	ND< 40	U
Potassium								5050		ND< 2500	U
Selenium	10			ND< 10	U			ND< 10	U	ND< 10	U
Silver	50			ND< 10	U			ND< 10	U	ND< 10	U
Sodium	**20000**							**57000**		5690	
Thallium	**0.5**							**ND< 25**	**U**	**ND< 25**	**U**
Vanadium								20.7	J	ND< 25	U
Zinc	2000			30.2	J			88.4		ND< 60	U

NOTES:

1. Groundwater sample analytical results are compared to the New York State Department of Environmental Conservation Technical and Operational Guidance Series 1.1.1 Ambient Water Quality Standards and guidance values for drinking water (CLASS GA) Codes, Rules, and Regulations.
2. CLASS GA exceedances are in bold and highlighted yellow.
3. ND = Not Detected
4. Results shown as "ND" with Reporting Limits exceeding CLASS GA values are in bold.
5. µg/L = micrograms per liter
6. Qualifier (Q) definitions are provided in the official lab reports.

TABLE 10C: Total Metals in Groundwater
Groundwater Sample Results (non-QA/QC)
Hudson River Psychiatric Center - North BCP Site, Poughkeepsie, NY
PVE Sheffler File #560909

	Date Sampled	5/30/2014		5/30/2014		5/30/2014	
	Location	TMW-3		TMW-4		TMW-5	
	Sample ID	TMW-3 9-19'		TMW-4 10-20'		TMW-5 7-17'	
Analyte	CLASS GA	Result	Q	Result	Q	Result	Q
Metals (µg/L)							
Aluminum		ND< 200	U	ND< 200	U	1280	
Antimony	**3**	**ND< 60**	**U**	**ND< 60**	**U**	**ND< 60**	**U**
Arsenic	25	ND< 10	U	ND< 10	U	6.22	J
Barium	1000	ND< 100	U	ND< 100	U	ND< 100	U
Beryllium	**3**	**ND< 5**	**U**	**ND< 5**	**U**	**ND< 5**	**U**
Cadmium	**5**	ND< 5	U	ND< 5	U	**10.2**	
Calcium		23900		122000		95000	
Chromium, Total		ND< 10	U	ND< 10	U	ND< 10	U
Chromium, Hexavalent	50	ND< 10	U	ND< 10	U	ND< 10	U
Cyanide	200	ND< 10	U	ND< 10	U	ND< 10	U
Cyanide	200						
Cobalt		ND< 50	U	ND< 50	U	46.2	J
Copper	200	ND< 25	U	ND< 25	U	ND< 25	U
Iron	**300**	51.7	J	128		**4850**	
Lead	25	ND< 10	U	ND< 10	U	ND< 10	U
Magnesium	35000	5850		5440		29600	
Manganese	**300**	290		60.4		**11100**	
Mercury	0.7	ND< 0.2	U	ND< 0.2	U	ND< 0.2	U
Nickel	**100**	ND< 40	U	ND< 40	U	**217**	
Potassium		ND< 2500	U	2210	J	1310	J
Selenium	10	ND< 10	U	7.4	J	ND< 10	U
Silver	50	ND< 10	U	ND< 10	U	ND< 10	U
Sodium	**20000**	**37100**		5560		6060	
Thallium	**0.5**	**ND< 25**	**U**	**ND< 25**	**U**	**ND< 25**	**U**
Vanadium		ND< 25	U	ND< 25	U	ND< 25	U
Zinc	2000	ND< 60	U	ND< 60	U	1090	

NOTES:

1. Groundwater sample analytical results are compared to the New York State Department of Environmental Conservation Technical and Operational Guidance Series 1.1.1 Ambient Water Quality Standards and guidance values for drinking water (CLASS GA) Codes, Rules, and Regulations.
2. CLASS GA exceedances are in bold and highlighted yellow.
3. ND = Not Detected
4. Results shown as "ND" with Reporting Limits exceeding CLASS GA values are in bold.
5. µg/L = micrograms per liter
6. Qualifier (Q) definitions are provided in the official lab reports.

Table 10D – Pesticides, Herbicides, and PCBs in Groundwater

TABLE 10D: Pesticides, Herbicides, and PCBs in Groundwater
Groundwater Sample Results (non-QA/QC)
Hudson River Psychiatric Center - North BCP Site, Poughkeepsie, NY
PVE Sheffler File #560909

	Date Sampled	6/4/2014		12/29/2014		5/30/2014		6/4/2014		12/29/2014		5/30/2014		6/5/2014		5/30/2014	
	Location	MW-PH-1		MW-PH-1		MW-AG-1		MW-AG-1		MW-AG-1		MW-AG-2		MW-AG-2		MW-CW-2	
	Sample ID	MW-PH-1 7-17'		MW-PH-1		MW-AG-1 10-20'		MW-AG-1 10-20'		MW-AG-1		MW-AG-2 5-15'		MW-AG-2 5-15'		MW-CW-2 16-26'	
Analyte	CLASS GA	Result	Q	Result	Q	Result	Q	Result	Q	Result	Q	Result	Q	Result	Q	Result	Q
Pesticides (µg/L)																	
Aldrin	**0**	**ND< 0.100**	**U**	**ND< 0.0100**	**U**			**ND< 0.100**	**U**	**ND< 0.0100**	**U**			**ND< 0.100**	**U**		
Alpha Bhc (Alpha Hexachlorocyclohexane)	**0.01**	**ND< 0.100**	**U**	ND< 0.0100	U			**ND< 0.100**	**U**	ND< 0.0100	U			**0.492**			
Alpha Chlordane		ND< 0.100	U	ND< 0.0100	U			ND< 0.100	U	ND< 0.0100	U			ND< 0.100	U		
Alpha Endosulfan		ND< 0.100	U	ND< 0.0100	U			ND< 0.100	U	ND< 0.0100	U			ND< 0.100	U		
Beta Bhc (Beta Hexachlorocyclohexane)	**0.04**	**ND< 0.100**	**U**	0.00609	J			**ND< 0.100**	**U**	ND< 0.0100	U			**0.0653**	**JP**		
Beta Endosulfan		ND< 0.100	U	ND< 0.0100	U			ND< 0.100	U	ND< 0.0100	U			ND< 0.100	U		
Delta BHC (Delta Hexachlorocyclohexane)	**0.04**	**ND< 0.100**	**U**	0.00599	JPB			**ND< 0.100**	**U**	0.00730	JPB			**0.0638**	**JP**		
Dieldrin	**0.004**	**ND< 0.100**	**U**	**ND< 0.0100**	**U**			**ND< 0.100**	**U**	**ND< 0.0100**	**U**			**ND< 0.100**	**U**		
Endosulfan Sulfate		ND< 0.100	U	ND< 0.0100	U			ND< 0.100	U	ND< 0.0100	U			ND< 0.100	U		
Endrin	**0**	**ND< 0.100**	**U**	**ND< 0.0100**	**U**			**ND< 0.100**	**U**	**ND< 0.0100**	**U**			**ND< 0.100**	**U**		
Endrin Aldehyde	5	ND< 0.100	U	0.00680	JB			ND< 0.100	U	0.0109	PB			ND< 0.100	U		
Endrin Ketone	5	ND< 0.100	U	ND< 0.0100	U			ND< 0.100	U	ND< 0.0100	U			ND< 0.100	U		
Gamma Bhc (Lindane)	**0.05**	**ND< 0.100**	**U**	ND< 0.0100	U			**ND< 0.100**	**U**	ND< 0.0100	U			**ND< 0.100**	**U**		
Gamma Chlordane		ND< 0.100	U	0.00509	JP			ND< 0.100	U	ND< 0.0100	U			ND< 0.100	U		
Heptachlor	**0.04**	**ND< 0.100**	**U**	ND< 0.0100	U			**ND< 0.100**	**U**	ND< 0.0100	U			**ND< 0.100**	**U**		
Heptachlor Epoxide	**0.03**	**ND< 0.100**	**U**	ND< 0.0100	U			**ND< 0.100**	**U**	ND< 0.0100	U			**ND< 0.100**	**U**		
Methoxychlor	35	ND< 0.100	U	ND< 0.0100	U			ND< 0.100	U	ND< 0.0100	U			ND< 0.100	U		
P,P'-DDD	0.3	ND< 0.100	U	ND< 0.0100	U			ND< 0.100	U	ND< 0.0100	U			ND< 0.100	U		
P,P'-DDE	0.2	ND< 0.100	U	ND< 0.0100	U			ND< 0.100	U	ND< 0.0100	U			ND< 0.100	U		
P,P'-DDT	0.2	ND< 0.100	U	ND< 0.0100	U			ND< 0.100	U	ND< 0.0100	U			ND< 0.100	U		
Toxaphene	**0.06**	**ND< 1.00**	**U**	**ND< 0.100**	**U**			**ND< 1.00**	**U**	**ND< 0.100**	**U**			**ND< 1.00**	**U**		
Herbicides (µg/L)																	
Silvex (2,4,5-TP)	**0.26**	**ND< 1.00**	**U**			**ND< 1.00**	**U**					**ND< 1.00**	**U**			**ND< 1.00**	**U**
PCBs (µg/L)																	
PCB-1016 (Aroclor 1016)		ND< 0.100	U					ND< 0.100	U					ND< 1.23	U		
PCB-1221 (Aroclor 1221)		ND< 0.100	U					ND< 0.100	U					ND< 1.23	U		
PCB-1232 (Aroclor 1232)		ND< 0.100	U					ND< 0.100	U					ND< 1.23	U		
PCB-1242 (Aroclor 1242)		ND< 0.100	U					ND< 0.100	U					ND< 1.23	U		
PCB-1248 (Aroclor 1248)		ND< 0.100	U					ND< 0.100	U					ND< 1.23	U		
PCB-1254 (Aroclor 1254)		ND< 0.100	U					ND< 0.100	U					ND< 1.23	U		
PCB-1260 (Aroclor 1260)		ND< 0.100	U					ND< 0.100	U					ND< 1.23	U		
PCB-1262 (Aroclor 1262)		ND< 0.100	U					ND< 0.100	U					ND< 1.23	U		
PCB-1268 (Aroclor 1268)		ND< 0.100	U					ND< 0.100	U					ND< 1.23	U		

NOTES:

NOTES:

1. Groundwater sample analytical results are compared to the New York State Department of Environmental Conservation Technical and Operational Guidance Series 1.1.1 Ambient Water Quality Standards and guidance values for drinking water (CLASS GA) Codes, Rules, and Regulations.
2. CLASS GA exceedances are in bold and highlighted yellow.
3. ND = Not Detected
4. Results shown as "ND" with Reporting Limits exceeding CLASS GA values are in bold.
5. mg/L = milligrams per liter
6. mg/L = milligrams per liter
7. Qualifier (Q) definitions are provided in the official lab reports.

TABLE 10D: Pesticides, Herbicides, and PCBs in Groundwater
Groundwater Sample Results (non-QA/QC)
Hudson River Psychiatric Center - North BCP Site, Poughkeepsie, NY
PVE Sheffler File #560909

	Date Sampled	6/4/2014		12/17/2014		5/30/2014		12/17/2014		7/28/2014		12/29/2014		12/30/2014		12/30/2014	
	Location	MW-CW-2		MW-CW-2		MW-FS-1		MW-FS-1		MW-FD-1		MW-FD-1		MW-MRT-1		MW-MNTC-1	
	Sample ID	MW-CW-2 18-28'		MW-CW-2		MW-FS-1 20-30'		MW-FS-1		MW-FD-1 15-25'		MW-FD-1		MW-MRT-1		MW-MNTC-1	
Analyte	CLASS GA	Result	Q	Result	Q	Result	Q	Result	Q	Result	Q	Result	Q	Result	Q	Result	Q
Pesticides (µg/L)																	
Aldrin	**0**	**ND< 0.100**	**U**	**ND< 0.0200**	**U**	**ND< 0.100**	**U**	**ND< 0.0200**	**U**	**ND< 0.100**	**U**	**ND< 0.0100**	**U**	**ND< 0.0100**	**U**	**ND< 0.0100**	**U**
Alpha Bhc (Alpha Hexachlorocyclohexane)	**0.01**	**ND< 0.100**	**U**	**ND< 0.0200**	**U**	**ND< 0.100**	**U**	**ND< 0.0200**	**U**	**ND< 0.100**	**U**	ND< 0.0100	U	ND< 0.0100	U	0.00682	J
Alpha Chlordane		ND< 0.100	U	ND< 0.0200	U	ND< 0.100	U	ND< 0.0200	U	ND< 0.100	U	ND< 0.0100	U	ND< 0.0100	U	ND< 0.0100	U
Alpha Endosulfan		ND< 0.100	U	ND< 0.0200	U	ND< 0.100	U	ND< 0.0200	U	ND< 0.100	U	ND< 0.0100	U	ND< 0.0100	U	ND< 0.0100	U
Beta Bhc (Beta Hexachlorocyclohexane)	**0.04**	**ND< 0.100**	**U**	ND< 0.0200	U	**ND< 0.100**	**U**	ND< 0.0200	U	**ND< 0.100**	**U**	ND< 0.0100	U	0.00530	J	ND< 0.0100	U
Beta Endosulfan		ND< 0.100	U	ND< 0.0200	U	ND< 0.100	U	ND< 0.0200	U	ND< 0.100	U	ND< 0.0100	U	ND< 0.0100	U	ND< 0.0100	U
Delta BHC (Delta Hexachlorocyclohexane)	**0.04**	**ND< 0.100**	**U**	ND< 0.0200	U	**ND< 0.100**	**U**	0.0130	JB	**ND< 0.100**	**U**	0.00575	JPB	0.00609	JB	0.0247	B
Dieldrin	**0.004**	**ND< 0.100**	**U**	**ND< 0.0200**	**U**	**ND< 0.100**	**U**	**ND< 0.0200**	**U**	**ND< 0.100**	**U**	**ND< 0.0100**	**U**	**ND< 0.0100**	**U**	**ND< 0.0100**	**U**
Endosulfan Sulfate		ND< 0.100	U	ND< 0.0200	U	ND< 0.100	U	ND< 0.0200	U	ND< 0.100	U	ND< 0.0100	U	ND< 0.0100	U	ND< 0.0100	U
Endrin	**0**	**ND< 0.100**	**U**	**ND< 0.0200**	**U**	**ND< 0.100**	**U**	**ND< 0.0200**	**U**	**ND< 0.100**	**U**	**ND< 0.0100**	**U**	**ND< 0.0100**	**U**	**ND< 0.0100**	**U**
Endrin Aldehyde	5	ND< 0.100	U	ND< 0.0200	U	ND< 0.100	U	ND< 0.0200	U	ND< 0.100	U	0.00756	JB	ND< 0.0100	U	0.00764	JB
Endrin Ketone	5	ND< 0.100	U	ND< 0.0200	U	ND< 0.100	U	ND< 0.0200	U	ND< 0.100	U	ND< 0.0100	U	ND< 0.0100	U	ND< 0.0100	U
Gamma Bhc (Lindane)	**0.05**	**ND< 0.100**	**U**	ND< 0.0200	U	**ND< 0.100**	**U**	ND< 0.0200	U	**ND< 0.100**	**U**	ND< 0.0100	U	ND< 0.0100	U	ND< 0.0100	U
Gamma Chlordane		ND< 0.100	U	ND< 0.0200	U	ND< 0.100	U	ND< 0.0200	U	ND< 0.100	U	ND< 0.0100	U	ND< 0.0100	U	ND< 0.0100	U
Heptachlor	**0.04**	**ND< 0.100**	**U**	ND< 0.0200	U	**ND< 0.100**	**U**	ND< 0.0200	U	**ND< 0.100**	**U**	ND< 0.0100	U	ND< 0.0100	U	ND< 0.0100	U
Heptachlor Epoxide	**0.03**	**ND< 0.100**	**U**	ND< 0.0200	U	**ND< 0.100**	**U**	ND< 0.0200	U	**ND< 0.100**	**U**	ND< 0.0100	U	ND< 0.0100	U	ND< 0.0100	U
Methoxychlor	35	ND< 0.100	U	ND< 0.0200	U	ND< 0.100	U	ND< 0.0200	U	ND< 0.100	U	ND< 0.0100	U	ND< 0.0100	U	0.0178	
P,P'-DDD	0.3	ND< 0.100	U	ND< 0.0200	U	ND< 0.100	U	ND< 0.0200	U	ND< 0.100	U	ND< 0.0100	U	ND< 0.0100	U	ND< 0.0100	U
P,P'-DDE	0.2	ND< 0.100	U	ND< 0.0200	U	ND< 0.100	U	ND< 0.0200	U	ND< 0.100	U	ND< 0.0100	U	ND< 0.0100	U	ND< 0.0100	U
P,P'-DDT	0.2	ND< 0.100	U	ND< 0.0200	U	ND< 0.100	U	ND< 0.0200	U	ND< 0.100	U	ND< 0.0100	U	ND< 0.0100	U	ND< 0.0100	U
Toxaphene	**0.06**	**ND< 1.00**	**U**	**ND< 0.200**	**U**	**ND< 1.00**	**U**	**ND< 0.200**	**U**	**ND< 1.00**	**U**	**ND< 0.100**	**U**	**ND< 0.100**	**U**	**ND< 0.100**	**U**
Herbicides (µg/L)																	
Silvex (2,4,5-TP)	**0.26**					**ND< 1.00**	**U**			**ND< 1**	**U**			**ND< 1.00**	**U**	**ND< 1.00**	**U**
PCBs (µg/L)																	
PCB-1016 (Aroclor 1016)		ND< 0.100	U			ND< 1.00	U			ND< 0.100	U			ND< 0.100	U	ND< 0.100	U
PCB-1221 (Aroclor 1221)		ND< 0.100	U			ND< 1.00	U			ND< 0.100	U			ND< 0.100	U	ND< 0.100	U
PCB-1232 (Aroclor 1232)		ND< 0.100	U			ND< 1.00	U			ND< 0.100	U			ND< 0.100	U	ND< 0.100	U
PCB-1242 (Aroclor 1242)		ND< 0.100	U			ND< 1.00	U			ND< 0.100	U			ND< 0.100	U	ND< 0.100	U
PCB-1248 (Aroclor 1248)		ND< 0.100	U			ND< 1.00	U			ND< 0.100	U			ND< 0.100	U	ND< 0.100	U
PCB-1254 (Aroclor 1254)		ND< 0.100	U			ND< 1.00	U			ND< 0.100	U			ND< 0.100	U	ND< 0.100	U
PCB-1260 (Aroclor 1260)		ND< 0.100	U			ND< 1.00	U			ND< 0.100	U			ND< 0.100	U	ND< 0.100	U
PCB-1262 (Aroclor 1262)		ND< 0.100	U			ND< 1.00	U			ND< 0.100	U			ND< 0.100	U	ND< 0.100	U
PCB-1268 (Aroclor 1268)		ND< 0.100	U			ND< 1.00	U			ND< 0.100	U			ND< 0.100	U	ND< 0.100	U

NOTES:

NOTES:

1. Groundwater sample analytical results are compared to the New York State Department of Environmental Conservation Technical and Operational Guidance Series 1.1.1 Ambient Water Quality Standards and guidance values for drinking water (CLASS GA) Codes, Rules, and Regulations.
2. CLASS GA exceedances are in bold and highlighted yellow.
3. ND = Not Detected
4. Results shown as "ND" with Reporting Limits exceeding CLASS GA values are in bold.
5. mg/L = milligrams per liter
6. mg/L = milligrams per liter
7. Qualifier (Q) definitions are provided in the official lab reports.

TABLE 10D: Pesticides, Herbicides, and PCBs in Groundwater
Groundwater Sample Results (non-QA/QC)
Hudson River Psychiatric Center - North BCP Site, Poughkeepsie, NY
PVE Sheffler File #560909

	Date Sampled	7/28/2014		5/30/2014		6/4/2014		5/30/2014		6/4/2014		5/30/2014		6/4/2014	
	Location	TMW-1R		TMW-2		TMW-2		TMW-3		TMW-4		TMW-4		TMW-5	
	Sample ID	TMW-1R 28.5-38.5		TMW-2 20-30'		TMW-2 22-32'		TMW-3 9-19'		TMW-4 10-20'		TMW-4 10-20'		TMW-5 10-20'	
Analyte	CLASS GA	Result	Q	Result	Q	Result	Q	Result	Q	Result	Q	Result	Q	Result	Q
Pesticides (µg/L)															
Aldrin	**0**	**ND< 0.100**	**U**			**ND< 0.100**	**U**	**ND< 0.100**	**U**	**ND< 0.100**	**U**			**ND< 0.100**	**U**
Alpha Bhc (Alpha Hexachlorocyclohexane)	**0.01**	**ND< 0.100**	**U**			**ND< 0.100**	**U**	**ND< 0.100**	**U**	**ND< 0.100**	**U**			**ND< 0.100**	**U**
Alpha Chlordane		ND< 0.100	U			ND< 0.100	U	ND< 0.100	U	ND< 0.100	U			ND< 0.100	U
Alpha Endosulfan		ND< 0.100	U			ND< 0.100	U	ND< 0.100	U	ND< 0.100	U			ND< 0.100	U
Beta Bhc (Beta Hexachlorocyclohexane)	**0.04**	**ND< 0.100**	**U**			**ND< 0.100**	**U**	**ND< 0.100**	**U**	**ND< 0.100**	**U**			**ND< 0.100**	**U**
Beta Endosulfan		ND< 0.100	U			ND< 0.100	U	ND< 0.100	U	ND< 0.100	U			ND< 0.100	U
Delta BHC (Delta Hexachlorocyclohexane)	**0.04**	**0.0848**	**JP**			**ND< 0.100**	**U**	**ND< 0.100**	**U**	**ND< 0.100**	**U**			**ND< 0.100**	**U**
Dieldrin	**0.004**	**ND< 0.100**	**U**			**ND< 0.100**	**U**	**ND< 0.100**	**U**	**ND< 0.100**	**U**			**ND< 0.100**	**U**
Endosulfan Sulfate		ND< 0.100	U			ND< 0.100	U	ND< 0.100	U	ND< 0.100	U			ND< 0.100	U
Endrin	**0**	**ND< 0.100**	**U**			**ND< 0.100**	**U**	**ND< 0.100**	**U**	**ND< 0.100**	**U**			**ND< 0.100**	**U**
Endrin Aldehyde	5	ND< 0.100	U			ND< 0.100	U	ND< 0.100	U	ND< 0.100	U			ND< 0.100	U
Endrin Ketone	5	ND< 0.100	U			ND< 0.100	U	ND< 0.100	U	ND< 0.100	U			ND< 0.100	U
Gamma Bhc (Lindane)	**0.05**	**ND< 0.100**	**U**			**ND< 0.100**	**U**	**ND< 0.100**	**U**	**ND< 0.100**	**U**			**ND< 0.100**	**U**
Gamma Chlordane		ND< 0.100	U			ND< 0.100	U	ND< 0.100	U	ND< 0.100	U			ND< 0.100	U
Heptachlor	**0.04**	**ND< 0.100**	**U**			**ND< 0.100**	**U**	**ND< 0.100**	**U**	**ND< 0.100**	**U**			**ND< 0.100**	**U**
Heptachlor Epoxide	**0.03**	**ND< 0.100**	**U**			**ND< 0.100**	**U**	**ND< 0.100**	**U**	**ND< 0.100**	**U**			**ND< 0.100**	**U**
Methoxychlor	35	ND< 0.100	U			ND< 0.100	U	ND< 0.100	U	ND< 0.100	U			ND< 0.100	U
P,P'-DDD	0.3	ND< 0.100	U			ND< 0.100	U	ND< 0.100	U	ND< 0.100	U			ND< 0.100	U
P,P'-DDE	0.2	ND< 0.100	U			ND< 0.100	U	ND< 0.100	U	ND< 0.100	U			ND< 0.100	U
P,P'-DDT	0.2	ND< 0.100	U			ND< 0.100	U	ND< 0.100	U	ND< 0.100	U			ND< 0.100	U
Toxaphene	**0.06**	**ND< 1.00**	**U**			**ND< 1.00**	**U**	**ND< 1.00**	**U**	**ND< 1.00**	**U**			**ND< 1.00**	**U**
Herbicides (µg/L)															
Silvex (2,4,5-TP)	**0.26**	**ND< 1**	**U**	**ND< 1.00**	**U**			**ND< 1.00**	**U**			**ND< 1.00**	**U**	**ND< 1.00**	**U**
PCBs (µg/L)															
PCB-1016 (Aroclor 1016)		ND< 0.100	U			ND< 0.100	U	ND< 1.00	U	ND< 0.100	U			ND< 0.100	U
PCB-1221 (Aroclor 1221)		ND< 0.100	U			ND< 0.100	U	ND< 1.00	U	ND< 0.100	U			ND< 0.100	U
PCB-1232 (Aroclor 1232)		ND< 0.100	U			ND< 0.100	U	ND< 1.00	U	ND< 0.100	U			ND< 0.100	U
PCB-1242 (Aroclor 1242)		ND< 0.100	U			ND< 0.100	U	ND< 1.00	U	ND< 0.100	U			ND< 0.100	U
PCB-1248 (Aroclor 1248)		ND< 0.100	U			ND< 0.100	U	ND< 1.00	U	ND< 0.100	U			ND< 0.100	U
PCB-1254 (Aroclor 1254)		ND< 0.100	U			ND< 0.100	U	ND< 1.00	U	ND< 0.100	U			ND< 0.100	U
PCB-1260 (Aroclor 1260)		ND< 0.100	U			ND< 0.100	U	ND< 1.00	U	ND< 0.100	U			ND< 0.100	U
PCB-1262 (Aroclor 1262)		ND< 0.100	U			ND< 0.100	U	ND< 1.00	U	ND< 0.100	U			ND< 0.100	U
PCB-1268 (Aroclor 1268)		ND< 0.100	U			ND< 0.100	U	ND< 1.00	U	ND< 0.100	U			ND< 0.100	U

NOTES:

NOTES:

1. Groundwater sample analytical results are compared to the New York State Department of Environmental Conservation Technical and Operational Guidance Series 1.1.1 Ambient Water Quality Standards and guidance values for drinking water (CLASS GA) Codes, Rules, and Regulations.
2. CLASS GA exceedances are in bold and highlighted yellow.
3. ND = Not Detected
4. Results shown as "ND" with Reporting Limits exceeding CLASS GA values are in bold.
5. mg/L = milligrams per liter
6. mg/L = milligrams per liter
7. Qualifier (Q) definitions are provided in the official lab reports.

Table 11 – VOCs in Soil Vapor

TABLE 11: Volatile Organic Compounds (VOCs) in Soil Vapor
Soil Vapor Sample Results (non-QA/QC)
Hudson River Psychiatric Center - North BCP Site, Poughkeepsie, NY
PVE Sheffler File #560909

		Date Sampled	7/10/2014		7/10/2014		7/11/2014		7/22/2014		9/2/2014		7/22/2014		9/2/2014		7/22/2014		7/11/2014		7/11/2014		7/22/2014		9/2/2014		7/22/2014	
		Location	AG-SV-1A		AG-SV-1B		AG-SV-2		AG-SV-3		AG-SV-3		AG-SV-4		AG-SV-4		AG-SV-5		PH-SV-1A		PH-SV-1B		PH-SV-2		PH-SV-2		PH-SV-3	
		Sample Type	Sub-Slab		Sub-Slab (Dup.)		Soil Vapor		Soil Vapor		Soil Vapor		Soil Vapor		Soil Vapor		Soil Vapor		Sub-Slab		Sub-Slab (Dup.)		Soil Vapor		Soil Vapor		Soil Vapor	
		Sample ID	HRPC		HRPC		HRPC		AG-SV-3 20140722		HRPC		AG-SV-4 20140722		HRPC		AG-SV-5 20140722		HRPC		HRPC		PH-SV-2 20140722		HRPC		PH-SV-3 20140722	
Analyte	NYSDOH INDOOR AIR MEDIAN CONCENTRATION	NYSDOH INDOOR AIR 99TH PERCENTILE	Result	Q	Result	Q	Result	Q	Result	Q	Result	Q	Result	Q	Result	Q	Result	Q	Result	Q	Result	Q	Result	Q	Result	Q	Result	Q
VOCs (µg/m³)																												
1,1,1-Trichloroethane	**0.3**	41	**5.3**		**2.8**		ND< 0.82		ND< 0.82		ND< 0.82		ND< 0.82		ND< 0.82		ND< 0.82		**33**		**33**		ND< 0.82		ND< 0.82		ND< 0.82	
1,1,2,2-Tetrachloroethane	0.25	0.8	ND< 1.0		ND< 1.0		ND< 1.0		ND< 1.0		ND< 1.0		ND< 1.0		ND< 1.0		ND< 1.0		ND< 1.0		ND< 1.0		ND< 1.0		ND< 1.0		ND< 1.0	
1,1,2-Trichloro-1,2,2-Trifluoroethane			ND< 1.1		0.77	J	0.77	J	1.0	J	ND< 1.1		ND< 1.1		ND< 1.1		ND< 1.1		0.84	J	ND< 1.1		ND< 1.1		ND< 1.1		ND< 1.1	
1,1,2-Trichloroethane	0.25	1	ND< 0.82		ND< 0.82		ND< 0.82		ND< 0.82		ND< 0.82		ND< 0.82		ND< 0.82		ND< 0.82		ND< 0.82		ND< 0.82		ND< 0.82		ND< 0.82		ND< 0.82	
1,1-Dichloroethane	0.25	0.4	ND< 0.61		ND< 0.61		ND< 0.61		ND< 0.61		ND< 0.61		ND< 0.61		ND< 0.61		ND< 0.61		ND< 0.61		ND< 0.61		ND< 0.61		ND< 0.61		ND< 0.61	
1,1-Dichloroethene	0.25	6.3	ND< 0.59		ND< 0.59		ND< 0.59		ND< 0.59		ND< 0.59		ND< 0.59		ND< 0.59		ND< 0.59		ND< 0.59		ND< 0.59		ND< 0.59		ND< 0.59		ND< 0.59	
1,2,4-Trichlorobenzene	0.25	26	ND< 1.1		ND< 1.1		ND< 1.1		ND< 1.1		ND< 1.1		ND< 1.1		ND< 1.1		ND< 1.1		ND< 1.1		ND< 1.1		ND< 1.1		ND< 1.1		ND< 1.1	
1,2,4-Trimethylbenzene	**1.9**	**35**	**16**		**9.8**		**26**		**22**		**12**		**25**		**12**		**23**		**14**		**13**		**26**		**12**		**37**	
1,2-Dibromoethane (Ethylene Dibromide)	0.25	0.25	ND< 1.2		ND< 1.2		ND< 1.2		ND< 1.2		ND< 1.2		ND< 1.2		ND< 1.2		ND< 1.2		ND< 1.2		ND< 1.2		ND< 1.2		ND< 1.2		ND< 1.2	
1,2-Dichlorobenzene	0.25	2.3	ND< 0.90		ND< 0.90		ND< 0.90		ND< 0.90		ND< 0.90		ND< 0.90		ND< 0.90		ND< 0.90		ND< 0.90		ND< 0.90		ND< 0.90		ND< 0.90		ND< 0.90	
1,2-Dichloroethane	**0.25**	**0.4**	**0.69**		ND< 0.61		**1.2**		ND< 0.61		ND< 0.61		ND< 0.61		ND< 0.61		ND< 0.61		**0.45**	**J**	ND< 0.61		ND< 0.61		ND< 0.61		ND< 0.61	
1,2-Dichloropropane	0.25	9	ND< 0.69		ND< 0.69		ND< 0.69		ND< 0.69		ND< 0.69		ND< 0.69		ND< 0.69		ND< 0.69		ND< 0.69		ND< 0.69		ND< 0.69		ND< 0.69		ND< 0.69	
1,2-Dichlorotetrafluoroethane	0.25	23	ND< 1.0		ND< 1.0		ND< 1.0		ND< 1.0		ND< 1.0		ND< 1.0		ND< 1.0		ND< 1.0		ND< 1.0		ND< 1.0		ND< 1.0		ND< 1.0		ND< 1.0	
1,3,5-Trimethylbenzene (Mesitylene)	**0.6**	25	**7.1**		**3.7**		**8.2**		**7.1**		**6.6**		**9.3**		**5.9**		**9.3**		**4.7**		**4.7**		**9.2**		**6.4**		**10**	
1,3-Butadiene			ND< 0.33		ND< 0.33		ND< 0.33		ND< 0.33		ND< 0.33		ND< 0.33		ND< 0.33		ND< 0.33		ND< 0.33		ND< 0.33		ND< 0.33		ND< 0.33		ND< 0.33	
1,3-Dichlorobenzene	0.25	1.6	ND< 0.90		ND< 0.90		ND< 0.90		ND< 0.90		ND< 0.90		ND< 0.90		ND< 0.90		ND< 0.90		ND< 0.90		ND< 0.90		ND< 0.90		ND< 0.90		ND< 0.90	
1,4-Dichlorobenzene	0.25	25	ND< 0.90		ND< 0.90		ND< 0.90		ND< 0.90		ND< 0.90		ND< 0.90		ND< 0.90		ND< 0.90		ND< 0.90		ND< 0.90		ND< 0.90		ND< 0.90		ND< 0.90	
1,4-Dioxane (P-Dioxane)			ND< 1.1		ND< 1.1		ND< 1.1		ND< 1.1		ND< 1.1		ND< 1.1		ND< 1.1		ND< 1.1		ND< 1.1		ND< 1.1		ND< 1.1		ND< 1.1		ND< 1.1	
2,2,4-Trimethylpentane			0.93		0.79		4.0		42		ND< 0.70		11		ND< 0.70		9.7		1.7		2.7		7.1		ND< 0.70		8.5	
2-Hexanone	**0.3**	**16**	ND< 1.2		ND< 1.2		ND< 1.2		**34**		**140**		**77**		**340**		**61**		ND< 1.2		ND< 1.2		**43**		**93**		**38**	
4-Ethyltoluene	**2.1**	120	**8.4**		**4.0**		**11**		**7.1**		**6.0**		**10**		**4.5**		**9.5**		**4.9**		**4.5**		**9.4**		**5.4**		**9.3**	
Acetone	**21**	**200**	**140**		**84**		**80**		**1500**		**1400**		**3400**		**1500**		**1300**		**63**		**66**		**2900**		**600**		**1000**	
Allyl Chloride (3-Chloropropene)			ND< 0.47		ND< 0.47		ND< 0.47		ND< 0.47		ND< 0.47		ND< 0.47		ND< 0.47		ND< 0.47		ND< 0.47		ND< 0.47		ND< 0.47		ND< 0.47		ND< 0.47	
Benzene	**2.1**	120	2.0		ND< 0.48		**3.9**		**19**		**3.3**		**14**		**2.5**		**9.6**		**3.1**		**3.4**		**8.6**		**3.1**		**13**	
Benzyl Chloride			ND< 0.86		ND< 0.86		ND< 0.86		ND< 0.86		ND< 0.86		ND< 0.86		ND< 0.86		ND< 0.86		ND< 0.86		ND< 0.86		ND< 0.86		ND< 0.86		ND< 0.86	
Bromodichloromethane			ND< 1.0		ND< 1.0		ND< 1.0		ND< 1.0		ND< 1.0		ND< 1.0		ND< 1.0		ND< 1.0		ND< 1.0		ND< 1.0		ND< 1.0		ND< 1.0		ND< 1.0	
Bromoethene/ Vinyl Bromide			ND< 0.66		ND< 0.66		ND< 0.66		ND< 0.66		ND< 0.66		ND< 0.66		ND< 0.66		ND< 0.66		ND< 0.66		ND< 0.66		ND< 0.66		ND< 0.66		ND< 0.66	
Bromoform			ND< 1.6		ND< 1.6		ND< 1.6		ND< 1.6		ND< 1.6		ND< 1.6		ND< 1.6		ND< 1.6		ND< 1.6		ND< 1.6		ND< 1.6		ND< 1.6		ND< 1.6	
Bromomethane	0.25	3.2	ND< 0.58		ND< 0.58		ND< 0.58		ND< 0.58		ND< 0.58		ND< 0.58		ND< 0.58		ND< 0.58		ND< 0.58		ND< 0.58		ND< 0.58		ND< 0.58		ND< 0.58	
Carbon Disulfide			10		4.4		9.0		12		ND< 0.47		10		ND< 0.47		5.5		3.9		3.3		2.0		ND< 0.47		12	
Carbon Tetrachloride	0.25	3.2	ND< 0.94		ND< 0.94		ND< 0.94		ND< 0.94		ND< 0.94		ND< 0.94		ND< 0.94		ND< 0.94		ND< 0.94		ND< 0.94		ND< 0.94		ND< 0.94		ND< 0.94	
Chlorobenzene	0.25	3.2	ND< 0.69		ND< 0.69		ND< 0.69		ND< 0.69		ND< 0.69		ND< 0.69		ND< 0.69		ND< 0.69		ND< 0.69		ND< 0.69		ND< 0.69		ND< 0.69		ND< 0.69	
Chloroethane	0.25	0.9	ND< 0.40		ND< 0.40		ND< 0.40		ND< 0.40		ND< 0.40		ND< 0.40		ND< 0.40		ND< 0.40		ND< 0.40		ND< 0.40		ND< 0.40		ND< 0.40		ND< 0.40	
Chloroform	**0.25**	**13**	**0.54**	**J**	ND< 0.73		**1.2**		ND< 0.73		**0.54**	**J**	ND< 0.73		ND< 0.73		**0.83**		**3.5**		**3.1**		**0.88**		**0.88**		**22**	
Chloromethane	**0.5**	14	ND< 0.31		**1.0**		ND< 0.31		ND< 0.31		**0.76**		ND< 0.31		ND< 0.31		ND< 0.31		ND< 0.31		ND< 0.31		ND< 0.31		ND< 0.31		ND< 0.31	
Cis-1,2-Dichloroethylene	0.25	4.6	ND< 0.59		ND< 0.59		ND< 0.59		ND< 0.59		ND< 0.59		ND< 0.59		ND< 0.59		ND< 0.59		ND< 0.59		ND< 0.59		ND< 0.59		ND< 0.59		ND< 0.59	
Cis-1,3-Dichloropropene	0.25	2.1	ND< 0.68		ND< 0.68		ND< 0.68		ND< 0.68		ND< 0.68		ND< 0.68		ND< 0.68		ND< 0.68		ND< 0.68		ND< 0.68		ND< 0.68		ND< 0.68		ND< 0.68	
Cyclohexane	**0.8**	88	**2.6**		ND< 0.52		**6.0**		**66**		**3.6**		**35**		ND< 0.52		**6.8**		**1.4**		**1.9**		**4.7**		**4.1**		**7.9**	
Dibromochloromethane			ND< 1.3		ND< 1.3		ND< 1.3		ND< 1.3		ND< 1.3		ND< 1.3		ND< 1.3		ND< 1.3		ND< 1.3		ND< 1.3		ND< 1.3		ND< 1.3		ND< 1.3	
Dichlorodifluoromethane	**0.25**	180	**3.4**		**3.9**		**3.7**		**2.9**		**2.1**		**3.1**		**1.9**		**2.6**		ND< 0.74		ND< 0.74		**2.7**		**2.1**		**2.9**	
Ethyl Acetate			2.1		ND< 0.90		ND< 0.90		ND< 0.90		ND< 0.90		ND< 0.90		ND< 0.90		ND< 0.90		ND< 0.90		ND< 0.90		6.8		ND< 0.90		5.9	
Ethylbenzene	**1**	26	**7.7**		**4.1**		**8.2**		**16**		**8.3**		**17**		**4.7**		**19**		**6.8**		**6.5**		**16**		**8.6**		**19**	
Hexachlorobutadiene	0.25	29	ND< 1.6		ND< 1.6		ND< 1.6		ND< 1.6		ND< 1.6		ND< 1.6		ND< 1.6		ND< 1.6		ND< 1.6		ND< 1.6		ND< 1.6		ND< 1.6		ND< 1.6	
Isopropanol			ND< 0.37		20		ND< 0.37		ND< 0.37		52		ND< 0.37		60		ND< 0.37		8.6		18		ND< 0.37		ND< 0.37		ND< 0.37	
M And P Xylenes	**1.5**	**46**	**24**		**15**		**26**		**55**		**23**		**56**		**20**		**63**		**16**		**19**		**57**		**26**		**67**	
Methyl Ethyl Ketone (2-Butanone)	**3.4**	**79**	**9.4**		**6.1**		**13**		**120**		**1600**		**280**		**1600**		ND< 0.88		**6.8**	**J**	**8.0**	**J**	ND< 0.88		**720**		ND< 0.88	
Methyl Isobutyl Ketone (4-Methyl-2-Pentanone)	**0.3**	16	**2.5**		ND< 1.2		**3.2**		ND< 1.2		ND< 1.2		ND< 1.2		ND< 1.2		ND< 1.2		**2.2**		**2.0**		**3.5**		ND< 1.2		**2.9**	
Methyl Tert-Butyl Ether (MTBE)	**0.8**	230	**1.9**		**2.7**		ND< 0.54		ND< 0.54		ND< 0.54		ND< 0.54		ND< 0.54		ND< 0.54		ND< 0.54		ND< 0.54		ND< 0.54		ND< 0.54		ND< 0.54	
Methylene Chloride	**1.4**	310	1.3		0.94		**1.9**		**1.9**		ND< 0.52		ND< 0.52		ND< 0.52		1.2		1.1		0.83		1.1		ND< 0.52		1.1	
N-Heptane	**2.8**	72	ND< 0.61		ND< 0.61		ND< 0.61		**46**		**54**		**43**		ND< 0.61		**44**		ND< 0.61		ND< 0.61		**36**		ND< 0.61		**26**	
N-Hexane	**1.6**	93	**3.0**		**1.8**		**6.3**		**59**		ND< 0.53		ND< 0.53		ND< 0.53		ND< 0.53		**3.4**		**4.3**		ND< 0.53		ND< 0.53		ND< 0.53	
O-Xylene (1,2-Dimethylbenzene)	**1.1**	32	**11**		**6.5**		**13**		**18**		**8.2**		**20**		**6.6**		**21**		**7.6**		**7.6**		**20**		**9.1**		**27**	
p-Bromofluorobenzene			ND< 0		ND< 0		ND< 0		ND< 0		ND< 0		ND< 0		ND< 0		ND< 0		ND< 0		ND< 0		ND< 0		ND< 0		ND< 0	
Propylene			ND< 0.26		ND< 0.26		ND< 0.26		ND< 0.26		ND< 0.26		ND< 0.26		ND< 0.26		ND< 0.26		ND< 0.26		ND< 0.26		ND< 0.26		ND< 0.26		ND< 0.26	
Styrene	**0.3**	**6.2**	**10**		**7.7**		**15**		ND< 0.64		ND< 0.64		**8.2**		ND< 0.64		**11**		**9.2**		**8.9**		**8.8**		ND< 0.64		**8.5**	
Tetrachloroethylene (PCE)	**0.3**	20	**14**		**9.4**		**1.6**		ND< 1.0		ND< 1.0		**0.95**	**J**	ND< 1.0		**4.1**		**2.4**		**2.3**		**0.75**	**J**	ND< 1.0		**2.8**	
Tetrahydrofuran	0.25	19	ND< 0.44		ND< 0.44		ND< 0.44		ND< 0.44		ND< 0.44		ND< 0.44		ND< 0.44		ND< 0.44		ND< 0.44		ND< 0.44		ND< 0.44		ND< 0.44		ND< 0.44	
Toluene	**9.6**	**300**	**13**		7.8		**22**		**150**		**18**		**5900**		**10**		**550**		**11**		**12**		**130**		**20**		**140**	
Trans-1,2-Dichloroethene			ND< 0.59		ND< 0.59		ND< 0.59		ND< 0.59		ND< 0.59		ND< 0.59		ND< 0.59		ND< 0.59		ND< 0.59		ND< 0.59		ND< 0.59		ND< 0.59		ND< 0.59	
Trans-1,3-Dichloropropene	0.25	0.25	ND< 0.68		ND< 0.68		ND< 0.68		ND< 0.68		ND< 0.68		ND< 0.68		ND< 0.68		ND< 0.68		ND< 0.68		ND< 0.68		ND< 0.68		ND< 0.68		ND< 0.68	
Trichloroethylene (TCE)	**0.25**	7.4	**1.0**		ND< 0.81		**1.6**		ND< 0.81		ND< 0.81		ND< 0.81		ND< 0.81		ND< 0.81		**0.75**	**J**	**0.70**	**J**	ND< 0.81		ND< 0.81		ND< 0.81	
Trichlorofluoromethane			2.2		2.2		11		2.5		1.4		2.1		1.3		1.6		2.2		1.9		1.8		1.4		1.6	
Vinyl Acetate			ND< 0.53		ND< 0.53		ND< 0.53		ND< 0.53		ND< 0.53		ND< 0.53		ND< 0.53		ND< 0.53		ND< 0.53		ND< 0.53		ND< 0.53		ND< 0.53		ND< 0.53	
Vinyl Chloride	0.25	0.8	ND< 0.38		ND< 0.38		ND< 0.38		ND< 0.38		ND< 0.38		ND< 0.38		ND< 0.38		ND< 0.38		ND< 0.38		ND< 0.38		ND< 0.38		ND< 0.38		ND< 0.38	

NOTES:

1. Soil vapor samples analytical results are compared to the New York State Department of Health (NYSDOH) Indoor Air Median Concentrations outlined in the FINAL Guidance for Evaluating Soil Vapor Intrusion in the State of New York, dated October 2006.
2. NYSDOH INDOOR AIR MEDIAN CONCENTRATION exceedances are in bold.
3. NYSDOH INDOOR AIR 99TH PERCENTILE CONCENTRATION exceedances are are highlighted yellow.
4. µg/m³ = micrograms per cubic meter
5. VOCs = Volatile Organic Compounds
6. Qualifier (Q) definitions are provided in the official lab reports.

TABLE 11: Volatile Organic Compounds (VOCs) in Soil Vapor
Soil Vapor Sample Results (non-QA/QC)
Hudson River Psychiatric Center - North BCP Site, Poughkeepsie, NY
PVE Sheffler File #560909

		Date Sampled	7/22/2014		7/22/2014		12/23/2014		12/23/2014		12/23/2014		12/23/2014		12/23/2014		12/23/2014		12/23/2014		12/23/2014		12/23/2014	
		Location	PH-SV-4		PH-SV-5		FD-SV-1		MNTC-SV-1		MRT-SV-1		SV-1		SV-2		SV-3		SV-4		SV-5		SV-6		SV-7	
		Sample Type	Soil Vapor		Soil Vapor		Soil Vapor		Soil Vapor		Soil Vapor		Soil Vapor		Soil Vapor		Soil Vapor		Soil Vapor		Soil Vapor		Soil Vapor		Soil Vapor	
		Sample ID	PH-SV-4 20140722		PH-SV-5 20140722		FD-SV-1		MNTC-SV-1		MRT-SV-1		SV-1		SV-2		SV-3		SV-4		SV-5		SV-6		SV-7	
Analyte	NYSDOH INDOOR AIR MEDIAN CONCENTRATION	NYSDOH INDOOR AIR 99TH PERCENTILE	Result	Q	Result	Q	Result	Q	Result	Q	Result	Q	Result	Q	Result	Q	Result	Q	Result	Q	Result	Q	Result	Q	Result	Q
VOCs (µg/m³)																										
1,1,1-Trichloroethane	**0.3**	41	ND< 0.82		ND< 0.82		ND< 0.82		**0.87**		ND< 0.82		ND< 0.82		ND< 0.82		**0.65**	J	**13**		ND< 0.82		ND< 0.82		**28**	
1,1,2,2-Tetrachloroethane	0.25	0.8	ND< 1.0		ND< 1.0		ND< 1.0		ND< 1.0		ND< 1.0		ND< 1.0		ND< 1.0		ND< 1.0		ND< 1.0		ND< 1.0		ND< 1.0		ND< 1.0	
1,1,2-Trichloro-1,2,2-Trifluoroethane			ND< 1.1		ND< 1.1		ND< 1.1		0.84	J	1.0	J	ND< 1.1		ND< 1.1		ND< 1.1		ND< 1.1		ND< 1.1		ND< 1.1		1.1	J
1,1,2-Trichloroethane	0.25	1	ND< 0.82		ND< 0.82		ND< 0.82		ND< 0.82		ND< 0.82		ND< 0.82		ND< 0.82		ND< 0.82		ND< 0.82		ND< 0.82		ND< 0.82		ND< 0.82	
1,1-Dichloroethane	0.25	0.4	ND< 0.61		ND< 0.61		ND< 0.61		ND< 0.61		ND< 0.61		ND< 0.61		ND< 0.61		ND< 0.61		ND< 0.61		ND< 0.61		ND< 0.61		ND< 0.61	
1,1-Dichloroethene	0.25	6.3	ND< 0.59		ND< 0.59		ND< 0.59		ND< 0.59		ND< 0.59		ND< 0.59		ND< 0.59		ND< 0.59		ND< 0.59		ND< 0.59		ND< 0.59		ND< 0.59	
1,2,4-Trichlorobenzene	0.25	26	ND< 1.1		ND< 1.1		ND< 1.1		ND< 1.1		ND< 1.1		ND< 1.1		ND< 1.1		ND< 1.1		ND< 1.1		ND< 1.1		ND< 1.1		ND< 1.1	
1,2,4-Trimethylbenzene	**1.9**	**35**	**20**		**16**		ND< 0.74		ND< 0.74		0.88		ND< 0.74		ND< 0.74		ND< 0.74		ND< 0.74		0.59	J	0.54	J	ND< 0.74	
1,2-Dibromoethane (Ethylene Dibromide)	0.25	0.25	ND< 1.2		ND< 1.2		ND< 1.2		ND< 1.2		ND< 1.2		ND< 1.2		ND< 1.2		ND< 1.2		ND< 1.2		ND< 1.2		ND< 1.2		ND< 1.2	
1,2-Dichlorobenzene	0.25	2.3	ND< 0.90		ND< 0.90		ND< 0.90		ND< 0.90		ND< 0.90		ND< 0.90		ND< 0.90		ND< 0.90		ND< 0.90		ND< 0.90		ND< 0.90		ND< 0.90	
1,2-Dichloroethane	**0.25**	**0.4**	ND< 0.61		ND< 0.61		ND< 0.61		ND< 0.61		ND< 0.61		ND< 0.61		ND< 0.61		ND< 0.61		ND< 0.61		ND< 0.61		ND< 0.61		ND< 0.61	
1,2-Dichloropropane	0.25	9	ND< 0.69		ND< 0.69		ND< 0.69		ND< 0.69		ND< 0.69		ND< 0.69		ND< 0.69		ND< 0.69		ND< 0.69		ND< 0.69		ND< 0.69		ND< 0.69	
1,2-Dichlorotetrafluoroethane	0.25	23	ND< 1.0		ND< 1.0		ND< 1.0		ND< 1.0		ND< 1.0		ND< 1.0		ND< 1.0		ND< 1.0		ND< 1.0		ND< 1.0		ND< 1.0		ND< 1.0	
1,3,5-Trimethylbenzene (Mesitylene)	**0.6**	25	**7.5**		**6.8**		ND< 0.74		ND< 0.74		ND< 0.74		ND< 0.74		ND< 0.74		ND< 0.74		ND< 0.74		ND< 0.74		ND< 0.74		ND< 0.74	
1,3-Butadiene			ND< 0.33		ND< 0.33		ND< 0.33		ND< 0.33		ND< 0.33		ND< 0.33		ND< 0.33		ND< 0.33		ND< 0.33		ND< 0.33		ND< 0.33		ND< 0.33	
1,3-Dichlorobenzene	0.25	1.6	ND< 0.90		ND< 0.90		ND< 0.90		ND< 0.90		ND< 0.90		ND< 0.90		ND< 0.90		ND< 0.90		ND< 0.90		ND< 0.90		ND< 0.90		ND< 0.90	
1,4-Dichlorobenzene	0.25	25	ND< 0.90		ND< 0.90		ND< 0.90		ND< 0.90		ND< 0.90		ND< 0.90		ND< 0.90		ND< 0.90		ND< 0.90		ND< 0.90		ND< 0.90		ND< 0.90	
1,4-Dioxane (P-Dioxane)			ND< 1.1		ND< 1.1		ND< 1.1		ND< 1.1		ND< 1.1		ND< 1.1		ND< 1.1		ND< 1.1		ND< 1.1		ND< 1.1		ND< 1.1		ND< 1.1	
2,2,4-Trimethylpentane			7.7		5.9		ND< 0.70		ND< 0.70		ND< 0.70		ND< 0.70		0.47	J	ND< 0.70		ND< 0.70		ND< 0.70		ND< 0.70		ND< 0.70	
2-Hexanone	**0.3**	**16**	**9.5**	J	**15**		ND< 1.2		ND< 1.2		ND< 1.2		ND< 1.2		ND< 1.2		ND< 1.2		ND< 1.2		ND< 1.2		ND< 1.2		ND< 1.2	
4-Ethyltoluene	**2.1**	120	**7.9**		**7.1**		ND< 0.74		ND< 0.74		ND< 0.74		ND< 0.74		ND< 0.74		ND< 0.74		ND< 0.74		ND< 0.74		ND< 0.74		ND< 0.74	
Acetone	**21**	**200**	**1500**		**560**		4.7		3.9		4.7		4.6		5.9	J	4.8		3.4		4.4		3.6		7.4	
Allyl Chloride (3-Chloropropene)			ND< 0.47		ND< 0.47		ND< 0.47		ND< 0.47		ND< 0.47		ND< 0.47		ND< 0.47		ND< 0.47		ND< 0.47		ND< 0.47		ND< 0.47		ND< 0.47	
Benzene	**2.1**	120	**8.7**		**6.4**		ND< 0.48		ND< 0.48		ND< 0.48		ND< 0.48		ND< 0.48		ND< 0.48		ND< 0.48		ND< 0.48		ND< 0.48		ND< 0.48	
Benzyl Chloride			ND< 0.86		ND< 0.86		ND< 0.86		ND< 0.86		ND< 0.86		ND< 0.86		ND< 0.86		ND< 0.86		ND< 0.86		ND< 0.86		ND< 0.86		ND< 0.86	
Bromodichloromethane			ND< 1.0		ND< 1.0		ND< 1.0		ND< 1.0		ND< 1.0		ND< 1.0		ND< 1.0		ND< 1.0		ND< 1.0		ND< 1.0		ND< 1.0		ND< 1.0	
Bromoethene/ Vinyl Bromide			ND< 0.66		ND< 0.66		ND< 0.66		ND< 0.66		ND< 0.66		ND< 0.66		ND< 0.66		ND< 0.66		ND< 0.66		ND< 0.66		ND< 0.66		ND< 0.66	
Bromoform			ND< 1.6		ND< 1.6		ND< 1.6		ND< 1.6		ND< 1.6		ND< 1.6		ND< 1.6		ND< 1.6		ND< 1.6		ND< 1.6		ND< 1.6		ND< 1.6	
Bromomethane	0.25	3.2	ND< 0.58		ND< 0.58		ND< 0.58		ND< 0.58		ND< 0.58		ND< 0.58		ND< 0.58		ND< 0.58		ND< 0.58		ND< 0.58		ND< 0.58		ND< 0.58	
Carbon Disulfide			2.1		2.9		ND< 0.47		ND< 0.47		ND< 0.47		0.68		0.78		ND< 0.47		ND< 0.47		ND< 0.47		ND< 0.47		ND< 0.47	
Carbon Tetrachloride	0.25	3.2	ND< 0.94		ND< 0.94		ND< 0.94		ND< 0.94		ND< 0.94		ND< 0.94		ND< 0.94		ND< 0.94		ND< 0.94		ND< 0.94		ND< 0.94		ND< 0.94	
Chlorobenzene	0.25	3.2	ND< 0.69		ND< 0.69		ND< 0.69		ND< 0.69		ND< 0.69		ND< 0.69		ND< 0.69		ND< 0.69		ND< 0.69		ND< 0.69		ND< 0.69		ND< 0.69	
Chloroethane	0.25	0.9	ND< 0.40		ND< 0.40		ND< 0.40		ND< 0.40		ND< 0.40		ND< 0.40		ND< 0.40		ND< 0.40		ND< 0.40		ND< 0.40		ND< 0.40		ND< 0.40	
Chloroform	**0.25**	**13**	**0.98**		**1.7**		ND< 0.73		**1.0**		ND< 0.73		**0.83**		ND< 0.73		ND< 0.73		ND< 0.73		ND< 0.73		ND< 0.73		**0.68**	J
Chloromethane	**0.5**	14	ND< 0.31		ND< 0.31		ND< 0.31		ND< 0.31		ND< 0.31		ND< 0.31		ND< 0.31		ND< 0.31		ND< 0.31		ND< 0.31		ND< 0.31		ND< 0.31	
Cis-1,2-Dichloroethylene	0.25	4.6	ND< 0.59		ND< 0.59		ND< 0.59		ND< 0.59		ND< 0.59		ND< 0.59		ND< 0.59		ND< 0.59		ND< 0.59		ND< 0.59		ND< 0.59		ND< 0.59	
Cis-1,3-Dichloropropene	0.25	2.1	ND< 0.68		ND< 0.68		ND< 0.68		ND< 0.68		ND< 0.68		ND< 0.68		ND< 0.68		ND< 0.68		ND< 0.68		ND< 0.68		ND< 0.68		ND< 0.68	
Cyclohexane	**0.8**	88	**5.7**		**4.7**		ND< 0.52		ND< 0.52		ND< 0.52		0.72		0.48	J	ND< 0.52		ND< 0.52		ND< 0.52		ND< 0.52		ND< 0.52	
Dibromochloromethane			ND< 1.3		ND< 1.3		ND< 1.3		ND< 1.3		ND< 1.3		ND< 1.3		ND< 1.3		ND< 1.3		ND< 1.3		ND< 1.3		ND< 1.3		ND< 1.3	
Dichlorodifluoromethane	**0.25**	180	**2.6**		**2.1**		**2.3**		**2.2**		ND< 0.74		**2.9**		**2.8**		**2.3**		**2.4**		**2.5**		**2.5**		**2.4**	
Ethyl Acetate			ND< 0.90		ND< 0.90		ND< 0.90		ND< 0.90		ND< 0.90		ND< 0.90		ND< 0.90		ND< 0.90		ND< 0.90		ND< 0.90		ND< 0.90		ND< 0.90	
Ethylbenzene	**1**	26	**12**		**9.7**		ND< 0.65		ND< 0.65		ND< 0.65		ND< 0.65		ND< 0.65		ND< 0.65		ND< 0.65		ND< 0.65		ND< 0.65		ND< 0.65	
Hexachlorobutadiene	0.25	29	ND< 1.6		ND< 1.6		ND< 1.6		ND< 1.6		ND< 1.6		ND< 1.6		ND< 1.6		ND< 1.6		ND< 1.6		ND< 1.6		ND< 1.6		ND< 1.6	
Isopropanol			ND< 0.37		ND< 0.37		1.4		3.7		2.2		5.2		4.3		1.7		1.4		2.5		1.1		5.7	
M And P Xylenes	**1.5**	**46**	**42**		**32**		0.48	J	ND< 1.3		0.78	J	ND< 1.3		ND< 1.3		ND< 1.3		ND< 1.3		ND< 1.3		0.48	J	0.48	J
Methyl Ethyl Ketone (2-Butanone)	**3.4**	**79**	**66**		**110**		0.59	J	0.47	J	0.59	J	1.9		0.59	J	ND< 0.88		ND< 0.88		0.53	J	0.41	J	0.83	J
Methyl Isobutyl Ketone (4-Methyl-2-Pentanone)	**0.3**	16	**2.7**		ND< 1.2		ND< 1.2		ND< 1.2		ND< 1.2		ND< 1.2		**0.49**	J	ND< 1.2		ND< 1.2		ND< 1.2		ND< 1.2		ND< 1.2	
Methyl Tert-Butyl Ether (MTBE)	**0.8**	230	ND< 0.54		ND< 0.54		ND< 0.54		ND< 0.54		ND< 0.54		ND< 0.54		ND< 0.54		ND< 0.54		ND< 0.54		ND< 0.54		ND< 0.54		ND< 0.54	
Methylene Chloride	**1.4**	310	1.2		ND< 0.52		ND< 0.52		ND< 0.52		ND< 0.52		ND< 0.52		ND< 0.52		ND< 0.52		ND< 0.52		ND< 0.52		ND< 0.52		0.35	J
N-Heptane	**2.8**	72	**22**		**13**		ND< 0.61		ND< 0.61		ND< 0.61		ND< 0.61		0.45	J	ND< 0.61		ND< 0.61		ND< 0.61		ND< 0.61		ND< 0.61	
N-Hexane	**1.6**	93	ND< 0.53		ND< 0.53		ND< 0.53		ND< 0.53		0.56		ND< 0.53		0.56		0.39	J	0.42	J	ND< 0.53		0.35	J	ND< 0.53	
O-Xylene (1,2-Dimethylbenzene)	**1.1**	32	**16**		**13**		ND< 0.65		ND< 0.65		0.43	J	ND< 0.65		ND< 0.65		ND< 0.65		ND< 0.65		ND< 0.65		ND< 0.65		ND< 0.65	
p-Bromofluorobenzene			ND< 0		ND< 0		ND< 0		ND< 0		ND< 0		ND< 0		ND< 0	S	ND< 0		ND< 0		ND< 0		ND< 0		ND< 0	
Propylene			ND< 0.26		ND< 0.26		ND< 0.26		ND< 0.26		ND< 0.26		ND< 0.26		ND< 0.26		ND< 0.26		ND< 0.26		ND< 0.26		ND< 0.26		ND< 0.26	
Styrene	**0.3**	**6.2**	**6.2**		**7.0**		ND< 0.64		ND< 0.64		**0.81**		ND< 0.64		ND< 0.64		ND< 0.64		ND< 0.64		**0.47**	J	ND< 0.64		**0.60**	J
Tetrachloroethylene (PCE)	**0.3**	20	**0.88**	J	**0.75**	J	**2.8**		ND< 1.0		**1.2**		ND< 1.0		ND< 1.0		ND< 1.0		ND< 1.0		ND< 1.0		ND< 1.0		ND< 1.0	
Tetrahydrofuran	0.25	19	ND< 0.44		ND< 0.44		ND< 0.44		ND< 0.44		ND< 0.44		ND< 0.44		ND< 0.44		ND< 0.44		ND< 0.44		ND< 0.44		ND< 0.44		ND< 0.44	
Toluene	**9.6**	**300**	**100**		**340**		1.9		1.1		1.2		0.68		1.2		1.4		1.2		1.3		1.3		1.7	
Trans-1,2-Dichloroethene			ND< 0.59		ND< 0.59		ND< 0.59		ND< 0.59		ND< 0.59		ND< 0.59		ND< 0.59		ND< 0.59		ND< 0.59		ND< 0.59		ND< 0.59		ND< 0.59	
Trans-1,3-Dichloropropene	0.25	0.25	ND< 0.68		ND< 0.68		ND< 0.68		ND< 0.68		ND< 0.68		ND< 0.68		ND< 0.68		ND< 0.68		ND< 0.68		ND< 0.68		ND< 0.68		ND< 0.68	
Trichloroethylene (TCE)	**0.25**	7.4	ND< 0.81		ND< 0.81		ND< 0.81		ND< 0.81		ND< 0.81		ND< 0.81		**0.75**	J	ND< 0.81		ND< 0.81		ND< 0.81		ND< 0.81		ND< 0.81	
Trichlorofluoromethane			1.6		6.2		0.84		1.0		1.0		9.1		0.96		0.90		0.84		1.1		1.0		3.6	
Vinyl Acetate			ND< 0.53		ND< 0.53		ND< 0.53		ND< 0.53		ND< 0.53		ND< 0.53		ND< 0.53		ND< 0.53		ND< 0.53		ND< 0.53		ND< 0.53		ND< 0.53	
Vinyl Chloride	0.25	0.8	ND< 0.38		ND< 0.38		ND< 0.38		ND< 0.38		ND< 0.38		ND< 0.38		ND< 0.38		ND< 0.38		ND< 0.38		ND< 0.38		ND< 0.38		ND< 0.38	

NOTES:

1. Soil vapor samples analytical results are compared to the New York State Department of Health (NYSDOH) Indoor Air Median Concentrations outlined in the FINAL Guidance for Evaluating Soil Vapor Intrusion in the State of New York, dated October 2006.

2. NYSDOH INDOOR AIR MEDIAN CONCENTRATION exceedances are in bold.

3. NYSDOH INDOOR AIR 99TH PERCENTILE CONCENTRATION exceedances are are highlighted yellow.

4. µg/m³ = micrograms per cubic meter

5. VOCs = Volatile Organic Compounds

6. Qualifier (Q) definitions are provided in the official lab reports.

APPENDICES

Appendix A – Boring Logs

SOIL BORING LOG

BOREHOLE NO.: **AG-1**

TOTAL DEPTH: **13.25'**

PROJECT INFORMATION		DRILLING INFORMATION	
PROJECT #:	**560909**	DRILLING CO.:	**HES**
SITE LOCATION:	**Hudson River Psych Center North**	RIG TYPE:	**Geoprobe**
LOGGED BY:	**Stephanie Lewison**	METHOD OF DRILLING:	**Direct Push**
PROJECT MANAGER:	**Christopher Brown**	SAMPLING METHODS:	**4' Macro Core**
DATES DRILLED:	**5-5-14**	HAMMER WT./DROP	**N/A**
		DEPTH TO WATER	**8.5'**

NOTES:
Sunny, 60F

▽ Water level during drilling

DEPTH	SOIL SYMBOLS	SOIL DESCRIPTION		Sample Depth	PID (ppm)
0		ASPHALT: Asphalt/Concrete			
		COAL: Coal fragments			
		SHATTERED: Broken rock			
		SC: Brown, moist, sand and clay, some gravel		Sampled 2.25-4'	0.0 ppm
-5		ML: Brown, very dense clay			
		GM: Brown, wet, gravel and sand			
		GW: Brown, saturated, gravel with coarse sand. Refusal on shale at 13.25'.	▽	Sampled 8.5-10'	0.0 ppm
-10					

PVE Sheffler
One Civic Center Plaza
Suite 501
Poughkeepsie, New York
(845) 454-2544

SOIL BORING LOG

BOREHOLE NO.: **AG-2**

TOTAL DEPTH: **16'**

PROJECT INFORMATION		DRILLING INFORMATION	
PROJECT #:	**560909**	DRILLING CO.:	**HES**
SITE LOCATION:	**Hudson River Psych Center North**	RIG TYPE:	**Geoprobe**
LOGGED BY:	**Stephanie Lewison**	METHOD OF DRILLING:	**Direct Push**
PROJECT MANAGER:	**Christopher Brown**	SAMPLING METHODS:	**4' Macro Core**
DATES DRILLED:	**5-5-14**	HAMMER WT./DROP	**N/A**
		DEPTH TO WATER	**8'**

NOTES:
Sunny, 60F

▽ Water level during drilling

DEPTH	SOIL SYMBOLS	SOIL DESCRIPTION		Sample Depth	PID (ppm)
0		ASPHALT: Asphalt/Concrete			
		ML: Dense clay, some sand, some gravel		Sampled 1-3'	0.0 ppm
		SC: Moist, sand, clay, gravel			
-5		ML: Brown, dry to moist, dense clay			
		GM: Saturated, sand and gravel	▽		
		ML: Wet, dense clay		Sampled 8-9'	0.0 ppm
-10		GM: Saturated, sand and gravel			
		ML: Moist, dense clay			
-15		GM: Saturated, sand and gravel			

PVE Sheffler
One Civic Center Plaza
Suite 501
Poughkeepsie, New York
(845) 454-2544

SOIL BORING LOG

BOREHOLE NO.: **AG-3**

TOTAL DEPTH: **20'**

PROJECT INFORMATION		DRILLING INFORMATION	
PROJECT #:	**560909**	DRILLING CO.:	**HES**
SITE LOCATION:	**Hudson River Psych Center North**	RIG TYPE:	**Geoprobe**
LOGGED BY:	**Stephanie Lewison**	METHOD OF DRILLING:	**Direct Push**
PROJECT MANAGER:	**Christopher Brown**	SAMPLING METHODS:	**4' Macro Core**
DATES DRILLED:	**5-5-14**	HAMMER WT./DROP	**N/A**
		DEPTH TO WATER	**15'**

NOTES:
Sunny, 60F. Depth to water in borehole was 2" below grade.

Water level during drilling

DEPTH	SOIL SYMBOLS	SOIL DESCRIPTION	Sample Depth	PID (ppm)
0		ASPHALT: Asphalt, wet		
		ML: Moist to wet, sand, clay	Sampled 1-2.5'	0.0 ppm
-5				
		GM: Saturated gravel		
		ML: Dry to moist, clay, some sand		
-10				
		GM: Saturated, gravel/rock		
-15		SW: Saturated, coarse sand, gravel	Sampled 15-17'	
		GM: Saturated, gravel, some sand		
-20				

PVE Sheffler
One Civic Center Plaza
Suite 501
Poughkeepsie, New York
(845) 454-2544

SOIL BORING LOG

BOREHOLE NO.: **AG-4**

TOTAL DEPTH: **16'**

PROJECT INFORMATION		DRILLING INFORMATION	
PROJECT #:	**560909**	DRILLING CO.:	**HES**
SITE LOCATION:	**Hudson River Psych Center North**	RIG TYPE:	**Geoprobe**
LOGGED BY:	**Stephanie Lewison**	METHOD OF DRILLING:	**Direct Push**
PROJECT MANAGER:	**Christopher Brown**	SAMPLING METHODS:	**4' Macro Core**
DATES DRILLED:	**5-5-14**	HAMMER WT./DROP	**N/A**
		DEPTH TO WATER	**7.5'**

NOTES:
Sunny, 60F.

▽ Water level during drilling

DEPTH	SOIL SYMBOLS	SOIL DESCRIPTION		Sample Depth	PID (ppm)
0		ASPHALT: Asphalt/concrete			
		ML: Dark brown, dry to moist, clay and sand			
		ML: Medium brown, moist, clay and sand			
-5		ML: Gray-green-brown mixed color, moist, clay and sand		Sampled 4.25-5'	0.0 ppm
		GM: Saturated, brown, coarse sand, gravel	▽	Sampled 7.5-9'	0.0 ppm
-10					
-15					

PVE Sheffler
One Civic Center Plaza
Suite 501
Poughkeepsie, New York
(845) 454-2544

SOIL BORING LOG

BOREHOLE NO.: **AG-5**

TOTAL DEPTH: **12'**

PROJECT INFORMATION		DRILLING INFORMATION	
PROJECT #:	**560909**	DRILLING CO.:	**HES**
SITE LOCATION:	**Hudson River Psych Center North**	RIG TYPE:	**Geoprobe**
LOGGED BY:	**Stephanie Lewison**	METHOD OF DRILLING:	**Direct Push**
PROJECT MANAGER:	**Christopher Brown**	SAMPLING METHODS:	**4' Macro Core**
DATES DRILLED:	**5-5-14**	HAMMER WT./DROP	**N/A**
		DEPTH TO WATER	**8'**

NOTES:
Sunny, 60F.

Water level during drilling

DEPTH	SOIL SYMBOLS	SOIL DESCRIPTION		Sample Depth	PID (ppm)
0		TOPSOIL: Topsoil			
		COAL: Dry, coal fragments			
		SC: Dry, sand and clay		Sampled 3-4'	0.0 ppm
-5		ML: Moist, mottled color, dense clay. Refusal on bedrock at 12'.			
				Sampled 8-9'	
-10					

PVE Sheffler
One Civic Center Plaza
Suite 501
Poughkeepsie, New York
(845) 454-2544

SOIL BORING LOG

BOREHOLE NO.: **AG-6**

TOTAL DEPTH: **10.25'**

PROJECT INFORMATION		DRILLING INFORMATION	
PROJECT #:	**560909**	DRILLING CO.:	**HES**
SITE LOCATION:	**Hudson River Psych Center North**	RIG TYPE:	**Geoprobe**
LOGGED BY:	**Stephanie Lewison**	METHOD OF DRILLING:	**Direct Push**
PROJECT MANAGER:	**Christopher Brown**	SAMPLING METHODS:	**4' Macro Core**
DATES DRILLED:	**5-5-14**	HAMMER WT./DROP	**N/A**
		DEPTH TO WATER	**6'**

NOTES:
Sunny, 60F.

Water level during drilling

DEPTH	SOIL SYMBOLS	SOIL DESCRIPTION		Sample Depth	PID (ppm)
0		COAL: Slag and coal fragments			
		SW: Brown, moist, sand, trace gravel		Sampled 2-4'	
-5		GM: Wet, gravel and sand. Refusal on shale at 10.25'.		Sampled 8-10'	
-10					

PVE Sheffler
One Civic Center Plaza
Suite 501
Poughkeepsie, New York
(845) 454-2544

SOIL BORING LOG

BOREHOLE NO.: **AG-8**

TOTAL DEPTH: **14.66'**

PROJECT INFORMATION		DRILLING INFORMATION	
PROJECT #:	**560909**	DRILLING CO.:	**HES**
SITE LOCATION:	**Hudson River Psych Center North**	RIG TYPE:	**Geoprobe**
LOGGED BY:	**Stephanie Lewison**	METHOD OF DRILLING:	**Direct Push**
PROJECT MANAGER:	**Christopher Brown**	SAMPLING METHODS:	**4' Macro Core**
DATES DRILLED:	**5-6-14**	HAMMER WT./DROP	**N/A**
		DEPTH TO WATER	**3.75'**

NOTES:
Sunny, 55F.

▽ Water level during drilling

DEPTH	SOIL SYMBOLS	SOIL DESCRIPTION		Sample Depth	PID (ppm)
0		COAL: Coal fragments			
		GC: Brown, dry (more moist with depth), gravel and sand		Sampled 0-2"	0.0 ppm
				Sampled 1-2'	0.0 ppm
		GC: Brown, wet, gravel and sand	▽	Sampled 3.75-5'	
-5					
-10		GM: Saturated then drier ~12', gravel. Refusal on rock.			

PVE Sheffler
One Civic Center Plaza
Suite 501
Poughkeepsie, New York
(845) 454-2544

SOIL BORING LOG

BOREHOLE NO.: **AG-9**

TOTAL DEPTH: **12'**

PROJECT INFORMATION		DRILLING INFORMATION	
PROJECT #:	**560909**	DRILLING CO.:	**HES**
SITE LOCATION:	**Hudson River Psych Center North**	RIG TYPE:	**Geoprobe**
LOGGED BY:	**Stephanie Lewison**	METHOD OF DRILLING:	**Direct Push**
PROJECT MANAGER:	**Christopher Brown**	SAMPLING METHODS:	**4' Macro Core**
DATES DRILLED:	**5-6-14**	HAMMER WT./DROP	**N/A**
		DEPTH TO WATER	**5.5'**

NOTES:
Sunny, 55F.

Water level during drilling

DEPTH	SOIL SYMBOLS	SOIL DESCRIPTION		Sample Depth	PID (ppm)
0	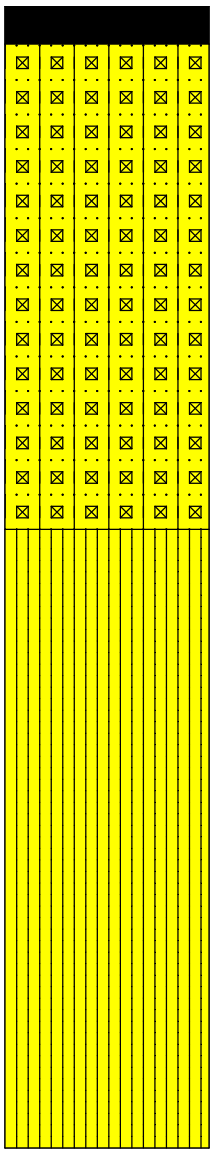	COAL: Coal fragments and slag			
		GM: Brown, dry, gravel and sand		Sampled 0-2"	2.6 ppm
				Sampled 1-2'	0.1 ppm
-5		ML: Brown, wet, dense clay			
				Sampled 5-6.5'	0.0 ppm
-10					

SOIL BORING LOG

PVE Sheffler

One Civic Center Plaza
Suite 501
Poughkeepsie, New York
(845) 454-2544

BOREHOLE NO.: **AG-10**

TOTAL DEPTH: **18'**

PROJECT INFORMATION		DRILLING INFORMATION	
PROJECT #:	**560909**	DRILLING CO.:	**HES**
SITE LOCATION:	**Hudson River Psych Center North**	RIG TYPE:	**Geoprobe**
LOGGED BY:	**Stephanie Lewison**	METHOD OF DRILLING:	**Direct Push**
PROJECT MANAGER:	**Christopher Brown**	SAMPLING METHODS:	**4' Macro Core**
DATES DRILLED:	**5-6-14**	HAMMER WT./DROP	**N/A**
		DEPTH TO WATER	**6'**

NOTES:
Sunny, 55F.

▽ Water level during drilling

DEPTH	SOIL SYMBOLS	SOIL DESCRIPTION	Sample Depth	PID (ppm)
0		GM: Brown, dry, gravel and sand/silt	Sampled 0-2"	0.8 ppm
			Sampled 1-2'	2.5 ppm
-5		GC: Dry, gravel and sand		
		ML: Brown, moist to wet, dense clay, some gravel		
-10		GM: Wet, gravel and sand	Sampled 9-12'	1.9 ppm
		ML: Wet, clay		
		GM: Saturated, gravel and sand		
		ML: Wet, clay		
-15		GM: Saturated, gravel and sand. Refusal at 18'.		

PVE Sheffler
One Civic Center Plaza
Suite 501
Poughkeepsie, New York
(845) 454-2544

SOIL BORING LOG

BOREHOLE NO.: **AG-11**

TOTAL DEPTH: **15.75'**

PROJECT INFORMATION		DRILLING INFORMATION	
PROJECT #:	**560909**	DRILLING CO.:	**HES**
SITE LOCATION:	**Hudson River Psych Center North**	RIG TYPE:	**Geoprobe**
LOGGED BY:	**Stephanie Lewison**	METHOD OF DRILLING:	**Direct Push**
PROJECT MANAGER:	**Christopher Brown**	SAMPLING METHODS:	**4' Macro Core**
DATES DRILLED:	**5-6-14**	HAMMER WT./DROP	**N/A**
		DEPTH TO WATER	**6'**

NOTES:
Sunny, 55F.

Water level during drilling

DEPTH	SOIL SYMBOLS	SOIL DESCRIPTION	Sample Depth	PID (ppm)
0		GM: Brown, dry, gravel and sand	Sampled 0-2"	2.5 ppm
			Sampled 1-2'	0.0 ppm
-5		ML: Moist, clay		
		GM: Moist, gravel and sand		
		ML: Moist, dense clay	Sampled 6-8'	5.3 ppm
-10		GM: Poor recovery (only 1' of recovery for 8-12' interval), moist to wet, gravel and sand		
-15		GM: Saturated, gravel and sand. Refusal at 15.75' on shale.		

PVE Sheffler
One Civic Center Plaza
Suite 501
Poughkeepsie, New York
(845) 454-2544

SOIL BORING LOG

BOREHOLE NO.: **AG-12**

TOTAL DEPTH: **17'**

PROJECT INFORMATION		DRILLING INFORMATION	
PROJECT #:	**560909**	DRILLING CO.:	**HES**
SITE LOCATION:	**Hudson River Psych Center North**	RIG TYPE:	**Geoprobe**
LOGGED BY:	**Stephanie Lewison**	METHOD OF DRILLING:	**Direct Push**
PROJECT MANAGER:	**Christopher Brown**	SAMPLING METHODS:	**4' Macro Core**
DATES DRILLED:	**5-6-14**	HAMMER WT./DROP	**N/A**
		DEPTH TO WATER	**7'**

NOTES:
Sunny, 55F.

Water level during drilling

DEPTH	SOIL SYMBOLS	SOIL DESCRIPTION	Sample Depth	PID (ppm)
0		COAL: Coal fragments and slag	Sampled 0-2"	3.5 ppm
		GM: Brown, dry, gravel and sand	Sampled 1-2'	0.0 ppm
-5				
		ML: Brown, moist/wet, clay with lenses of gravel interspersed	Sampled 7-9'	3.3 ppm
-10				
		GM: Saturated, gravel and sand. Refusal at 17'.		
-15				

PVE Sheffler

48 Springside Avenue
Poughkeepsie, New York
(845) 454-2544

SOIL BORING LOG

BOREHOLE NO.: **AG-13**

TOTAL DEPTH: **15'**

PROJECT INFORMATION		DRILLING INFORMATION	
PROJECT #:	**560909**	DRILLING CO.:	**GeoLogic**
SITE LOCATION:	**HRPC**	RIG TYPE:	**Geoprobe 6620**
LOGGED BY:	**Alan Mason**	METHOD OF DRILLING:	**Direct Push**
PROJECT MANAGER:	**Christopher Brown**	SAMPLING METHODS:	**4' Macro Core**
DATES DRILLED:	**7/15/2014**	HAMMER WT./DROP	**N/A**
		DEPTH TO WATER	**9.72'**

NOTES:
Groundwater at 9.72' as per water meter; refusal at 15'.

Water level during drilling

DEPTH (FT)	SOIL SYMBOLS	SOIL DESCRIPTION	Sample Depth	PID (ppm)
00		Slag/Coal Ash: slag; coal ash; fill	Sampled 0-2"	0.0
		SP: light brown/grey SAND (f-vf) some silt, gravel	Sampled 12-24"	0.0
		SP: light brown SAND (c-m) some gravel trace silt	Sampled 7.5-9'	0.0
10		GM: light brown SAND (c-m) and GRAVEL (saturated)		
		Cobble: grey shale		
		SP: light brown/grey SAND (f-vf) some silt, gravel trace clay		

PVE Sheffler
One Civic Center Plaza
Suite 501
Poughkeepsie, New York
(845) 454-2544

SOIL BORING LOG

BOREHOLE NO.: **AG-SS-1**

TOTAL DEPTH: **4'**

PROJECT INFORMATION		DRILLING INFORMATION	
PROJECT #:	**560909**	DRILLING CO.:	**GeoLogic**
SITE LOCATION:	**HRPC**	RIG TYPE:	**Geoprobe 6620**
LOGGED BY:	**Alan Mason**	METHOD OF DRILLING:	**Direct Push**
PROJECT MANAGER:	**Christopher Brown**	SAMPLING METHODS:	**4' Macro Core**
DATES DRILLED:	**7/15/2014**	HAMMER WT./DROP	**N/A**
		DEPTH TO WATER	**N/A**

NOTES:

Water level during drilling

DEPTH	SOIL SYMBOLS	SOIL DESCRIPTION		Sample Depth	PID (ppm)
0		Slag/Coal Ash: slag; coal ash		Sampled 0-2"	0.0
		Fill: brick: fill			
		SP: yellow/light brown SAND (f-vf), some gravel, trace silt		Sampled 12-24"	0.0

PVE Sheffler
One Civic Center Plaza
Suite 501
Poughkeepsie, New York
(845) 454-2544

SOIL BORING LOG

BOREHOLE NO.: **AG-SS-2**

TOTAL DEPTH: **4'**

PROJECT INFORMATION		DRILLING INFORMATION	
PROJECT #:	**560909**	DRILLING CO.:	**GeoLogic**
SITE LOCATION:	**HRPC**	RIG TYPE:	**Geoprobe 6620**
LOGGED BY:	**Alan Mason**	METHOD OF DRILLING:	**Direct Push**
PROJECT MANAGER:	**Christopher Brown**	SAMPLING METHODS:	**4' Macro Core**
DATES DRILLED:	**7/15/2014**	HAMMER WT./DROP	**N/A**
		DEPTH TO WATER	**N/A**

NOTES:

Water level during drilling

DEPTH	SOIL SYMBOLS	SOIL DESCRIPTION		Sample Depth	PID (ppm)
0		Slag/Coal Ash: slag; coal ash		Sampled 0-2"	0.0
		Fill: light brown silty SAND and fill some small gravel trace brick, wood		Sampled 12-24"	0.0
		SP: yellow/light brown SAND (f-vf) some gravel trace silt			

PVE Sheffler
One Civic Center Plaza
Suite 501
Poughkeepsie, New York
(845) 454-2544

SOIL BORING LOG

BOREHOLE NO.: **CW-2**

TOTAL DEPTH: **20'**

PROJECT INFORMATION		DRILLING INFORMATION	
PROJECT #:	**560909**	DRILLING CO.:	**HES**
SITE LOCATION:	**Hudson River Psych Center North**	RIG TYPE:	**Geoprobe**
LOGGED BY:	**Stephanie Lewison**	METHOD OF DRILLING:	**Direct Push**
PROJECT MANAGER:	**Christopher Brown**	SAMPLING METHODS:	**4' Macro Core**
DATES DRILLED:	**5-12-14**	HAMMER WT./DROP	**N/A**
		DEPTH TO WATER	**19'**

NOTES:
Sunny, 75F.

Water level during drilling

DEPTH	SOIL SYMBOLS	SOIL DESCRIPTION		Sample Depth	PID (ppm)
0		TOPSOIL: Topsoil, broken rock, dry			
		SP: Wet, sand		Sampled 3-4'	6.8 ppm
-5		SW: Moist, sand/silt, trace gravel			
-10		SP: Sand, trace gravel			
		SW: Wet, sand/silt, trace gravel			
		GM: Moist, gravel and sand			
-15		SP: Moist, sand			
		SW: Moist, sand/silt			
		SP: Wet, sand			
-20		GM: Wet/saturated, interlayered sand with gravel		Sampled 19-20'	3.3 ppm

PVE Sheffler
One Civic Center Plaza
Suite 501
Poughkeepsie, New York
(845) 454-2544

SOIL BORING LOG

BOREHOLE NO.: **CW-3**

TOTAL DEPTH: **24'**

PROJECT INFORMATION		DRILLING INFORMATION	
PROJECT #:	**560909**	DRILLING CO.:	**HES**
SITE LOCATION:	**Hudson River Psych Center North**	RIG TYPE:	**Geoprobe**
LOGGED BY:	**Stephanie Lewison**	METHOD OF DRILLING:	**Direct Push**
PROJECT MANAGER:	**Christopher Brown**	SAMPLING METHODS:	**4' Macro Core**
DATES DRILLED:	**5-12-14**	HAMMER WT./DROP	**N/A**
		DEPTH TO WATER	**19.75'**

NOTES:
Sunny, 75F.

▽ Water level during drilling

DEPTH	SOIL SYMBOLS	SOIL DESCRIPTION		Sample Depth	PID (ppm)
0		TOPSOIL: Topsoil			
		COAL: Coal fragments			
		SW: Wet, sand/silt			
-5		SP: Wet/nearly saturated, sand grading to clay with depth		Sampled 4-5.5'	6.0 ppm
		SW: Wet/nearly saturated, sand/silt			
-10		GM: Wet, gravel with sand. (2' recovery in 8-12' interval.)			
		GM: Moist, gravel			
-15		GM: Wet, gravel			
-20		GM: Saturated, gravel	▽		
		GM: Wet, gravel (possible cave-in)			
		GM: Saturated, gravel		Sampled 23-24'	3.8 ppm

SOIL BORING LOG

PVE Sheffler

One Civic Center Plaza
Suite 501
Poughkeepsie, New York
(845) 454-2544

BOREHOLE NO.: **CW-4**

TOTAL DEPTH: **20'**

PROJECT INFORMATION		DRILLING INFORMATION	
PROJECT #:	**560909**	DRILLING CO.:	**HES**
SITE LOCATION:	**HRPC**	RIG TYPE:	**Geoprobe**
LOGGED BY:	**Conor Tarbell**	METHOD OF DRILLING:	**Direct Push**
PROJECT MANAGER:	**Christopher Brown**	SAMPLING METHODS:	**4' Macro Core**
DATES DRILLED:	**5/13/2014**	HAMMER WT./DROP	**N/A**
		DEPTH TO WATER	**14'**

NOTES:
75 degrees F

Water level during drilling

DEPTH	SOIL SYMBOLS	SOIL DESCRIPTION		Sample Depth	PID (ppm)
0		SW: Gray, brown, light brown sand, little gravel, trace to little silt and dry clay		Sampled from between 2-4'	4.4
-5		SP: Brown/gray sand, little gravel, trace silt			
-10					
-15				Sampled from between 15-16'	3.3
-20					

PVE Sheffler

One Civic Center Plaza
Suite 501
Poughkeepsie, New York
(845) 454-2544

SOIL BORING LOG

BOREHOLE NO.: **CW-5**

TOTAL DEPTH: **20'**

PROJECT INFORMATION		DRILLING INFORMATION	
PROJECT #:	**560909**	DRILLING CO.:	**HES**
SITE LOCATION:	**HRPC**	RIG TYPE:	**Geoprobe**
LOGGED BY:	**Conor Tarbell**	METHOD OF DRILLING:	**Direct Push**
PROJECT MANAGER:	**Christopher Brown**	SAMPLING METHODS:	**4' Macro Core**
DATES DRILLED:	**5/13/2014**	HAMMER WT./DROP	**N/A**
		DEPTH TO WATER	**Not Established**

NOTES:
75 degrees F

Water level during drilling

DEPTH	SOIL SYMBOLS	SOIL DESCRIPTION	Sample Depth	PID (ppm)
0		SP: Fill; gray sand; little to some gravel; little silt and clay; dry		
		SP: Brown sand; some gravel; little silt and clay; dry to moist	Sampled from between 2-4.5'	1.8
-5				
-10				
-15			Sampled from between 15-16'	2.2
-20				

PVE Sheffler
One Civic Center Plaza
Suite 501
Poughkeepsie, New York
(845) 454-2544

SOIL BORING LOG

BOREHOLE NO.: **CW-6**

TOTAL DEPTH: **20'**

PROJECT INFORMATION		DRILLING INFORMATION	
PROJECT #:	**560909**	DRILLING CO.:	**HES**
SITE LOCATION:	**HRPC**	RIG TYPE:	**Geoprobe**
LOGGED BY:	**Conor Tarbell**	METHOD OF DRILLING:	**Direct Push**
PROJECT MANAGER:	**Christopher Brown**	SAMPLING METHODS:	**4' Macro Core**
DATES DRILLED:	**5/13/2014**	HAMMER WT./DROP	**N/A**
		DEPTH TO WATER	**Not Established**

NOTES:
75 degrees F

Water level during drilling

DEPTH	SOIL SYMBOLS	SOIL DESCRIPTION	Sample Depth	PID (ppm)
0		SW: Fill; brown sand; well graded; trace gravel		
		COAL: Coal ash	Sampled from between 3-4.5'	4.8
-5		SC: Brown sand; clayey silt		
		SP: Brown sand; some gravel; poorly graded	Sampled from between 7-8'	4.0
-10				
		SW: Brown sand; well graded; little to some gravel		
-15				
-20				

SOIL BORING LOG

PVE Sheffler

One Civic Center Plaza
Suite 501
Poughkeepsie, New York
(845) 454-2544

BOREHOLE NO.: **FD-1**

TOTAL DEPTH: **18'**

PROJECT INFORMATION		DRILLING INFORMATION	
PROJECT #:	**560909**	DRILLING CO.:	**GeoLogic**
SITE LOCATION:	**HRPC**	RIG TYPE:	**Geoprobe 6620**
LOGGED BY:	**Conor Tarbell**	METHOD OF DRILLING:	**Direct Push**
PROJECT MANAGER:	**Christopher Brown**	SAMPLING METHODS:	**4' Macro Core**
DATES DRILLED:	**7/16/2014**	HAMMER WT./DROP	**N/A**
		DEPTH TO WATER	**N/A**

NOTES:
Refusal at 18' and 14'

Water level during drilling

DEPTH	SOIL SYMBOLS	SOIL DESCRIPTION	Sample Depth	PID (ppm)
0		SP: Brown sand (f); some gravel	Sampled 1-3'	0.8
		COAL: Yellow/light brown sand (m-f); some gravel and silt		
		COAL: Coal and coal ash		
-5		SP: Light brown sand (c-f); some gravel; trace silt		
-10		Pushed rock from 9-12'		
-15		SP: Brown sand (c-f); some gravel; trace silt	Sampled 14-16'	0.5

PVE Sheffler
One Civic Center Plaza
Suite 501
Poughkeepsie, New York
(845) 454-2544

SOIL BORING LOG

BOREHOLE NO.: **FD-2**

TOTAL DEPTH: **20'**

PROJECT INFORMATION		DRILLING INFORMATION	
PROJECT #:	**560909**	DRILLING CO.:	**GeoLogic**
SITE LOCATION:	**HRPC**	RIG TYPE:	**Geoprobe 6620**
LOGGED BY:	**Conor Tarbell**	METHOD OF DRILLING:	**Direct Push**
PROJECT MANAGER:	**Christopher Brown**	SAMPLING METHODS:	**4' Macro Core**
DATES DRILLED:	**7/16/2014**	HAMMER WT./DROP	**N/A**
		DEPTH TO WATER	**N/A**

NOTES:

Water level during drilling

DEPTH	SOIL SYMBOLS	SOIL DESCRIPTION	Sample Depth	PID (ppm)
0		SP: Brown sand (f); some gravel and crushed shale	Sampled 1-3'	0.6
		COAL: Coal and coal ash		
-5		ML: Light brown/yellow sandy silt; some clay; gravel		
		SP: Light brown sand (c-f); some silt and gravel		
		ML: Light brown/yellow sandy silt; some clay and gravel		
-10		SP: Light brown/grey sand (c-f); some gravel; trace silt		
-15			Sampled 13.5-16'	0.2
-20				

PVE Sheffler
One Civic Center Plaza
Suite 501
Poughkeepsie, New York
(845) 454-2544

SOIL BORING LOG

BOREHOLE NO.: **FD-3**

TOTAL DEPTH: **20'**

PROJECT INFORMATION		DRILLING INFORMATION	
PROJECT #:	**560909**	DRILLING CO.:	**GeoLogic**
SITE LOCATION:	**HRPC**	RIG TYPE:	**Geoprobe 6620**
LOGGED BY:	**Conor Tarbell**	METHOD OF DRILLING:	**Direct Push**
PROJECT MANAGER:	**Christopher Brown**	SAMPLING METHODS:	**4' Macro Core**
DATES DRILLED:	**7/16/2014**	HAMMER WT./DROP	**N/A**
		DEPTH TO WATER	**N/A**

NOTES:

Water level during drilling

DEPTH	SOIL SYMBOLS	SOIL DESCRIPTION	Sample Depth	PID (ppm)
0		TOPSOIL: Organic Layer		
		SP: Dark brown silty sand; some gravel and clay; very slight indescriminate odor @ 1-2'	Sampled 1-3'	0.3
-5		CL: Yellow/light brown silty clay		
		ML: Light brown sandy silt; some gravel; trace clay	Sampled 7-9'	0.4
-10		SP: Light brown sand (m-vf); some gravel and silt		
-15				
		SP: Brown sand (m-f); some crushed shale/gravel		
-20				

PVE Sheffler
One Civic Center Plaza
Suite 501
Poughkeepsie, New York
(845) 454-2544

SOIL BORING LOG

BOREHOLE NO.: **FD-4**

TOTAL DEPTH: **12'**

PROJECT INFORMATION		DRILLING INFORMATION	
PROJECT #:	**560909**	DRILLING CO.:	**GeoLogic**
SITE LOCATION:	**HRPC**	RIG TYPE:	**Geoprobe 6620**
LOGGED BY:	**Conor Tarbell**	METHOD OF DRILLING:	**Direct Push**
PROJECT MANAGER:	**Christopher Brown**	SAMPLING METHODS:	**4' Macro Core**
DATES DRILLED:	**7/21/2014**	HAMMER WT./DROP	**N/A**
		DEPTH TO WATER	**N/A**

NOTES:

Water level during drilling

DEPTH	SOIL SYMBOLS	SOIL DESCRIPTION	Sample Depth	PID (ppm)
0		SM: Fill; black sand; little silt and clay; little gravel; dry; coal fragments		
		SM: Glacial till; fill; light brown sand; some silt and clay; some gravel; moist	Sampled 3-5'	0.0
-5		SP: Brown/grey sand, trace to little silt and clay; little gravel, dry		
			Sampled 8-9'	0.0
-10				

PVE Sheffler
One Civic Center Plaza
Suite 501
Poughkeepsie, New York
(845) 454-2544

SOIL BORING LOG

BOREHOLE NO.: **FS-1**

TOTAL DEPTH: **24'**

PROJECT INFORMATION		DRILLING INFORMATION	
PROJECT #:	**560909**	DRILLING CO.:	**HES**
SITE LOCATION:	**HRPC**	RIG TYPE:	**Geoprobe**
LOGGED BY:	**Conor Tarbell**	METHOD OF DRILLING:	**Direct Push**
PROJECT MANAGER:	**Christopher Brown**	SAMPLING METHODS:	**4' Macro Core**
DATES DRILLED:	**5/15/2014**	HAMMER WT./DROP	**N/A**
		DEPTH TO WATER	**Not Established**

NOTES:
65 degrees Heavy Rain

Water level during drilling

DEPTH	SOIL SYMBOLS	SOIL DESCRIPTION	Sample Depth	PID (ppm)
0		ASPHALT: Asphalt		
		SW: Brown sand; little to some gravel; little silt and clay		
		COAL: Coal Ash	Sampled from between 2-4'	1.2
-5		SP: Brown sand; little to some gravel; little silt and clay		
-10				
-15		SW: Brown sand; trace to little silt and clay		
-20			Sampled from between 19-20'	1.2

PVE Sheffler
One Civic Center Plaza
Suite 501
Poughkeepsie, New York
(845) 454-2544

SOIL BORING LOG

BOREHOLE NO.: **FS-2**

TOTAL DEPTH: **20'**

PROJECT INFORMATION		DRILLING INFORMATION	
PROJECT #:	**560909**	DRILLING CO.:	**HES**
SITE LOCATION:	**HRPC**	RIG TYPE:	**Geoprobe**
LOGGED BY:	**Conor Tarbell**	METHOD OF DRILLING:	**Direct Push**
PROJECT MANAGER:	**Christopher Brown**	SAMPLING METHODS:	**4' Macro Core**
DATES DRILLED:	**5/15/2014**	HAMMER WT./DROP	**N/A**
		DEPTH TO WATER	**Not Established**

NOTES:
65 degrees Overcast

Water level during drilling

DEPTH	SOIL SYMBOLS	SOIL DESCRIPTION	Sample Depth	PID (ppm)
0		SM: Fill; brown sand and silt and clay; little gravel		
		SP: Brown sand; little to some gravel; little to some silt and clay	Sampled from between 2-3'	1.2
-5		COAL: Coal Ash		
		SP: Glacial till; brown sand; some gravel; little silt and clay	Sampled from between 6.5-8'	0.6
-10				
-15		SW: Glacial till; brown sand; little to some gravel; trace to little silt and clay		
-20				

PVE Sheffler

48 Springside Avenue
Poughkeepsie, New York
(845) 454-2544

SOIL BORING LOG

BOREHOLE NO.: **FS-3**

TOTAL DEPTH: **4.5**

PROJECT INFORMATION		DRILLING INFORMATION	
PROJECT #:	**560909**	DRILLING CO.:	**HES**
SITE LOCATION:	**HRPC**	RIG TYPE:	**Geoprobe**
LOGGED BY:	**Conor Tarbell**	METHOD OF DRILLING:	**Direct Push**
PROJECT MANAGER:	**Christopher Brown**	SAMPLING METHODS:	**4' Macro Core**
DATES DRILLED:	**5/15/2014**	HAMMER WT./DROP	**N/A**
		DEPTH TO WATER	**Not Established**

NOTES:
65 degrees Rain

Water level during drilling

DEPTH (FT)	SOIL SYMBOLS	SOIL DESCRIPTION	Sample Depth	PID (ppm)
00		ASPHALT: Asphalt		
		SP: Brown sand; little to some gravel; little silt and clay		
		SP: Black sand; little gravel; little silt and clay	Sampled from between 1.5-3'	0.5
		GRAVEL: Gravel and cobbles		
		GRAVEL: Gravel and cobbles		

PVE Sheffler

48 Springside Avenue
Poughkeepsie, New York
(845) 454-2544

SOIL BORING LOG

BOREHOLE NO.: **MNTC-1**

TOTAL DEPTH: **20.5'**

PROJECT INFORMATION		DRILLING INFORMATION	
PROJECT #:	**560909**	DRILLING CO.:	**GeoLogic**
SITE LOCATION:	**HRPC**	RIG TYPE:	**2' Split Spoon**
LOGGED BY:	**Conor Tarbell**	METHOD OF DRILLING:	**Auger to HSA**
PROJECT MANAGER:	**Christopher Brown**	SAMPLING METHODS:	**2' Split Spoon**
DATES DRILLED:	**12/16/14**	HAMMER WT./DROP	**N/A**
		DEPTH TO WATER	**19'**

NOTES:

▽ Water level during drilling

DEPTH (FT)	SOIL SYMBOLS	SOIL DESCRIPTION		Sample Depth	PID (ppm)
00		SC: Gray sand; little to some silt & clay, little to some gravel.			
		SC: Tan brown sand; little silt and clay; little gravel			
		FILL: White fire brick			
		FILL: Brick			
10		SC: Brown sand; little to some silt and clay; trace gravel			
		SC: Light brown sand; some silt and clay; little gravel			
20		SC: Brown sand; little silt and clay; trace to little gravel; saturated at 19'	▽	Sampled from 18-20.5'	0.0

PVE Sheffler

48 Springside Avenue
Poughkeepsie, New York
(845) 454-2544

SOIL BORING LOG

BOREHOLE NO.: **MNTC-2**

TOTAL DEPTH: **20'**

PROJECT INFORMATION		DRILLING INFORMATION	
PROJECT #:	**560909**	DRILLING CO.:	**GeoLogic**
SITE LOCATION:	**HRPC**	RIG TYPE:	**2' Split Spoon**
LOGGED BY:	**Conor Tarbell**	METHOD OF DRILLING:	**Auger to HSA**
PROJECT MANAGER:	**Christopher Brown**	SAMPLING METHODS:	**2' Split Spoon**
DATES DRILLED:	**12/18/14**	HAMMER WT./DROP	**N/A**
		DEPTH TO WATER	**NA**

NOTES:

Water level during drilling

DEPTH (FT)	SOIL SYMBOLS	SOIL DESCRIPTION	Sample Depth	PID (ppm)
00		SC: asphalt; brown sand (m-f); trace silt		
		SC: Medium brown sand (m-f); trace silt; brick fragments		
		SHATTERED: Crushed rock with 2" of recovery		
		SC: Medium brown sand; trace to little silt; little gravel		
10				
			Sampled from 16-18'	0.0
20				

PVE Sheffler

48 Springside Avenue
Poughkeepsie, New York
(845) 454-2544

SOIL BORING LOG

BOREHOLE NO.: **MNTC-3**

TOTAL DEPTH: **10.5'**

PROJECT INFORMATION		DRILLING INFORMATION	
PROJECT #:	**560909**	DRILLING CO.:	**GeoLogic**
SITE LOCATION:	**HRPC**	RIG TYPE:	**2' Split Spoon**
LOGGED BY:	**Conor Tarbell**	METHOD OF DRILLING:	**Auger to HSA**
PROJECT MANAGER:	**Christopher Brown**	SAMPLING METHODS:	**2' Split Spoon**
DATES DRILLED:	**12/17/14**	HAMMER WT./DROP	**N/A**
		DEPTH TO WATER	**NA**

NOTES:

Water level during drilling

DEPTH (FT)	SOIL SYMBOLS	SOIL DESCRIPTION	Sample Depth	PID (ppm)
00		SC: Brown/grey sand (m-c); trace silt; crushed stone		
		SC: Medium brown sand (m-c); trace silt; crushed rock throughout		
		SP: Poorly graded sand; no fines	Sampled from 8-10'	0.0
10		SC: Medium brown/gray sand (m); and gravel; trace silt; refusal at 10.5'		

PVE Sheffler

48 Springside Avenue
Poughkeepsie, New York
(845) 454-2544

SOIL BORING LOG

BOREHOLE NO.: **MNTC-4**

TOTAL DEPTH: **23'**

PROJECT INFORMATION		DRILLING INFORMATION	
PROJECT #:	**560909**	DRILLING CO.:	**GeoLogic**
SITE LOCATION:	**HRPC**	RIG TYPE:	**2' Split Spoon**
LOGGED BY:	**Conor Tarbell**	METHOD OF DRILLING:	**Auger to HSA**
PROJECT MANAGER:	**Christopher Brown**	SAMPLING METHODS:	**2' Split Spoon**
DATES DRILLED:	**12/15/14**	HAMMER WT./DROP	**N/A**
		DEPTH TO WATER	**NA**

NOTES:

Water level during drilling

DEPTH (FT)	SOIL SYMBOLS	SOIL DESCRIPTION	Sample Depth	PID (ppm)
00		SC: Brown sand; some to and silt and clay; little gravel	Sampled from 0-2"	0.0
			Sampled from 2-24"	0.0
10			Sampled from 10-12'	0.0
		SC: Brown sand; little to trace silt and clay; little gravel		
		SC: Brown sand; trace silt and clay		
		No recovery		
20		SC: Brown/gray sand; crushed stone; trace silt; some gravel		

PVE Sheffler

48 Springside Avenue
Poughkeepsie, New York
(845) 454-2544

SOIL BORING LOG

BOREHOLE NO.: **MRT-1**

TOTAL DEPTH: **19.5'**

PROJECT INFORMATION		DRILLING INFORMATION	
PROJECT #:	**560909**	DRILLING CO.:	**GeoLogic**
SITE LOCATION:	**HRPC**	RIG TYPE:	**2' Split Spoon**
LOGGED BY:	**Conor Tarbell**	METHOD OF DRILLING:	**Auger to HSA**
PROJECT MANAGER:	**Christopher Brown**	SAMPLING METHODS:	**2' Split Spoon**
DATES DRILLED:	**12/17/14**	HAMMER WT./DROP	**N/A**
		DEPTH TO WATER	**NA**

NOTES:
Refusal at 19.5' on multiple attempts.

Water level during drilling

DEPTH (FT)	SOIL SYMBOLS	SOIL DESCRIPTION	Sample Depth	PID (ppm)
00		SM: Organic topsoil; coal fragments; brown/gray sand and gravel; brick fragments; and coal ash		
		SM: Brown/gray sand; trace silt; coal/brick throughout		
		SM: Gray sand; trace silt; coal/coal ash throughout		
		ML: Brown sand and silty clay; little gravel	Sampled from 5.5-7'	0.0
		SM: Brown sand and broken rock; coal		
10		No recovery		
		SW: Brown/gray sand (m-c) and gravel (f); coal fragments throughout (possibly due to sloughing); moist		

PVE Sheffler

48 Springside Avenue
Poughkeepsie, New York
(845) 454-2544

SOIL BORING LOG

BOREHOLE NO.: **MRT-2**

TOTAL DEPTH: **32'**

PROJECT INFORMATION		DRILLING INFORMATION	
PROJECT #:	**560909**	DRILLING CO.:	**GeoLogic**
SITE LOCATION:	**HRPC**	RIG TYPE:	**2' Split Spoon**
LOGGED BY:	**Conor Tarbell**	METHOD OF DRILLING:	**Auger to HSA**
PROJECT MANAGER:	**Christopher Brown**	SAMPLING METHODS:	**2' Split Spoon**
DATES DRILLED:	**12/16/14 - 12/17/14**	HAMMER WT./DROP	**N/A**
		DEPTH TO WATER	**24'**

NOTES:

▽ Water level during drilling

DEPTH (FT)	SOIL SYMBOLS	SOIL DESCRIPTION	Sample Depth	PID (ppm)
00		SC: Brown sand; little to some silt & clay; trace gravel; vegetation		
		COAL: Coal Ash		
		SM: Brown sand; some to and silty clay; little gravel		
10				
20			Sampled from 18-20'	0.0
		SC: Brown sand; some fine gravel; trace fines; saturated		
30		SHALE: Weathered Shale		

SOIL BORING LOG

PVE Sheffler
One Civic Center Plaza
Suite 501
Poughkeepsie, New York
(845) 454-2544

BOREHOLE NO.: **PH-1**

TOTAL DEPTH: **3.25'**

PROJECT INFORMATION		DRILLING INFORMATION	
PROJECT #:	**560909**	DRILLING CO.:	**HES**
SITE LOCATION:	**HRPC**	RIG TYPE:	**Geoprobe**
LOGGED BY:	**Conor Tarbell**	METHOD OF DRILLING:	**Direct Push**
PROJECT MANAGER:	**Christopher Brown**	SAMPLING METHODS:	**4' Macro Core**
DATES DRILLED:	**5/7/2014**	HAMMER WT./DROP	**N/A**
		DEPTH TO WATER	**Not Established**
NOTES:		▽	Water level during drilling

DEPTH	SOIL SYMBOLS	SOIL DESCRIPTION	Sample Depth	PID (ppm)
0		SM: Gray sand and clayey silt; gravel		
			Sampled from between 1-2'	0.7
			Sampled from between 2-3'	0.0

PVE Sheffler
One Civic Center Plaza
Suite 501
Poughkeepsie, New York
(845) 454-2544

SOIL BORING LOG

BOREHOLE NO.: **PH-2**

TOTAL DEPTH: **9'**

PROJECT INFORMATION		DRILLING INFORMATION	
PROJECT #:	**560909**	DRILLING CO.:	**HES**
SITE LOCATION:	**HRPC**	RIG TYPE:	**Geoprobe**
LOGGED BY:	**Conor Tarbell**	METHOD OF DRILLING:	**Direct Push**
PROJECT MANAGER:	**Christopher Brown**	SAMPLING METHODS:	**4' Macro Core**
DATES DRILLED:	**5/7/2014**	HAMMER WT./DROP	**N/A**
		DEPTH TO WATER	**8'**

NOTES:

▽ Water level during drilling

DEPTH	SOIL SYMBOLS	SOIL DESCRIPTION		Sample Depth	PID (ppm)
0		SM: Brown sand and clayey silt; some gravel			
		SP: Gray/Brown sand; little clayey silt; some gravel		Sampled from between 1-2'	0.0
-5		SM: Brown/gray sand and clayey silt and gravel			
		SP: Gray fine sand and silt; with gravel; petroleum odor; black stained; oily	▽	Sampled from between 7-9'	9.8

SOIL BORING LOG

PVE Sheffler

One Civic Center Plaza
Suite 501
Poughkeepsie, New York
(845) 454-2544

BOREHOLE NO.: **PH-3**

TOTAL DEPTH: **8.5'**

PROJECT INFORMATION		DRILLING INFORMATION	
PROJECT #:	**560909**	DRILLING CO.:	**HES**
SITE LOCATION:	**HRPC**	RIG TYPE:	**Geoprobe**
LOGGED BY:	**Conor Tarbell**	METHOD OF DRILLING:	**Direct Push**
PROJECT MANAGER:	**Christopher Brown**	SAMPLING METHODS:	**4' Macro Core**
DATES DRILLED:	**5/8/2014**	HAMMER WT./DROP	**N/A**
		DEPTH TO WATER	**Not Established**
NOTES:		▽	Water level during drilling

DEPTH	SOIL SYMBOLS	SOIL DESCRIPTION	Sample Depth	PID (ppm)
0		SM: Gray/brown sand anbd clayey silt; little to some gravel; occasional cobbles; slag; coal; brick encountered		
			Sampled from between 1-2'	0.0
			Sampled from between 2-3'	0.0
-5				

PVE Sheffler

One Civic Center Plaza
Suite 501
Poughkeepsie, New York
(845) 454-2544

SOIL BORING LOG

BOREHOLE NO.: **PH-4**

TOTAL DEPTH: **12.5'**

PROJECT INFORMATION		DRILLING INFORMATION	
PROJECT #:	**560909**	DRILLING CO.:	**HES**
SITE LOCATION:	**HRPC**	RIG TYPE:	**Geoprobe**
LOGGED BY:	**Conor Tarbell**	METHOD OF DRILLING:	**Direct Push**
PROJECT MANAGER:	**Christopher Brown**	SAMPLING METHODS:	**4' Macro Core**
DATES DRILLED:	**5/8/2014**	HAMMER WT./DROP	**N/A**
		DEPTH TO WATER	**11'**

NOTES:
50 degrees Overcast

▽ Water level during drilling

DEPTH	SOIL SYMBOLS	SOIL DESCRIPTION		Sample Depth	PID (ppm)
0		SM: Gray/brown sand; some clayey silt; some to little gravel		Sampled from between 1-2'	0.0
-5					
-10		SM: Gray/brown sand; some clayey silt; some to little gravel; petroleum odor; some free product visible floating on top of water in sleeve	▽	Sampled from between 11-12'	49.1

PVE Sheffler

One Civic Center Plaza
Suite 501
Poughkeepsie, New York
(845) 454-2544

SOIL BORING LOG

BOREHOLE NO.: **PH-5**

TOTAL DEPTH: **11.5'**

PROJECT INFORMATION		DRILLING INFORMATION	
PROJECT #:	**560909**	DRILLING CO.:	**HES**
SITE LOCATION:	**HRPC**	RIG TYPE:	**Geoprobe**
LOGGED BY:	**Conor Tarbell**	METHOD OF DRILLING:	**Direct Push**
PROJECT MANAGER:	**Christopher Brown**	SAMPLING METHODS:	**4' Macro Core**
DATES DRILLED:	**5/8/2014**	HAMMER WT./DROP	**N/A**
		DEPTH TO WATER	**Not Established**

NOTES:
50 degrees Overcast

Water level during drilling

DEPTH	SOIL SYMBOLS	SOIL DESCRIPTION	Sample Depth	PID (ppm)
0		SM: Gray/brown sand; some clayey silt; some to little gravel; poorly sorted	Sampled from between 1-2'	0.0
-5			Sampled from between 6-7'	0.0
-10		ML: Light brown clayey sillt; little sand; trace gravel; low plasticity		

PVE Sheffler
One Civic Center Plaza
Suite 501
Poughkeepsie, New York
(845) 454-2544

SOIL BORING LOG

BOREHOLE NO.: **PH-6**

TOTAL DEPTH: **9'**

PROJECT INFORMATION		DRILLING INFORMATION	
PROJECT #:	**560909**	DRILLING CO.:	**HES**
SITE LOCATION:	**HRPC**	RIG TYPE:	**Geoprobe**
LOGGED BY:	**Conor Tarbell**	METHOD OF DRILLING:	**Direct Push**
PROJECT MANAGER:	**Christopher Brown**	SAMPLING METHODS:	**4' Macro Core**
DATES DRILLED:	**5/8/2014**	HAMMER WT./DROP	**N/A**
		DEPTH TO WATER	**4'**

NOTES:
50 degrees Overcast

Water level during drilling

DEPTH	SOIL SYMBOLS	SOIL DESCRIPTION		Sample Depth	PID (ppm)
0		TOPSOIL: Dark brown organic topsoil			
		SW: Brown sand; well graded; little to no fines; saturared at 4'		Sampled from between 1-2'	0.0
-5		SM: Light brown sand and clayey silt; some gravel; poorly graded		Sampled from between 4.5-5.5'	0.0

PVE Sheffler

One Civic Center Plaza
Suite 501
Poughkeepsie, New York
(845) 454-2544

SOIL BORING LOG

BOREHOLE NO.: **PH-7**

TOTAL DEPTH: **5'**

PROJECT INFORMATION		DRILLING INFORMATION	
PROJECT #:	**560909**	DRILLING CO.:	**GeoLogic**
SITE LOCATION:	**HRPC**	RIG TYPE:	**Geoprobe 6620**
LOGGED BY:	**Conor Tarbell**	METHOD OF DRILLING:	**Direct Push**
PROJECT MANAGER:	**Christopher Brown**	SAMPLING METHODS:	**4' Macro Core**
DATES DRILLED:	**7/17/2014**	HAMMER WT./DROP	**N/A**
		DEPTH TO WATER	**N/A**

NOTES:
Refusal at 5'

Water level during drilling

DEPTH	SOIL SYMBOLS	SOIL DESCRIPTION	Sample Depth	PID (ppm)
0		SW: Below concrete slab: sand and some gravel; dry; brown	Sampled 0-2"	0.4
			Sampled 12-24"	0.3
		GM: Gravel and some saturated sand; some odor: not necessarily petroleum	Sampled 4-4.75'	0.7
-5		SW: Sand and some gravel; dry to moist; brown		

PVE Sheffler
One Civic Center Plaza
Suite 501
Poughkeepsie, New York
(845) 454-2544

SOIL BORING LOG

BOREHOLE NO.: **PH-8**

TOTAL DEPTH: **3.5'**

PROJECT INFORMATION		DRILLING INFORMATION	
PROJECT #:	**560909**	DRILLING CO.:	**GeoLogic**
SITE LOCATION:	**HRPC**	RIG TYPE:	**Geoprobe 6620**
LOGGED BY:	**Conor Tarbell**	METHOD OF DRILLING:	**Direct Push**
PROJECT MANAGER:	**Christopher Brown**	SAMPLING METHODS:	**4' Macro Core**
DATES DRILLED:	**7/17/2014**	HAMMER WT./DROP	**N/A**
		DEPTH TO WATER	**N/A**

NOTES:
Refusal at 3.5' on all 3 attempts

Water level during drilling

DEPTH	SOIL SYMBOLS	SOIL DESCRIPTION	Sample Depth	PID (ppm)
0		SP: Brown sand (c-f) with gravel and crushed stone; trace silt	Sampled 0-2"	0.0
			Sampled 12-24"	0.3
		ML: Light brown sandy silt; some gravel and clay	Sampled 2.5-3.5'	0.0

PVE Sheffler

48 Springside Avenue
Poughkeepsie, New York
(845) 454-2544

SOIL BORING LOG

BOREHOLE NO.: **PH-9**

TOTAL DEPTH: **12'**

PROJECT INFORMATION		DRILLING INFORMATION	
PROJECT #:	**560909**	DRILLING CO.:	**HES**
SITE LOCATION:	**HRPC**	RIG TYPE:	**Geoprobe**
LOGGED BY:	**Conor Tarbell**	METHOD OF DRILLING:	**Direct Push**
PROJECT MANAGER:	**Christopher Brown**	SAMPLING METHODS:	**4' Macro Core**
DATES DRILLED:	**5/8/2014**	HAMMER WT./DROP	**N/A**
		DEPTH TO WATER	**7'**

NOTES:
50 degrees Overcast

Water level during drilling

DEPTH (FT)	SOIL SYMBOLS	SOIL DESCRIPTION		Sample Depth	PID (ppm)
00		TOPSOIL: Dark brown organic topsoil			
		GM: Gray gravel/crushed stone; little sand; little silt		Sampled from between 1-2'	0.0
		SP: Brown sand; some clayey silt; trace gravel; wet-saturated at 7'			
		SHATTERED: Shale		Sampled from between 7-9'	0.0
10		ML: Light brown silt and clay; trace fine sand			
		SW: Light brown sand; some gravel; trace silt			

SOIL BORING LOG

PVE Sheffler

One Civic Center Plaza
Suite 501
Poughkeepsie, New York
(845) 454-2544

BOREHOLE NO.: **PH-10**

TOTAL DEPTH: **15'**

PROJECT INFORMATION		DRILLING INFORMATION	
PROJECT #:	**560909**	DRILLING CO.:	**GeoLogic**
SITE LOCATION:	**HRPC**	RIG TYPE:	**Geoprobe 6620**
LOGGED BY:	**Alan Mason**	METHOD OF DRILLING:	**Direct Push**
PROJECT MANAGER:	**Christopher Brown**	SAMPLING METHODS:	**4' Macro Core**
DATES DRILLED:	**7/15/2014**	HAMMER WT./DROP	**N/A**
		DEPTH TO WATER	**N/A**

NOTES:

Water level during drilling

DEPTH	SOIL SYMBOLS	SOIL DESCRIPTION	Sample Depth	PID (ppm)
0		ML: light brown/grey sandy SILT some gravel/crushed shale, clay, coal	Sampled 0-2"	0.0
			Sampled 12-24"	0.0
-5				
-10				
		SP: light brown/grey SAND (f-vf) some gravel/crushed shale, coal		
		ML: light brown/grey sandy SILT some gravel, clay	Sampled 12.5-14'	0.0
-15				

PVE Sheffler
One Civic Center Plaza
Suite 501
Poughkeepsie, New York
(845) 454-2544

SOIL BORING LOG

BOREHOLE NO.: **PH-11**

TOTAL DEPTH: **10.75'**

PROJECT INFORMATION		DRILLING INFORMATION	
PROJECT #:	**560909**	DRILLING CO.:	**HES**
SITE LOCATION:	**Hudson River Psych Center North**	RIG TYPE:	**Geoprobe**
LOGGED BY:	**Stephanie Lewison**	METHOD OF DRILLING:	**Direct Push**
PROJECT MANAGER:	**Christopher Brown**	SAMPLING METHODS:	**4' Macro Core**
DATES DRILLED:	**5-12-14**	HAMMER WT./DROP	**N/A**
		DEPTH TO WATER	**7.5'**

NOTES:
Sunny, 70F.

▽ Water level during drilling

DEPTH	SOIL SYMBOLS	SOIL DESCRIPTION		Sample Depth	PID (ppm)
0		FILL: Fill (slag, rock), wetter with depth. (Only 1.5' recovery in 0-4' interval.)		Sampled 0-2"	
				Sampled 1-2'	0.0 ppm
-5		FILL: Wet, fill/coal, gravel and sand. Piece of wood at 6' with creosote odor. (Only 2' recovery in 4-8' interval.)			
		GM: Saturated gravel.	▽		
-10		GM: Saturated gravel with strong (#6 oil?) petroleum odor, trace free product. Refusal at 10.75' on rock.		Sampled 9-10.75'	15 ppm

SOIL BORING LOG

PVE Sheffler

One Civic Center Plaza
Suite 501
Poughkeepsie, New York
(845) 454-2544

BOREHOLE NO.: **PH-12**

TOTAL DEPTH: **12'**

PROJECT INFORMATION		DRILLING INFORMATION	
PROJECT #:	**560909**	DRILLING CO.:	**HES**
SITE LOCATION:	**Hudson River Psych Center North**	RIG TYPE:	**Geoprobe**
LOGGED BY:	**Stephanie Lewison**	METHOD OF DRILLING:	**Direct Push**
PROJECT MANAGER:	**Christopher Brown**	SAMPLING METHODS:	**4' Macro Core**
DATES DRILLED:	**5-12-14**	HAMMER WT./DROP	**N/A**
		DEPTH TO WATER	**NE**

NOTES:
Sunny, 70F. Boring located ~15' higher elevation than other "PH" borings.

Water level during drilling

DEPTH	SOIL SYMBOLS	SOIL DESCRIPTION		Sample Depth	PID (ppm)
0		SW: Dry, coal, sand		Sampled 0-2"	
		GM: Dry, gravel and broken rock. Trace sand. Geoprobe refusal at 12' due to large amount of gravel in macrocore.		Sampled 1-2'	3.3 ppm
-5					
-10					

PVE Sheffler
One Civic Center Plaza
Suite 501
Poughkeepsie, New York
(845) 454-2544

SOIL BORING LOG

BOREHOLE NO.: **PH-13**

TOTAL DEPTH: **9.25'**

PROJECT INFORMATION		DRILLING INFORMATION	
PROJECT #:	**560909**	DRILLING CO.:	**HES**
SITE LOCATION:	**Hudson River Psych Center North**	RIG TYPE:	**Geoprobe**
LOGGED BY:	**Stephanie Lewison**	METHOD OF DRILLING:	**Direct Push**
PROJECT MANAGER:	**Christopher Brown**	SAMPLING METHODS:	**4' Macro Core**
DATES DRILLED:	**5-12-14**	HAMMER WT./DROP	**N/A**
		DEPTH TO WATER	**7.5'**

NOTES:
Sunny, 70F

Water level during drilling

DEPTH	SOIL SYMBOLS	SOIL DESCRIPTION	Sample Depth	PID (ppm)
0		SW: Dry, sand, trace gravel. Horizons of some coal at 3', 4' and 5'. Wood at 7.5'.		
-5		GM: Saturated, broken rock/gravel, some sand.		
		SW: Dry/moist, sand, some gravel. Refusal on concrete/rock.		

SOIL BORING LOG

PVE Sheffler

One Civic Center Plaza
Suite 501
Poughkeepsie, New York
(845) 454-2544

BOREHOLE NO.: **PH-14**

TOTAL DEPTH: **11'**

PROJECT INFORMATION		DRILLING INFORMATION	
PROJECT #:	**560909**	DRILLING CO.:	**GeoLogic**
SITE LOCATION:	**HRPC**	RIG TYPE:	**Geoprobe 6620**
LOGGED BY:	**Alan Mason**	METHOD OF DRILLING:	**Direct Push**
PROJECT MANAGER:	**Christopher Brown**	SAMPLING METHODS:	**4' Macro Core**
DATES DRILLED:	**7/15/2014**	HAMMER WT./DROP	**N/A**
		DEPTH TO WATER	**N/A**

NOTES:
Refusal at 11', 8' and 10'.

Water level during drilling

DEPTH	SOIL SYMBOLS	SOIL DESCRIPTION	Sample Depth	PID (ppm)
0		SM: light brown/grey silty SAND some gravel/crushed shale, coal trace clay	Sampled 0-2"	0.0
			Sampled 12-24"	0.0
-5				
-10		SP: light brown/grey SAND (f-vf) some gravel/crushed shale, coal, silt	Sampled 9-11'	0.0

PVE Sheffler
One Civic Center Plaza
Suite 501
Poughkeepsie, New York
(845) 454-2544

SOIL BORING LOG

BOREHOLE NO.: **PH-15**

TOTAL DEPTH: **16.5'**

PROJECT INFORMATION		DRILLING INFORMATION	
PROJECT #:	**560909**	DRILLING CO.:	**GeoLogic**
SITE LOCATION:	**HRPC**	RIG TYPE:	**Geoprobe 6620**
LOGGED BY:	**Alan Mason**	METHOD OF DRILLING:	**Direct Push**
PROJECT MANAGER:	**Christopher Brown**	SAMPLING METHODS:	**4' Macro Core**
DATES DRILLED:	**7/15/2014**	HAMMER WT./DROP	**N/A**
		DEPTH TO WATER	**N/A**

NOTES:
Refusal at 16.5' and 16.5'.

Water level during drilling

DEPTH	SOIL SYMBOLS	SOIL DESCRIPTION	Sample Depth	PID (ppm)
0		SP: light brown/grey SAND (f-vf) some coal, gravel/crushed shale trace silt	Sampled 0-2"	0.0
			Sampled 12-24"	0.0
-5				
		ML: light brown/yellow/grey sandy SILT some clay, gravel trace coal		
-10		SM: grey/light brown silty SAND and CRUSHED SHALE some gravel	Sampled 10-12'	0.0
		ML: light brown/yellow clayey SILT some fine sand, gravel		
-15				

PVE Sheffler

One Civic Center Plaza
Suite 501
Poughkeepsie, New York
(845) 454-2544

SOIL BORING LOG

BOREHOLE NO.: **PH-16**

TOTAL DEPTH: **17.5'**

PROJECT INFORMATION		DRILLING INFORMATION	
PROJECT #:	**560909**	DRILLING CO.:	**GeoLogic**
SITE LOCATION:	**HRPC**	RIG TYPE:	**Geoprobe 6620**
LOGGED BY:	**Alan Mason**	METHOD OF DRILLING:	**Direct Push**
PROJECT MANAGER:	**Christopher Brown**	SAMPLING METHODS:	**4' Macro Core**
DATES DRILLED:	**7/16/2014**	HAMMER WT./DROP	**N/A**
		DEPTH TO WATER	**N/A**

NOTES:
Refusal at 16.5' and 17.5'.

Water level during drilling

DEPTH	SOIL SYMBOLS	SOIL DESCRIPTION	Sample Depth	PID (ppm)
0		SP: light brown SAND (f-vf) some silt, gravel/crushed shale, coal	Sampled 0-2" Sampled 12-24"	0.0 0.4
-5		SP: brown/black SAND (m-f) and GRAVEL/CRUSHED SHALE some coal		
-10		SP: yellow/light brown SAND (f-vf) some gravel/crushed shale, silt, coal	Sampled 12-13'	0.3
-15		SM: light brown/grey silty SAND some gravel, clay		

PVE Sheffler
One Civic Center Plaza
Suite 501
Poughkeepsie, New York
(845) 454-2544

SOIL BORING LOG

BOREHOLE NO.: **PH-17**

TOTAL DEPTH: **4.5'**

PROJECT INFORMATION		DRILLING INFORMATION	
PROJECT #:	**560909**	DRILLING CO.:	**GeoLogic**
SITE LOCATION:	**HRPC**	RIG TYPE:	**Geoprobe 6620**
LOGGED BY:	**Conor Tarbell**	METHOD OF DRILLING:	**Direct Push**
PROJECT MANAGER:	**Christopher Brown**	SAMPLING METHODS:	**4' Macro Core**
DATES DRILLED:	**7/16/2014**	HAMMER WT./DROP	**N/A**
		DEPTH TO WATER	**N/A**

NOTES:
Refusal at 4.5' and 4.5'

Water level during drilling

DEPTH	SOIL SYMBOLS	SOIL DESCRIPTION		Sample Depth	PID (ppm)
0		SM: Brown silty sand; some coal and gravel; trace clay		Sampled 0-2"	0.4
				Sampled 12-24"	0.3
				Sampled 2-4'	0.8

PVE Sheffler
One Civic Center Plaza
Suite 501
Poughkeepsie, New York
(845) 454-2544

SOIL BORING LOG

BOREHOLE NO.: **PH-18**

TOTAL DEPTH: **10.5'**

PROJECT INFORMATION		DRILLING INFORMATION	
PROJECT #:	**560909**	DRILLING CO.:	**GeoLogic**
SITE LOCATION:	**HRPC**	RIG TYPE:	**Geoprobe 6620**
LOGGED BY:	**Conor Tarbell**	METHOD OF DRILLING:	**Direct Push**
PROJECT MANAGER:	**Christopher Brown**	SAMPLING METHODS:	**4' Macro Core**
DATES DRILLED:	**7/16/2014**	HAMMER WT./DROP	**N/A**
		DEPTH TO WATER	**N/A**

NOTES:
Refusal at 10 and 10.5'

Water level during drilling

DEPTH	SOIL SYMBOLS	SOIL DESCRIPTION	Sample Depth	PID (ppm)
0		SP: Brown sand (f-vf) with coal; some silt and gravel	Sampled 0-2"	0.5
			Sampled 12-24"	0.7
-5		SP: Brown sand (f); some coal, silt, gravel and crushed shale		
-10		SP: Grey/brown sand (f-vf); some silt, coal and gravel; some orange oxidation	Sampled 9-10.5'	0.4

PVE Sheffler

One Civic Center Plaza
Suite 501
Poughkeepsie, New York
(845) 454-2544

SOIL BORING LOG

BOREHOLE NO.: **PH-19**

TOTAL DEPTH: **15.5'**

PROJECT INFORMATION		DRILLING INFORMATION	
PROJECT #:	**560909**	DRILLING CO.:	**GeoLogic**
SITE LOCATION:	**HRPC**	RIG TYPE:	**Geoprobe 6620**
LOGGED BY:	**Conor Tarbell**	METHOD OF DRILLING:	**Direct Push**
PROJECT MANAGER:	**Christopher Brown**	SAMPLING METHODS:	**4' Macro Core**
DATES DRILLED:	**7/16/2014**	HAMMER WT./DROP	**N/A**
		DEPTH TO WATER	**N/A**

NOTES:
Refusal at 11' and 15.5'

Water level during drilling

DEPTH	SOIL SYMBOLS	SOIL DESCRIPTION	Sample Depth	PID (ppm)
0		SP: Light brown/yellow/grey sand (f-vf); some gravel/crushed shale and silt	Sampled 0-2"	0.3
			Sampled 12-24"	0.2
-5				
-10		ML: Light brown sandy silt; some gravel; trace clay		
			Sampled 12-13'	0.5
		SP: Light brown sand (f-vf); some gravel and silt		
-15				

PVE Sheffler

One Civic Center Plaza
Suite 501
Poughkeepsie, New York
(845) 454-2544

SOIL BORING LOG

BOREHOLE NO.: **PH-20**

TOTAL DEPTH: **10'**

PROJECT INFORMATION		DRILLING INFORMATION	
PROJECT #:	**560909**	DRILLING CO.:	**GeoLogic**
SITE LOCATION:	**HRPC**	RIG TYPE:	**Geoprobe 6620**
LOGGED BY:	**Conor Tarbell**	METHOD OF DRILLING:	**Direct Push**
PROJECT MANAGER:	**Christopher Brown**	SAMPLING METHODS:	**4' Macro Core**
DATES DRILLED:	**7/17/2014**	HAMMER WT./DROP	**N/A**
		DEPTH TO WATER	**N/A**

NOTES:
Refusal at 10' and 10'

Water level during drilling

DEPTH	SOIL SYMBOLS	SOIL DESCRIPTION	Sample Depth	PID (ppm)
0		SP: Light brown/grey sand (f-vf); some gravel/crushed shale and silt; trace coal	Sampled 0-2"	0.0
			Sampled 12-24"	0.0
		SHATTERED: Crushed shale		
		SP: Light brown/grey sand (m-vf) with crushed shale; some gravel; trace silt and coal		
-5		COAL: Petrified wood with coal		
		SP: Light brown sand (f-vf); some gravel/crushed shale and silt.	Sampled 7-9'	0.0
-10				

SOIL BORING LOG

PVE Sheffler

One Civic Center Plaza
Suite 501
Poughkeepsie, New York
(845) 454-2544

BOREHOLE NO.: **PH-21**

TOTAL DEPTH: **21.5'**

PROJECT INFORMATION		DRILLING INFORMATION	
PROJECT #:	**560909**	DRILLING CO.:	**GeoLogic**
SITE LOCATION:	**HRPC**	RIG TYPE:	**Geoprobe 6620**
LOGGED BY:	**Conor Tarbell**	METHOD OF DRILLING:	**Direct Push**
PROJECT MANAGER:	**Christopher Brown**	SAMPLING METHODS:	**4' Macro Core**
DATES DRILLED:	**7/17/2014**	HAMMER WT./DROP	**N/A**
		DEPTH TO WATER	**N/A**

NOTES:
Refusal at 21.5'

Water level during drilling

DEPTH	SOIL SYMBOLS	SOIL DESCRIPTION	Sample Depth	PID (ppm)
0		SP: Brown sand (f-vf); some gravel/crushed shale, coal and silt; trace brick	Sampled 0-2"	0.5
			Sampled 12-24"	0.0
-5		SP: Light brown sand (m-f); trace gravel, coal and brick		
		ML: Light brown/yellow sandy silt; some course sands; trace gravel		
-10		SP: Brown sand; some gravel		
		ML: Light brown/yellow sandy silt; some gravel and clay		
-15		SP: Brown/black sand (c-f); trace coal		
		ML: Brown sandy silt; some gravel and clay; trace coal; signs of weathered rock	Sampled 18-19'	0.0
-20				

PVE Sheffler

48 Springside Avenue
Poughkeepsie, New York
(845) 454-2544

SOIL BORING LOG

BOREHOLE NO.: **PH-22**

TOTAL DEPTH: **20'**

PROJECT INFORMATION		DRILLING INFORMATION	
PROJECT #:	**560909**	DRILLING CO.:	**GeoLogic**
SITE LOCATION:	**HRPC**	RIG TYPE:	**2' Split Spoon**
LOGGED BY:	**Conor Tarbell**	METHOD OF DRILLING:	**Auger to HSA**
PROJECT MANAGER:	**Christopher Brown**	SAMPLING METHODS:	**2' Split Spoon**
DATES DRILLED:	**12/18/14**	HAMMER WT./DROP	**N/A**
		DEPTH TO WATER	**16'**

NOTES:

▽ Water level during drilling

DEPTH (FT)	SOIL SYMBOLS	SOIL DESCRIPTION		Sample Depth	PID (ppm)
00		ASPHALT: Asphalt			
		OL: Black and brown silt and clay; little to some sand; little gravel; brick fragments		Sampled from 2-4'	0.0
		SC: Brown sand; trace silt and clay			
		ML: Silty clay; trace sand; wet			
10		SC: Brown sand; silt and clay; trace gravel			
		ML: Brown/gray silt and clay; little to some sand; little gravel		Sampled from 12-14'	0.0
		SC: Brown sand; little to some silt and clay; little to some gravel; saturated	▽		
20					

PVE Sheffler

48 Springside Avenue
Poughkeepsie, New York
(845) 454-2544

SOIL BORING LOG

BOREHOLE NO.: **PH-23**

TOTAL DEPTH: **16'**

PROJECT INFORMATION		DRILLING INFORMATION	
PROJECT #:	**560909**	DRILLING CO.:	**GeoLogic**
SITE LOCATION:	**HRPC**	RIG TYPE:	**2' Split Spoon**
LOGGED BY:	**Conor Tarbell**	METHOD OF DRILLING:	**Auger to HSA**
PROJECT MANAGER:	**Christopher Brown**	SAMPLING METHODS:	**2' Split Spoon**
DATES DRILLED:	**12/18/14**	HAMMER WT./DROP	**N/A**
		DEPTH TO WATER	**9.5**

NOTES:
Saturation for >5'; completed boring to 16'

Water level during drilling

DEPTH (FT)	SOIL SYMBOLS	SOIL DESCRIPTION		Sample Depth	PID (ppm)
00		SW: Organic topsoil at surface; medium sand; some gravel; brick/coal fragments throughout			
		SC: Medium brown sand; some silty clay; trace to some gravel		Sampled from 2-5'	0.0
		ML: Silty sand; trace gravel (wet)			
10		SP: Brown coarse grain sand; fine gravel; saturated	▽	Sampled from 8-10'	0.0

PVE Sheffler

48 Springside Avenue
Poughkeepsie, New York
(845) 454-2544

SOIL BORING LOG

BOREHOLE NO.: **PH-24**

TOTAL DEPTH: **20'**

PROJECT INFORMATION		DRILLING INFORMATION	
PROJECT #:	**560909**	DRILLING CO.:	**GeoLogic**
SITE LOCATION:	**HRPC**	RIG TYPE:	**2' Split Spoon**
LOGGED BY:	**Conor Tarbell**	METHOD OF DRILLING:	**Auger to HSA**
PROJECT MANAGER:	**Christopher Brown**	SAMPLING METHODS:	**2' Split Spoon**
DATES DRILLED:	**12/18/14**	HAMMER WT./DROP	**N/A**
		DEPTH TO WATER	**16'**
NOTES:		▽	Water level during drilling

DEPTH (FT)	SOIL SYMBOLS	SOIL DESCRIPTION		Sample Depth	PID (ppm)
00		SM: Medium brown sand and silt; trace gravel; coal fragments throughout			
		COAL: Coal; coal ash and crushed rock throughout		Sampled from 2-5'	0.0
		SC: Fine brown/gray sand; trace silt; crushed rock			
		SHATTERED: Crushed rock			
		SC: Red brown/brown sand; little silt and clay; little to some gravel			
10		ML: Brown silt/clay; little to some sand; little gravel			
		SC: Brown sand; little to some silt and clay; little gravel			
		SC: Brown/gray sand; trace to little silt and clay; little to some gravel			
		SC: Brown sand; little to some silt and clay; little to some gravel; saturated at 16'	▽	Sampled from 16-18'	0.0
20					

PVE Sheffler
One Civic Center Plaza
Suite 501
Poughkeepsie, New York
(845) 454-2544

SOIL BORING LOG

BOREHOLE NO.: **PH-SS-1**

TOTAL DEPTH: **6'**

PROJECT INFORMATION		DRILLING INFORMATION	
PROJECT #:	**560909**	DRILLING CO.:	**HES**
SITE LOCATION:	**HRPC**	RIG TYPE:	**Geoprobe**
LOGGED BY:	**Conor Tarbell**	METHOD OF DRILLING:	**Direct Push**
PROJECT MANAGER:	**Christopher Brown**	SAMPLING METHODS:	**4' Macro Core**
DATES DRILLED:	**5/7/2014**	HAMMER WT./DROP	**N/A**
		DEPTH TO WATER	**Not Established**

NOTES:

Water level during drilling

DEPTH	SOIL SYMBOLS	SOIL DESCRIPTION	Sample Depth	PID (ppm)
0	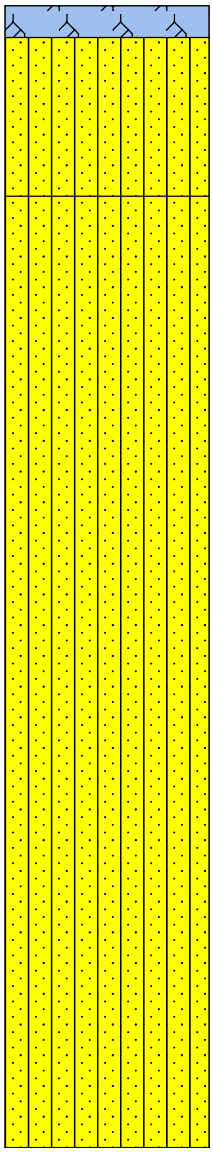	TOPSOIL: Dark brown organic topsoil		
		SM: Brown sand and clayey silt; coal fragments		
		SM: Brown and gray sand; little clayey silt; some to little gravel; trace coal in upper portion	Sampled from between 1-2'	0.1
			Sampled from between 2-3'	0.4
-5				

PVE Sheffler
One Civic Center Plaza
Suite 501
Poughkeepsie, New York
(845) 454-2544

SOIL BORING LOG

BOREHOLE NO.: **PH-SS-2**

TOTAL DEPTH: **6'**

PROJECT INFORMATION		DRILLING INFORMATION	
PROJECT #:	**560909**	DRILLING CO.:	**HES**
SITE LOCATION:	**HRPC**	RIG TYPE:	**Geoprobe**
LOGGED BY:	**Conor Tarbell**	METHOD OF DRILLING:	**Direct Push**
PROJECT MANAGER:	**Christopher Brown**	SAMPLING METHODS:	**4' Macro Core**
DATES DRILLED:	**5/7/2014**	HAMMER WT./DROP	**N/A**
		DEPTH TO WATER	**Not Established**

NOTES:

Water level during drilling

DEPTH	SOIL SYMBOLS	SOIL DESCRIPTION	Sample Depth	PID (ppm)
0		TOPSOIL: Dark brown organic topsoil; trace coal		
		GM: Few inches of topsoil; gravel; soil; coal	Sampled from between 1-2'	3.2
-5		SM: Brown and gray fine sand and clayey silt and gravel	Sampled from between 4-5'	0.4

PVE Sheffler
One Civic Center Plaza
Suite 501
Poughkeepsie, New York
(845) 454-2544

SOIL BORING LOG

BOREHOLE NO.: **PH-SS-3**

TOTAL DEPTH: **6'**

PROJECT INFORMATION		DRILLING INFORMATION	
PROJECT #:	**560909**	DRILLING CO.:	**HES**
SITE LOCATION:	**HRPC**	RIG TYPE:	**Geoprobe**
LOGGED BY:	**Conor Tarbell**	METHOD OF DRILLING:	**Direct Push**
PROJECT MANAGER:	**Christopher Brown**	SAMPLING METHODS:	**4' Macro Core**
DATES DRILLED:	**5/7/2014**	HAMMER WT./DROP	**N/A**
		DEPTH TO WATER	**Not Established**

NOTES:

Water level during drilling

DEPTH	SOIL SYMBOLS	SOIL DESCRIPTION	Sample Depth	PID (ppm)
0		TOPSOIL: Medium brown topsoil and gravel/fill		
		ML: Brown clayey silt and fine sand		
		SM: Brown and gray sand; little clayey silt; coal fragments	Sampled from between 1-2'	1.9
		SM: Rust; brown fine sand and clayey silt; some gravel	Sampled from between 2-3'	2.1
-5		SM: Rust; fine sand and silt		

PVE Sheffler

One Civic Center Plaza
Suite 501
Poughkeepsie, New York
(845) 454-2544

SOIL BORING LOG

BOREHOLE NO.: **PH-SS-4**

TOTAL DEPTH: **6'**

PROJECT INFORMATION		DRILLING INFORMATION	
PROJECT #:	**560909**	DRILLING CO.:	**HES**
SITE LOCATION:	**HRPC**	RIG TYPE:	**Geoprobe**
LOGGED BY:	**Conor Tarbell**	METHOD OF DRILLING:	**Direct Push**
PROJECT MANAGER:	**Christopher Brown**	SAMPLING METHODS:	**4' Macro Core**
DATES DRILLED:	**5/7/2014**	HAMMER WT./DROP	**N/A**
		DEPTH TO WATER	**Not Established**
NOTES:		▽	Water level during drilling

DEPTH	SOIL SYMBOLS	SOIL DESCRIPTION	Sample Depth	PID (ppm)
0		TOPSOIL: Dark brown organic topsoil SW: Brown and gray sand; trace to little silt and clay; little gravel; coal fragments in upper 1'	Sampled from between 1-2'	0.0
-5			Sampled from between 4-5'	0.4

PVE Sheffler
One Civic Center Plaza
Suite 501
Poughkeepsie, New York
(845) 454-2544

SOIL BORING LOG

BOREHOLE NO.: **PH-SS-5**

TOTAL DEPTH: **6'**

PROJECT INFORMATION		DRILLING INFORMATION	
PROJECT #:	**560909**	DRILLING CO.:	**HES**
SITE LOCATION:	**Hudson River Psych Center North**	RIG TYPE:	**Geoprobe**
LOGGED BY:	**Stephanie Lewison**	METHOD OF DRILLING:	**Direct Push**
PROJECT MANAGER:	**Christopher Brown**	SAMPLING METHODS:	**4' Macro Core**
DATES DRILLED:	**5-6-14**	HAMMER WT./DROP	**N/A**
		DEPTH TO WATER	**NE**

NOTES:
Sunny, 55F.

Water level during drilling

DEPTH	SOIL SYMBOLS	SOIL DESCRIPTION	Sample Depth	PID (ppm)
0		GM: Gravel and sand, some broken rock, trace coal	Sampled 0-2"	3.7 ppm
			Sampled 1-2'	0.0 ppm
-5		ML: Brown, moist, dense clay	Sampled 4-5'	1.7 ppm

PVE Sheffler

48 Springside Avenue
Poughkeepsie, New York
(845) 454-2544

SOIL BORING LOG

BOREHOLE NO.: **PH-SS-6**

TOTAL DEPTH: **6'**

PROJECT INFORMATION		DRILLING INFORMATION	
PROJECT #:	**560909**	DRILLING CO.:	**HES**
SITE LOCATION:	**Hudson River Psych Center North**	RIG TYPE:	**Geoprobe**
LOGGED BY:	**Stephanie Lewison**	METHOD OF DRILLING:	**Direct Push**
PROJECT MANAGER:	**Christopher Brown**	SAMPLING METHODS:	**4' Macro Core**
DATES DRILLED:	**5-6-14**	HAMMER WT./DROP	**N/A**
		DEPTH TO WATER	**NE**

NOTES:
Sunny, 55F.

Water level during drilling

DEPTH (FT)	SOIL SYMBOLS	SOIL DESCRIPTION	Sample Depth	PID (ppm)
00		SW: Brown, dry, sand, trace gravel, trace coal fragments	Sampled 0-2"	1.9 ppm
			Sampled 1-2'	6.7 ppm
		COAL: Coal fragments mixed with sand and gravel		
		ML: Brown, wet, clay	Sampled 3.5-5'	7.1 ppm
		SW: Brown, dry to moist, sand and gravel		

PVE Sheffler

One Civic Center Plaza
Suite 501
Poughkeepsie, New York
(845) 454-2544

SOIL BORING LOG

BOREHOLE NO.: **PH-SS-7**

TOTAL DEPTH: **2'**

PROJECT INFORMATION		DRILLING INFORMATION	
PROJECT #:	**560909**	DRILLING CO.:	**GeoLogic**
SITE LOCATION:	**HRPC**	RIG TYPE:	**Geoprobe 6620**
LOGGED BY:	**Alan Mason**	METHOD OF DRILLING:	**Direct Push**
PROJECT MANAGER:	**Christopher Brown**	SAMPLING METHODS:	**4' Macro Core**
DATES DRILLED:	**7/17/2014**	HAMMER WT./DROP	**N/A**
		DEPTH TO WATER	**N/A**

NOTES:

Water level during drilling

DEPTH	SOIL SYMBOLS	SOIL DESCRIPTION	Sample Depth	PID (ppm)
0		SP: brown SAND (c-f) some gravel/crushed shale	Sampled 0-2"	0.0
			Sampled 12-24"	0.0

PVE Sheffler
One Civic Center Plaza
Suite 501
Poughkeepsie, New York
(845) 454-2544

SOIL BORING LOG

BOREHOLE NO.: **GB-TMW-1**

TOTAL DEPTH: **24'**

PROJECT INFORMATION		DRILLING INFORMATION	
PROJECT #:	**560909**	DRILLING CO.:	**HES**
SITE LOCATION:	**HRPC**	RIG TYPE:	**Geoprobe**
LOGGED BY:	**Conor Tarbell**	METHOD OF DRILLING:	**Direct Push**
PROJECT MANAGER:	**Christopher Brown**	SAMPLING METHODS:	**4' Macro Core**
DATES DRILLED:	**5/15/2014**	HAMMER WT./DROP	**N/A**
		DEPTH TO WATER	**Not Established**

NOTES:
65 degrees Overcast

Water level during drilling

DEPTH	SOIL SYMBOLS	SOIL DESCRIPTION	Sample Depth	PID (ppm)
0		SP: Glacial till; brown sand; little to some gravel; little to some silt and clay		
-5				
-10				
-15		SW: Glacial till; brown sand; trace to little gravel; trace to little silt and clay	Sampled from between 15-16'	3.4
-20				

PVE Sheffler
One Civic Center Plaza
Suite 501
Poughkeepsie, New York
(845) 454-2544

SOIL BORING LOG

BOREHOLE NO.: **GB-TMW-2**

TOTAL DEPTH: **16'**

PROJECT INFORMATION		DRILLING INFORMATION	
PROJECT #:	**560909**	DRILLING CO.:	**HES**
SITE LOCATION:	**HRPC**	RIG TYPE:	**Geoprobe**
LOGGED BY:	**Conor Tarbell**	METHOD OF DRILLING:	**Direct Push**
PROJECT MANAGER:	**Christopher Brown**	SAMPLING METHODS:	**4' Macro Core**
DATES DRILLED:	**5/15/2014**	HAMMER WT./DROP	**N/A**
		DEPTH TO WATER	**Not Established**

NOTES:
65 degrees Overcast. Cave in occured prohibiting further depths.

▽ Water level during drilling

DEPTH	SOIL SYMBOLS	SOIL DESCRIPTION	Sample Depth	PID (ppm)
0		SC: Glacial till; brown silt and clay and sand; little to some gravel		
-5		SW: Glacial till; brown sand; little to some gravel; trace to little silt and clay		
-10				
-15		SW: Glacial till; brown sand; little to some gravel; trace to little silt and clay	Sampled from between 15-16'	NA

PVE Sheffler

One Civic Center Plaza
Suite 501
Poughkeepsie, New York
(845) 454-2544

SOIL BORING LOG

BOREHOLE NO.: **GB-TMW-3**

TOTAL DEPTH: **20'**

PROJECT INFORMATION		DRILLING INFORMATION	
PROJECT #:	**560909**	DRILLING CO.:	**HES**
SITE LOCATION:	**HRPC**	RIG TYPE:	**Geoprobe**
LOGGED BY:	**Conor Tarbell**	METHOD OF DRILLING:	**Direct Push**
PROJECT MANAGER:	**Christopher Brown**	SAMPLING METHODS:	**4' Macro Core**
DATES DRILLED:	**5/13/2014**	HAMMER WT./DROP	**N/A**
		DEPTH TO WATER	**4.5'**

NOTES:
55 degrees Overcast

▽ Water level during drilling

DEPTH	SOIL SYMBOLS	SOIL DESCRIPTION		Sample Depth	PID (ppm)
0		OL: Organic top soil			
		COAL: Coal ash; fill; brick; slag			
-5		SC: Brown sand and clayey silt; little gravel; wet at 4.5'	▽	Sampled from between 6-8'	0.6
-10		SC: Well graded; gravel; moist			
-15		SC: Brown/gray sand and clayey silt; shale encountered near 20' interval			
-20					

SOIL BORING LOG

PVE Sheffler

One Civic Center Plaza
Suite 501
Poughkeepsie, New York
(845) 454-2544

BOREHOLE NO.: **GB-TMW-4**

TOTAL DEPTH: **20'**

PROJECT INFORMATION		DRILLING INFORMATION	
PROJECT #:	**560909**	DRILLING CO.:	**HES**
SITE LOCATION:	**HRPC**	RIG TYPE:	**Geoprobe**
LOGGED BY:	**Conor Tarbell**	METHOD OF DRILLING:	**Direct Push**
PROJECT MANAGER:	**Christopher Brown**	SAMPLING METHODS:	**4' Macro Core**
DATES DRILLED:	**5/12/2014**	HAMMER WT./DROP	**N/A**
		DEPTH TO WATER	**7.5'**

NOTES:
75 degrees Sunny

▽ Water level during drilling

DEPTH	SOIL SYMBOLS	SOIL DESCRIPTION	Sample Depth	PID (ppm)
0		SC: Fill; brown sand; some clayey silt; moist; coal fragments		
-5		COAL: Coal Ash and slag		
		ML: Brown clayey silt; some to little gravel; wet		
-10		ML: Brown clayey silt; wet		
-15				
-20		GC: Gravel and clayey silt; wet	Sampled from between 19-20'	6.6

SOIL BORING LOG

PVE Sheffler

One Civic Center Plaza
Suite 501
Poughkeepsie, New York
(845) 454-2544

BOREHOLE NO.: **GB-TMW-5**

TOTAL DEPTH: **17'**

PROJECT INFORMATION		DRILLING INFORMATION	
PROJECT #:	**560909**	DRILLING CO.:	**Allied**
SITE LOCATION:	**HRPC**	RIG TYPE:	**Conventional Rig**
LOGGED BY:	**Conor Tarbell**	METHOD OF DRILLING:	**Auger**
PROJECT MANAGER:	**Christopher Brown**	SAMPLING METHODS:	**Split Spoon**
DATES DRILLED:	**5-27-14**	HAMMER WT./DROP	**N/A**
		DEPTH TO WATER	**13'**

NOTES:

▽ Water level during drilling

DEPTH	SOIL SYMBOLS	SOIL DESCRIPTION	Sample Depth	PID (ppm)
0		SP: Light brown sand and gravel		
-5				
-10		SP: Gravel with sand		
-15		GP: Small stone with sand	Sampled 12-17'	0.0

Appendix B – Monitoring Well Construction Diagrams

One Civic Center Plaza
Suite 501
Poughkeepsie, NY 12601
(845) 454-2544

Monitoring Well Construction Diagram

Project #: 560909

Project Name/Site: Hudson River Psychiatric Center

Well #: MW-AG-1

Location/Coordinates: _____

Geologist: CBT

Elevation of Ground Surface: _____

Driller: Allied Well Drilling

Drilling Method: Hollow-stem Auger

Drilling Fluid: _____

Date Start: 5/28/2014 Date End: 5/28/2014

Depth of Outer Casing (BLS): 2'

Depth of Inner Casing (BLS): 20'

Notes: _____

Elevations Relative to Land Surface

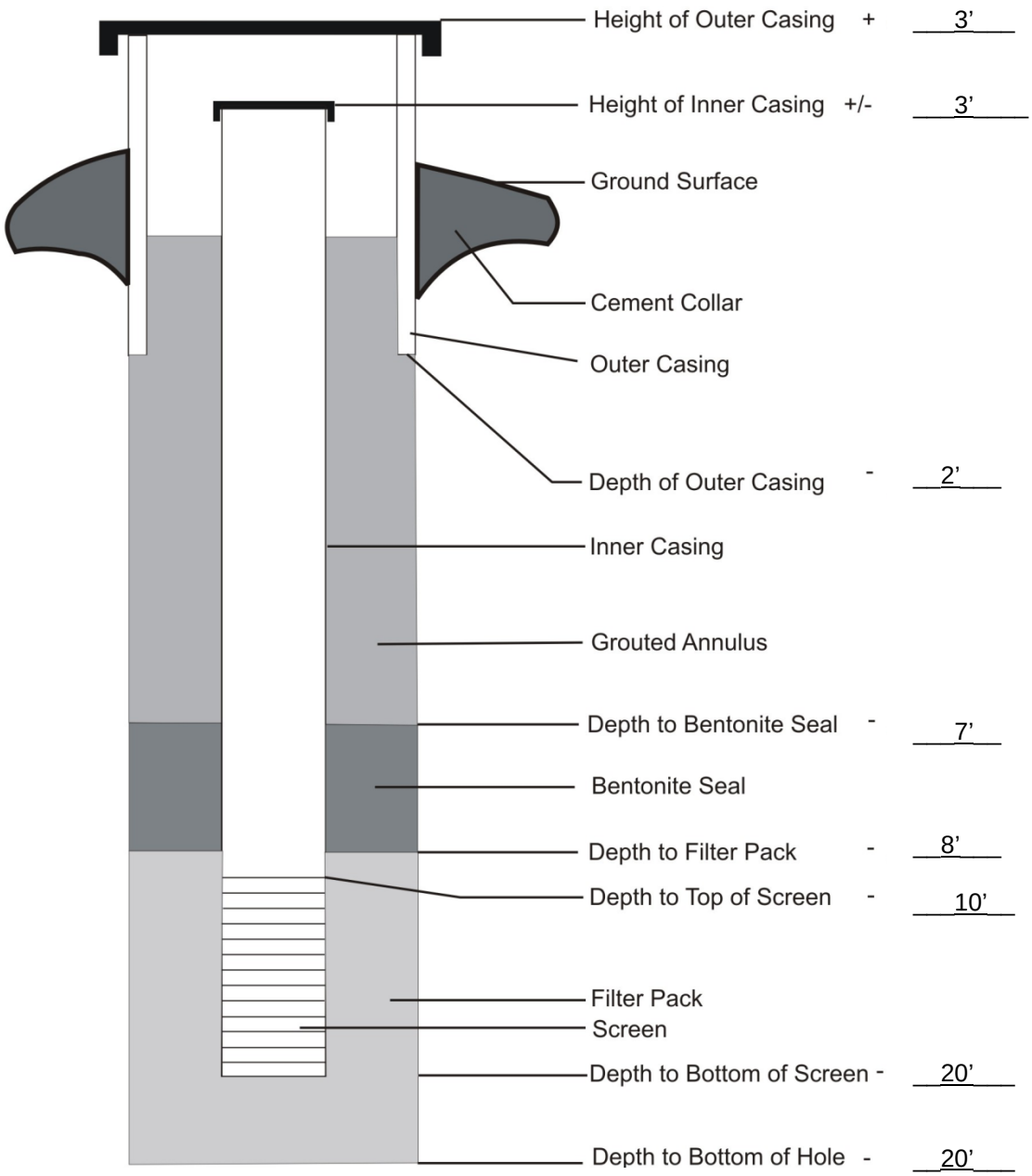

Auger Diameter	4.25"
Borehole Diameter	6"
Flush-to-grade Curb Box?	___Yes _X_No
Stick-up Pipe?	_X_Yes ___No
Outer Casing Diameter	4"
Outer Casing Material	Iron
Inner Casing Diameter	2"
Inner Casing Material	Schedule 40 PVC
Grout Type	NA
Bentonite Type	Chips
Filter Pack Type	#1 Sand
Screen Type/Slot Size	Schedule 40 PVC, 20 slot

One Civic Center Plaza
Suite 501
Poughkeepsie, NY 12601
(845) 454-2544

Monitoring Well Construction Diagram

Project #: 560909

Project Name/Site: Hudson River Psychiatric Center

Well #: MW-AG-2

Location/Coordinates: _____

Geologist: CBT/CBB

Elevation of Ground Surface: _____

Driller: Allied Well Drilling

Drilling Method: Hollow-stem Auger

Drilling Fluid: _____

Date Start: 5/28/2014 Date End: 5/28/2014

Depth of Outer Casing (BLS): 2'6"

Depth of Inner Casing (BLS): 15'

Notes: _____

Elevations Relative to Land Surface

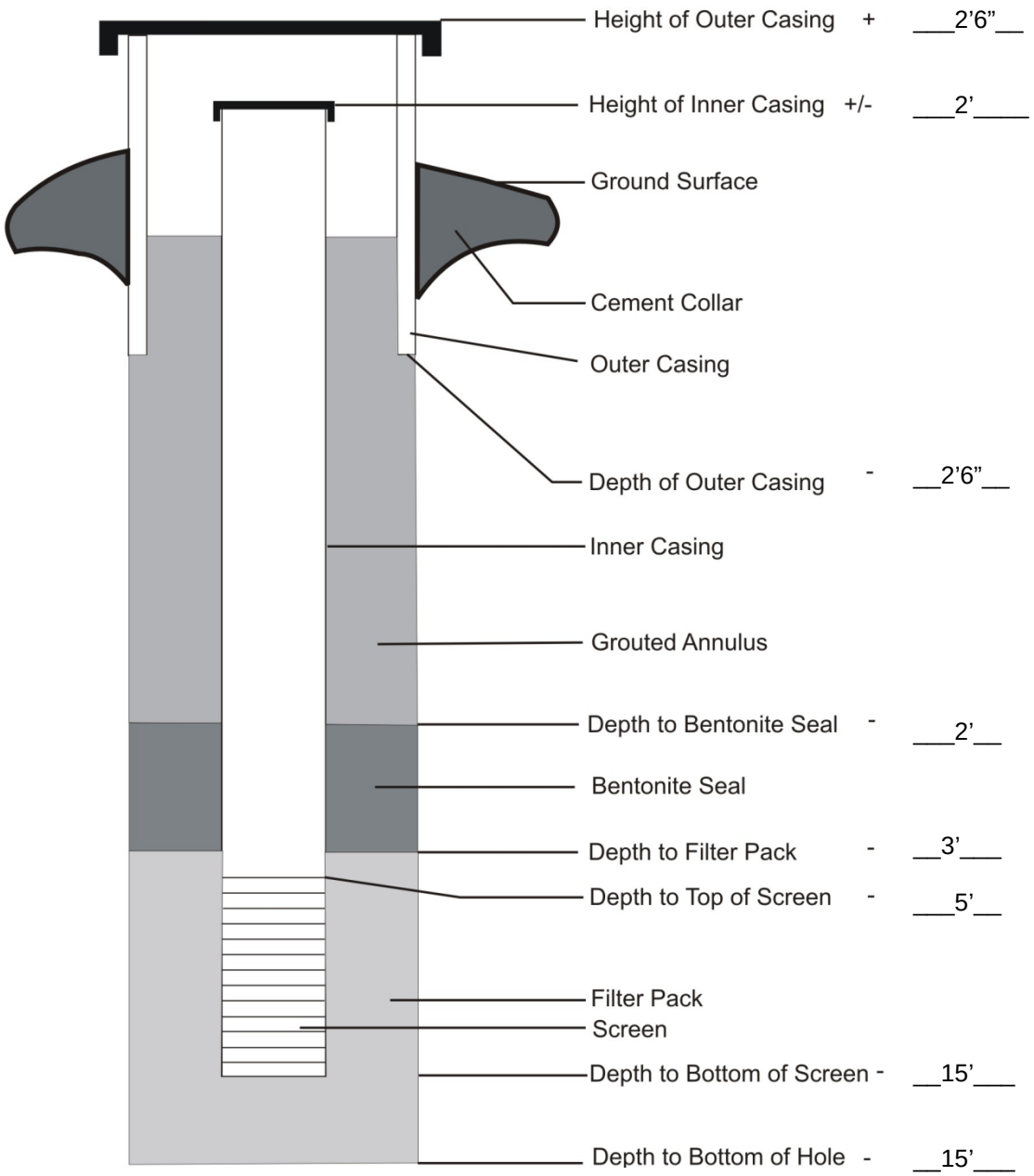

Auger Diameter	4.25"
Borehole Diameter	6"
Flush-to-grade Curb Box?	___Yes _X_No
Stick-up Pipe?	_X_Yes ___No
Outer Casing Diameter	4"
Outer Casing Material	Iron
Inner Casing Diameter	2"
Inner Casing Material	Schedule 40 PVC
Grout Type	NA
Bentonite Type	Chips
Filter Pack Type	#1 Sand
Screen Type/Slot Size	Schedule 40 PVC, 20 slot

One Civic Center Plaza
Suite 501
Poughkeepsie, NY 12601
(845) 454-2544

Monitoring Well Construction Diagram

Project #: 560909

Project Name/Site: Hudson River Psychiatric Center

Well #: MW-CW-2

Location/Coordinates: _____

Geologist: CBT

Elevation of Ground Surface: _____

Driller: Allied Well Drilling

Drilling Method: Hollow-stem Auger

Drilling Fluid: _____

Date Start: 5/28/2014 Date End: 5/28/2014

Depth of Outer Casing (BLS): 2'

Depth of Inner Casing (BLS): 26'

Notes: _____

Elevations Relative to Land Surface

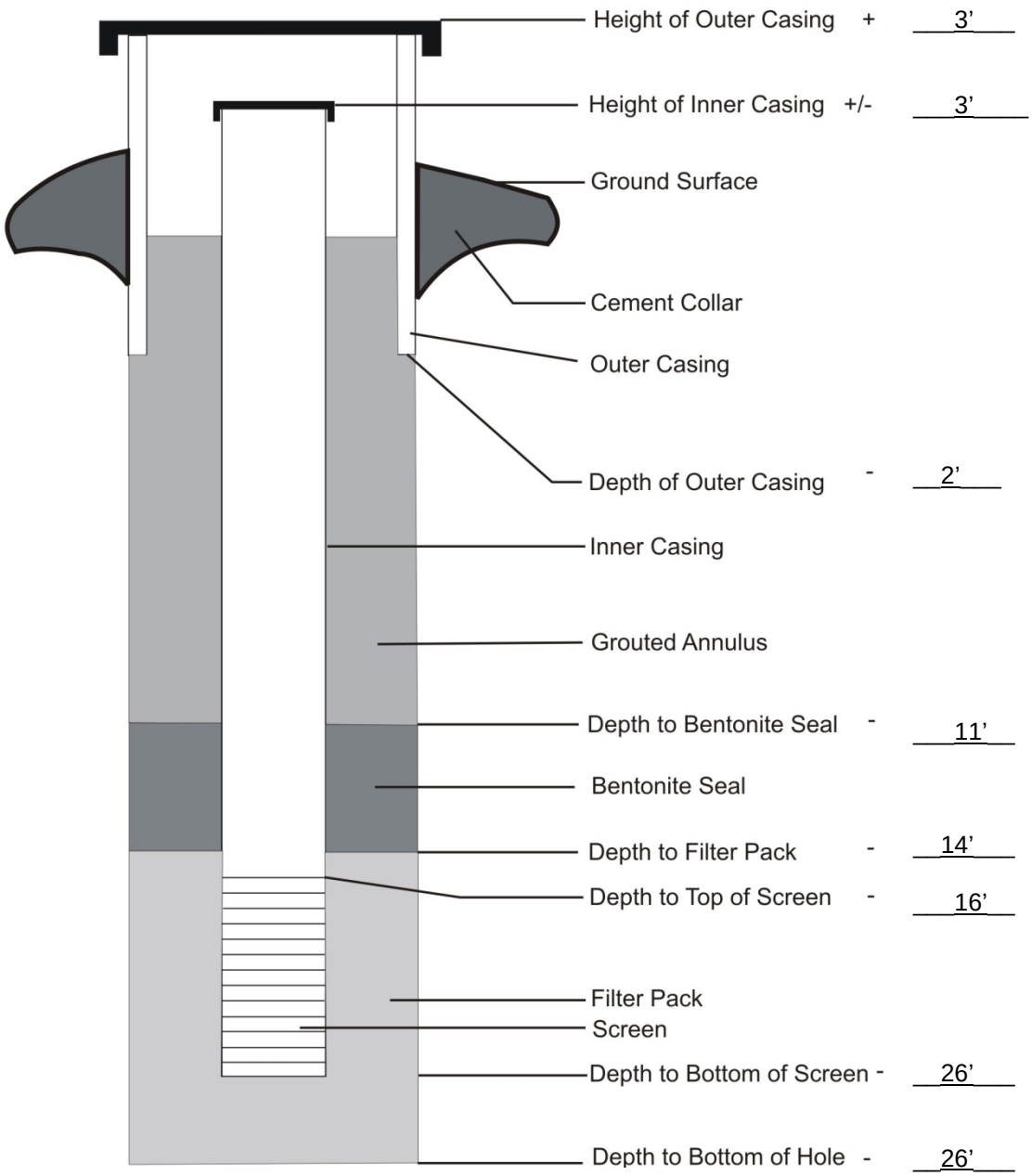

Auger Diameter	4.25"
Borehole Diameter	6"
Flush-to-grade Curb Box?	___Yes _X_No
Stick-up Pipe?	_X_Yes ___No
Outer Casing Diameter	4"
Outer Casing Material	Iron
Inner Casing Diameter	2"
Inner Casing Material	Schedule 40 PVC
Grout Type	NA
Bentonite Type	Chips
Filter Pack Type	#1 Sand
Screen Type/Slot Size	Schedule 40 PVC, 20 slot

One Civic Center Plaza
Suite 501
Poughkeepsie, NY 12601
(845) 454-2544

Monitoring Well Construction Diagram

Project #: 560909

Project Name/Site: Hudson River Psychiatric Center

Well #: MW-FS-1

Location/Coordinates: _____

Geologist: CBT/CBB

Elevation of Ground Surface: _____

Driller: Allied Well Drilling

Drilling Method: Hollow-Stem Auger

Drilling Fluid: _____

Date Start: 5/28/2014 Date End: 5/28/2014

Depth of Outer Casing (BLS): 8”

Depth of Inner Casing (BLS): 31’6”

Notes: _____

Elevations Relative to Land Surface

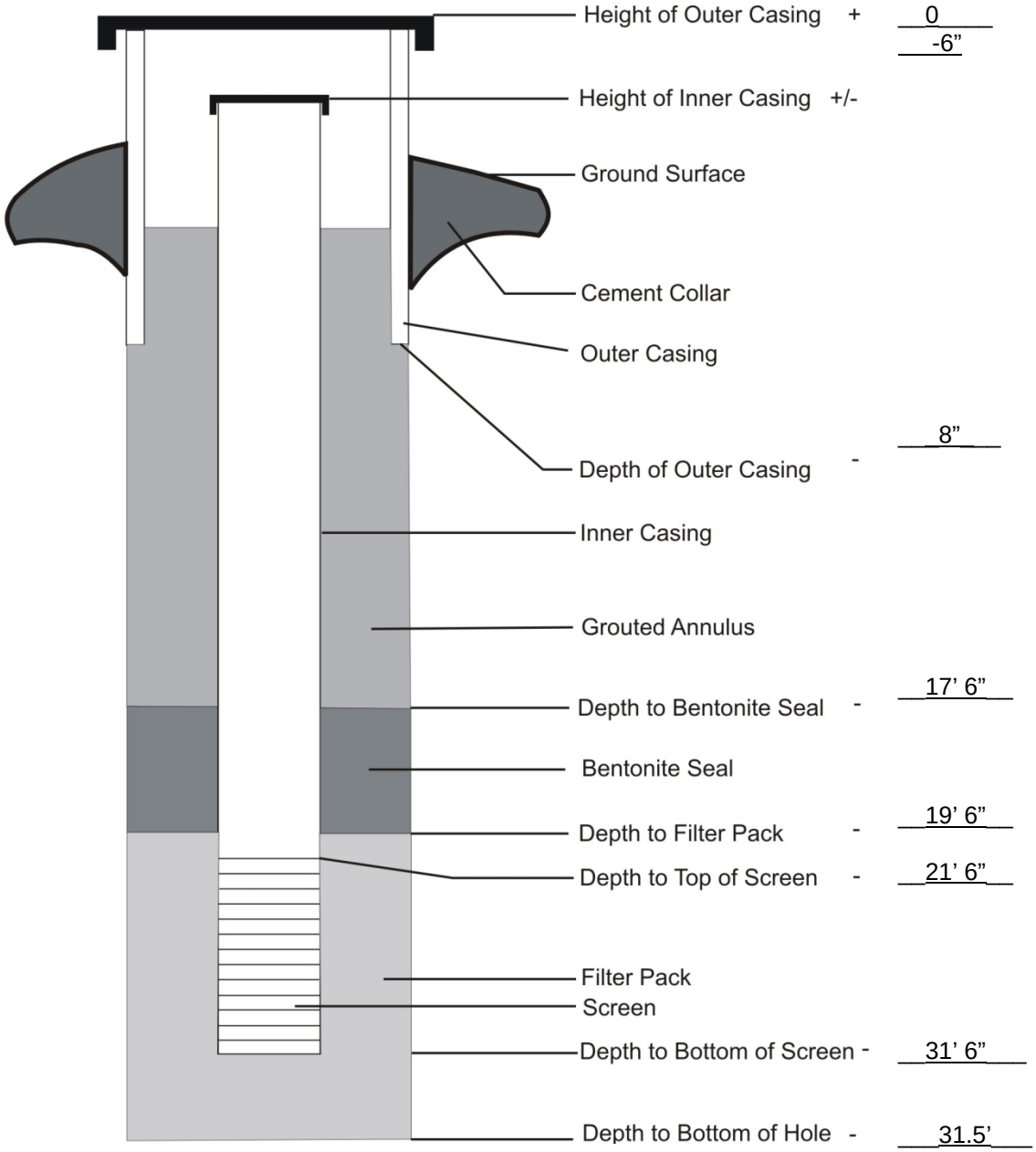

Auger Diameter	4.25”
Borehole Diameter	6”
Flush-to-grade Curb Box?	X Yes ___No
Stick-up Pipe?	___Yes X No
Outer Casing Diameter	5”
Outer Casing Material	Steel
Inner Casing Diameter	2”
Inner Casing Material	Schedule 40 PVC
Grout Type	NA
Bentonite Tye	Chip
Filter Pack Type	#1 Sand
Screen Type/Slot Size	Schedule 40 PVC, 20 slot

One Civic Center Plaza
Suite 501
Poughkeepsie, NY 12601
(845) 454-2544

Monitoring Well Construction Diagram

Project #: 560909

Project Name/Site: Hudson River Psychiatric Center

Well #: MW-PH-1

Location/Coordinates: _____

Geologist: CBT

Elevation of Ground Surface: _____

Driller: Allied Well Drilling

Drilling Method: Hollow-stem Auger

Drilling Fluid: _____

Date Start: 5/29/2014 Date End: 5/29/2014

Depth of Outer Casing (BLS): 3'

Depth of Inner Casing (BLS): 17'

Notes: _____

Elevations Relative to Land Surface

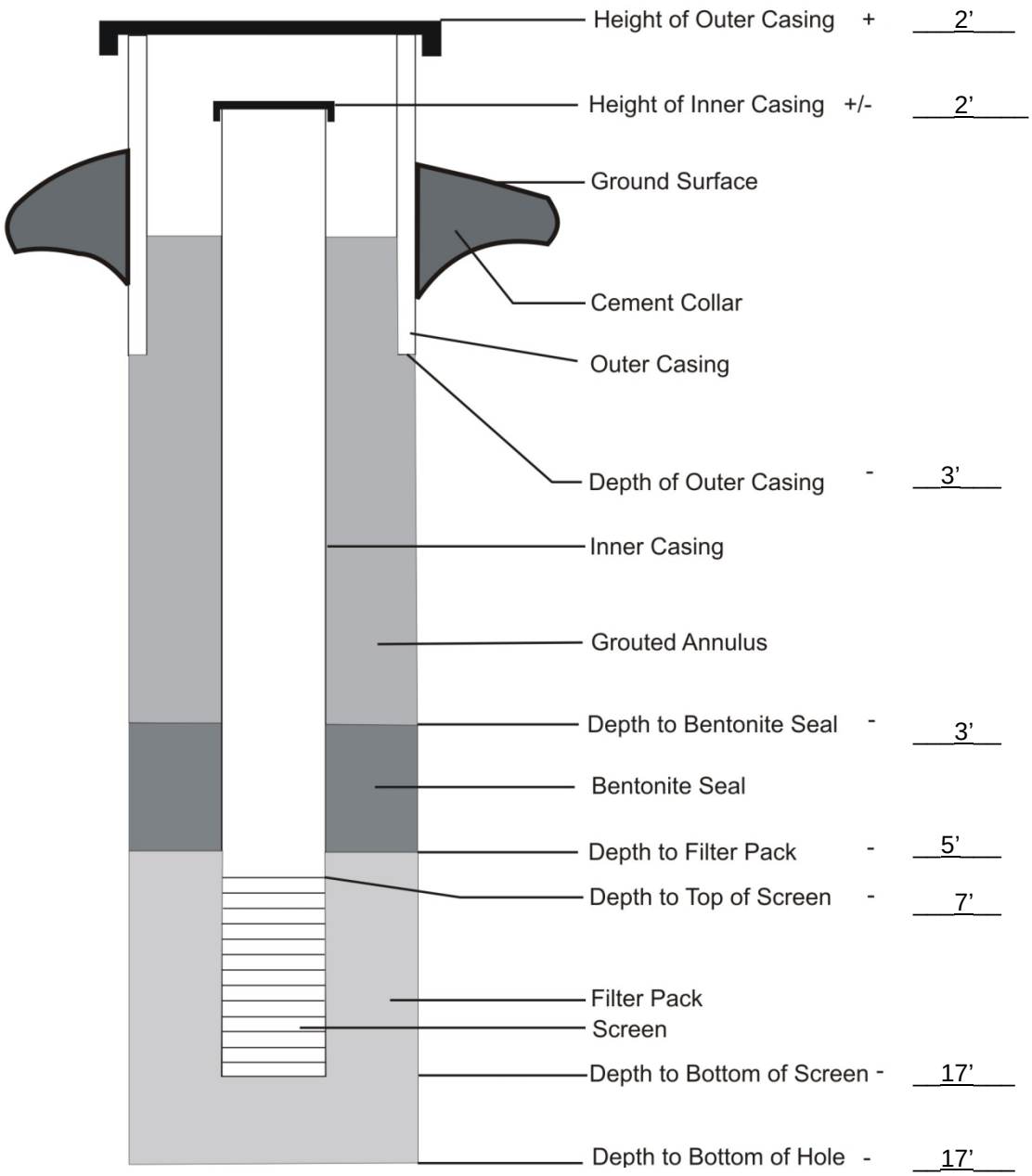

Auger Diameter	4.25"
Borehole Diameter	6"
Flush-to-grade Curb Box?	___Yes _X_No
Stick-up Pipe?	_X_Yes ___No
Outer Casing Diameter	4"
Outer Casing Material	Iron
Inner Casing Diameter	2"
Inner Casing Material	Schedule 40 PVC
Grout Type	NA
Bentonite Type	Chips
Filter Pack Type	#1 Sand
Screen Type/Slot Size	Schedule 40 PVC, 20 slot

One Civic Center Plaza
Suite 501
Poughkeepsie, NY 12601
(845) 454-2544

Monitoring Well Construction Diagram

Project #: 560909

Project Name/Site: Hudson River Psychiatric Center

Well #: TMW – 1

Location/Coordinates: _____

Geologist: CBT/TSP

Elevation of Ground Surface: _____

Driller: HydroEnvironmental Solutions

Drilling Method: GeoProbe

Drilling Fluid: _____

Date Start: 5/15/2014 Date End: 5/15/2014

Depth of Outer Casing (BLS): NA

Depth of Inner Casing (BLS): 18'8"

Notes: Drilled to 24' but cave in occurred to 18'8"

Elevations Relative to Land Surface

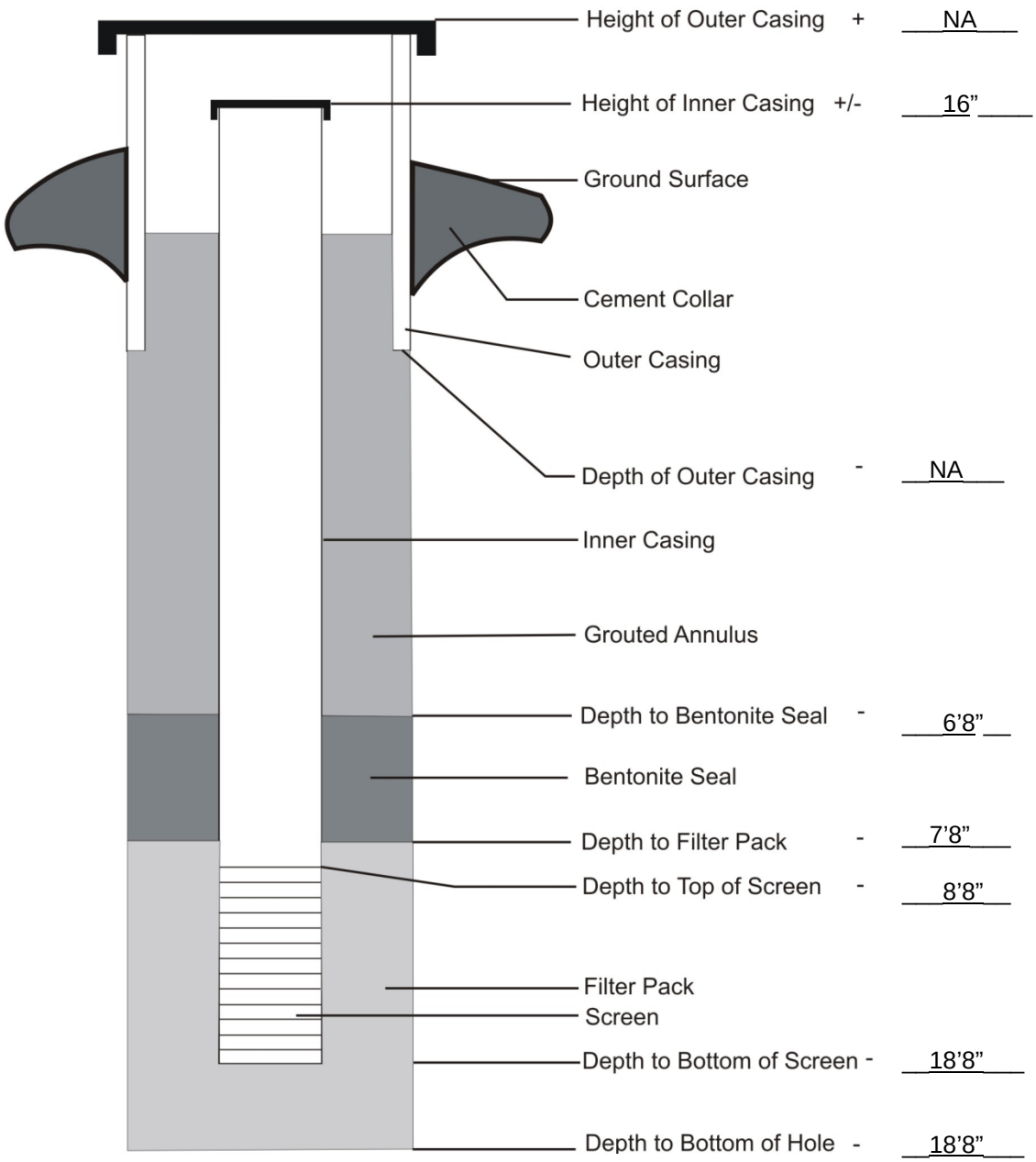

Core Barrel Diameter	3.25"
Borehole Diameter	3.25"
Flush-to-grade Curb Box?	___Yes _X_No
Stick-up Pipe?	_X_Yes ___No
Outer Casing Diameter	NA
Outer Casing Material	NA
Inner Casing Diameter	1"
Inner Casing Material	Schedule 40 PVC
Grout Type	NA
Bentonite Type	Chips
Filter Pack Type	#1 Sand
Screen Type/Slot Size	Schedule 40 PVC, 20 slot

One Civic Center Plaza
Suite 501
Poughkeepsie, NY 12601
(845) 454-2544

Monitoring Well Construction Diagram

Project #: 560909

Project Name/Site: Hudson River Psychiatric Center

Well #: TMW – 2

Location/Coordinates: _____

Geologist: CBB/CBT

Elevation of Ground Surface: _____

Driller: Allied Well Drilling

Drilling Method: Hollow-stem Auger

Drilling Fluid: _____

Date Start: 5/27/2014 Date End: 5/27/2014

Depth of Outer Casing (BLS): 2'

Depth of Inner Casing (BLS): 25'

Notes: _____

Elevations Relative to Land Surface

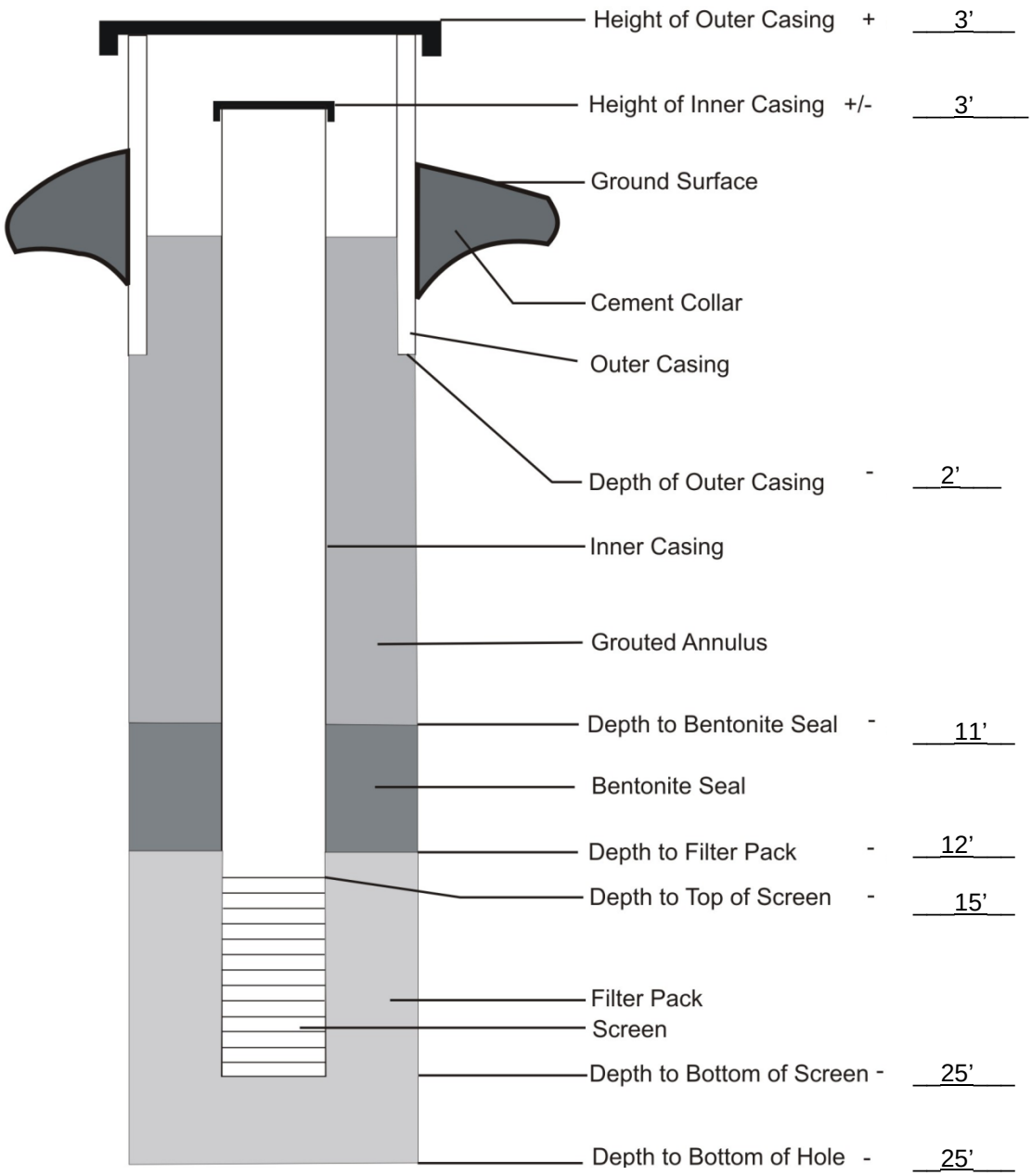

Auger Diameter	4.25"
Borehole Diameter	6"
Flush-to-grade Curb Box?	___Yes _X_No
Stick-up Pipe?	_X_Yes ___No
Outer Casing Diameter	4"
Outer Casing Material	Iron
Inner Casing Diameter	1"
Inner Casing Material	Schedule 40 PVC
Grout Type	NA
Bentonite Type	Chips
Filter Pack Type	#1 Sand
Screen Type/Slot Size	Schedule 40 PVC, 20 slot

One Civic Center Plaza
Suite 501
Poughkeepsie, NY 12601
(845) 454-2544

Monitoring Well Construction Diagram

Project #: 560909

Project Name/Site: Hudson River Psychiatric Center

Well #: TMW – 3

Location/Coordinates: _____

Geologist: CBT/TSP

Elevation of Ground Surface: _____

Driller: HydroEnvironmental Solutions

Drilling Method: GeoProbe

Drilling Fluid: _____

Date Start: 5/13/2014 Date End: 5/13/2014

Depth of Outer Casing (BLS): NA

Depth of Inner Casing (BLS): 20'

Notes: _____

Elevations Relative to Land Surface

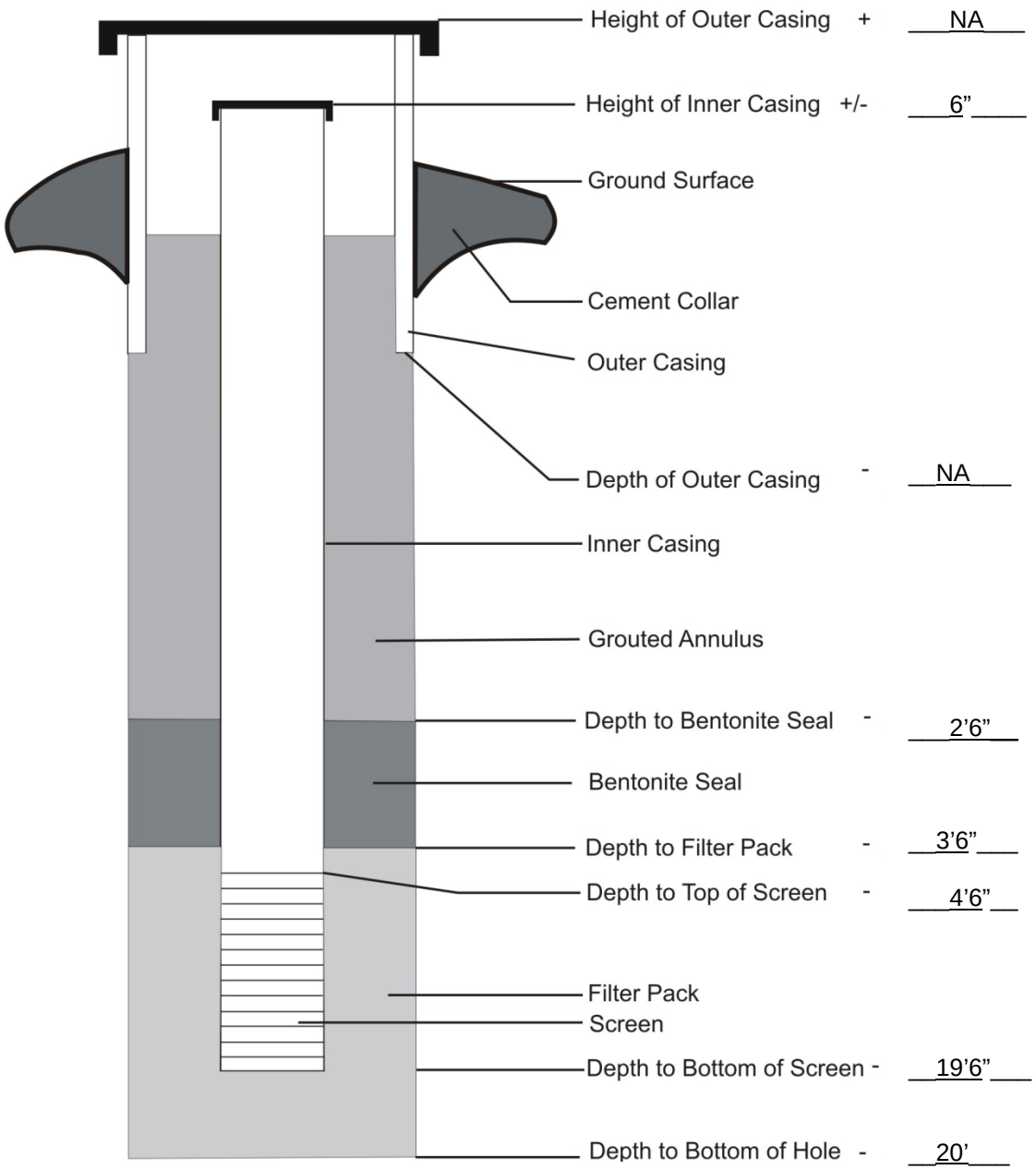

Core Barrel Diameter	3.25"
Borehole Diameter	3.25"
Flush-to-grade Curb Box?	___Yes _X_No
Stick-up Pipe?	_X_Yes ___No
Outer Casing Diameter	NA
Outer Casing Material	NA
Inner Casing Diameter	1"
Inner Casing Material	Schedule 40 PVC
Grout Type	NA
Bentonite Type	Chips
Filter Pack Type	#1 Sand
Screen Type/Slot Size	Schedule 40 PVC, 20 slot

One Civic Center Plaza
Suite 501
Poughkeepsie, NY 12601
(845) 454-2544

Monitoring Well Construction Diagram

Project #: 560909

Project Name/Site: Hudson River Psychiatric Center

Well #: TMW – 4

Location/Coordinates: _____

Geologist: CBT

Elevation of Ground Surface: _____

Driller: HydroEnvironmental Solutions

Drilling Method: GeoProbe

Drilling Fluid: _____

Date Start: 5/12/2014 Date End: 5/12/2014

Depth of Outer Casing (BLS): NA

Depth of Inner Casing (BLS): 20'

Notes: _____

Elevations Relative to Land Surface

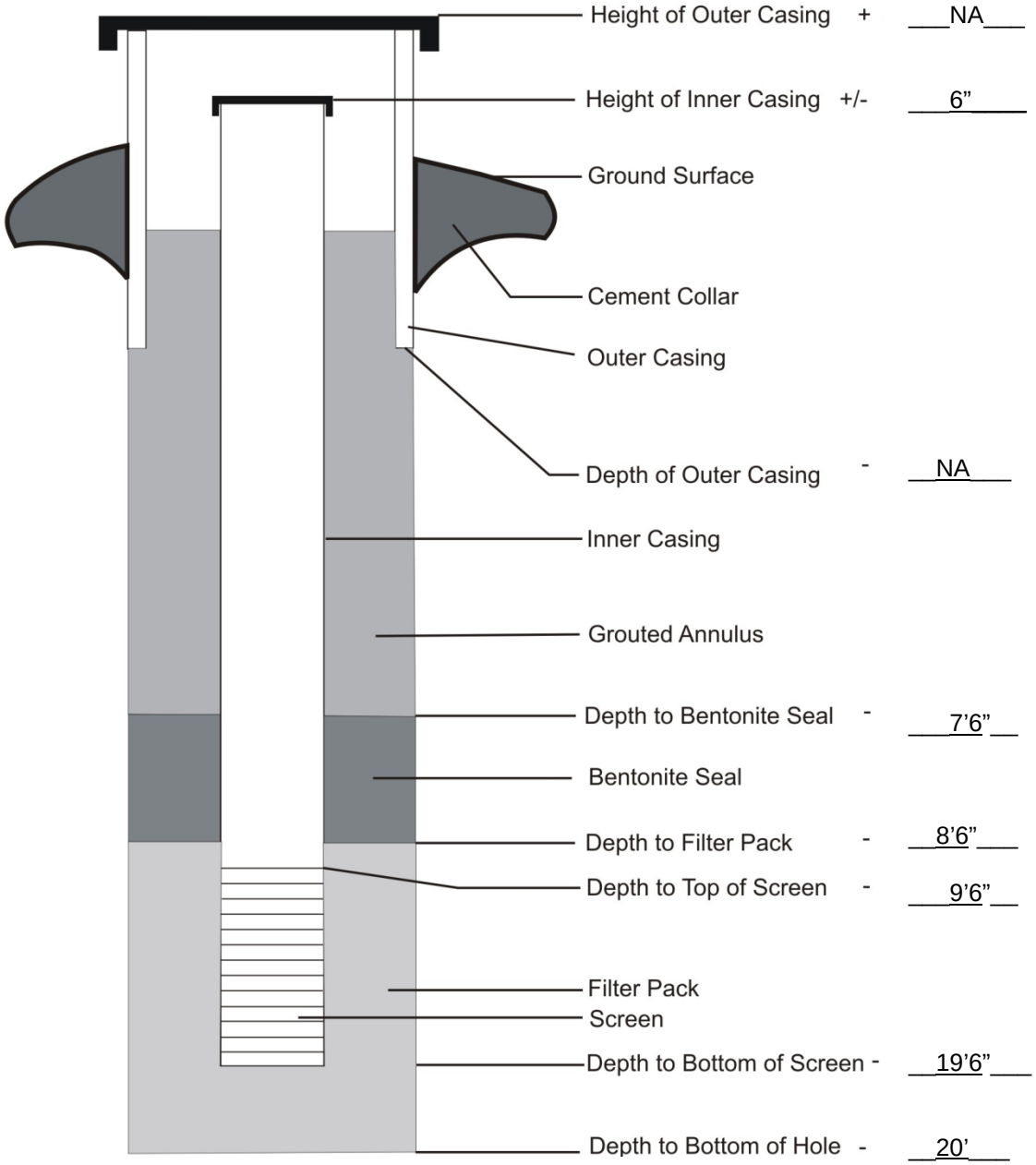

Core Barrel Diameter	3.25"
Borehole Diameter	3.25"
Flush-to-grade Curb Box?	___Yes _X_No
Stick-up Pipe?	_X_Yes ___No
Outer Casing Diameter	NA
Outer Casing Material	NA
Inner Casing Diameter	1"
Inner Casing Material	Schedule 40 PVC
Grout Type	NA
Bentonite Type	Chips
Filter Pack Type	#1 Sand
Screen Type/Slot Size	Schedule 40 PVC, 20 slot

One Civic Center Plaza
Suite 501
Poughkeepsie, NY 12601
(845) 454-2544

Monitoring Well Construction Diagram

Project #: 560909

Project Name/Site: Hudson River Psychiatric Center

Well #: TMW – 5

Location/Coordinates: _____

Geologist: CBB/CBT

Elevation of Ground Surface: _____

Driller: Allied Well Drilling

Drilling Method: Hollow-stem Auger

Drilling Fluid: _____

Date Start: 5/27/2014 Date End: 5/27/2014

Depth of Outer Casing (BLS): 2'

Depth of Inner Casing (BLS): 17'

Notes: _____

Elevations Relative to Land Surface

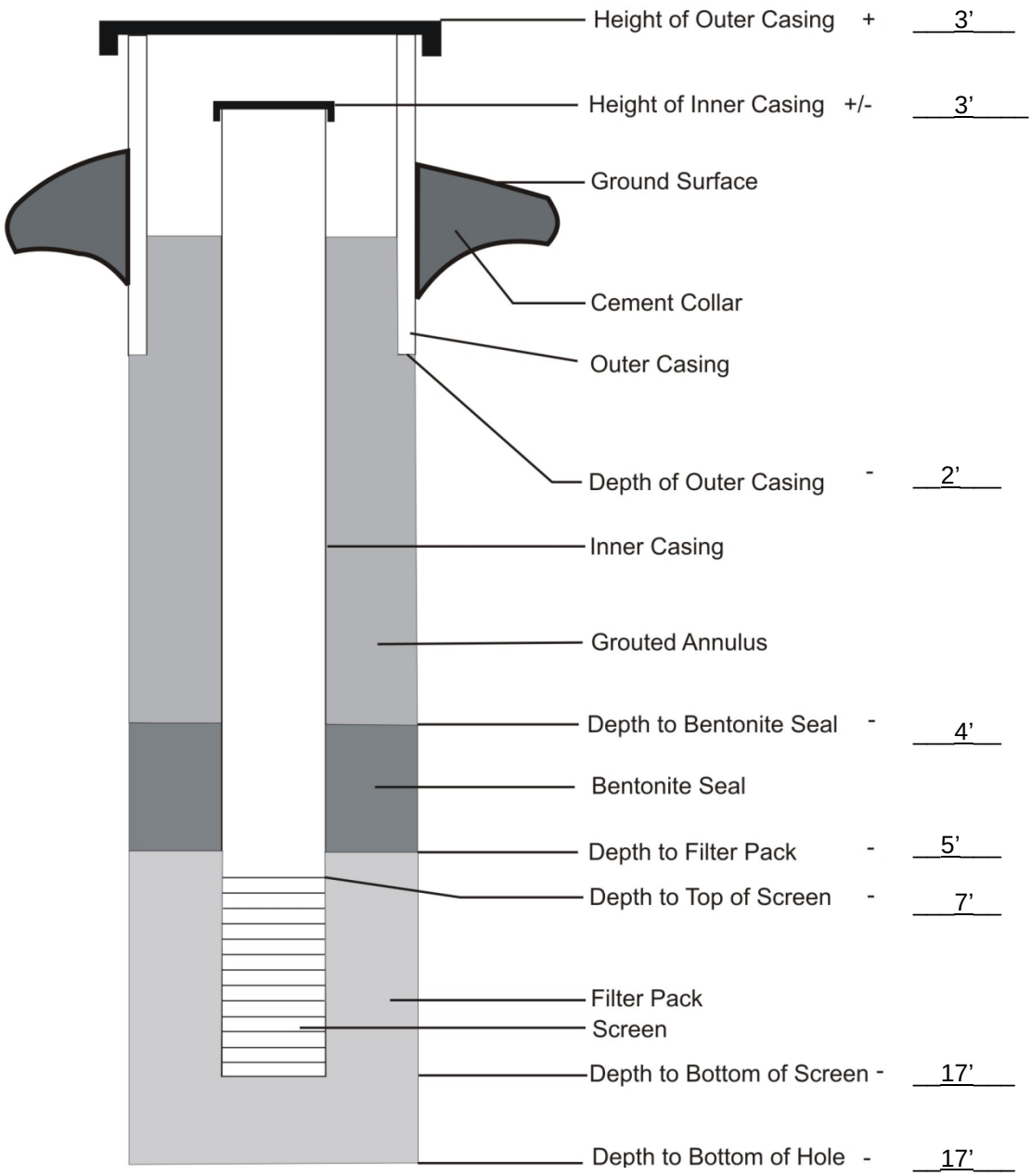

Auger Diameter	4.25"
Borehole Diameter	6"
Flush-to-grade Curb Box?	___Yes _X_No
Stick-up Pipe?	_X_Yes ___No
Outer Casing Diameter	4"
Outer Casing Material	Iron
Inner Casing Diameter	2"
Inner Casing Material	Schedule 40 PVC
Grout Type	NA
Bentonite Type	Chips
Filter Pack Type	#1 Sand
Screen Type/Slot Size	Schedule 40 PVC, 20 slot

One Civic Center Plaza
Suite 501
Poughkeepsie, NY 12601
(845) 454-2544

Monitoring Well Construction Diagram

Project #: ____560909_____

Project Name/Site: ___Hudson River Psychiatric Center_____

Well #: ___MW-FD-1_____

Location/Coordinates: _____

Geologist: ___ATM_____

Elevation of Ground Surface: _____

Driller: ___GeoLogic_____

Drilling Method:__ Conventional Auger _____

Drilling Fluid: _____

Date Start:____7/24/2014____Date End: ___7/24/2014_____

Depth of Outer Casing (BLS): ___2.5'_____

Depth of Inner Casing (BLS): ___25'_____

Notes:__ Groundwater encountered at approximately 21' _____

_____

Elevations Relative to Land Surface

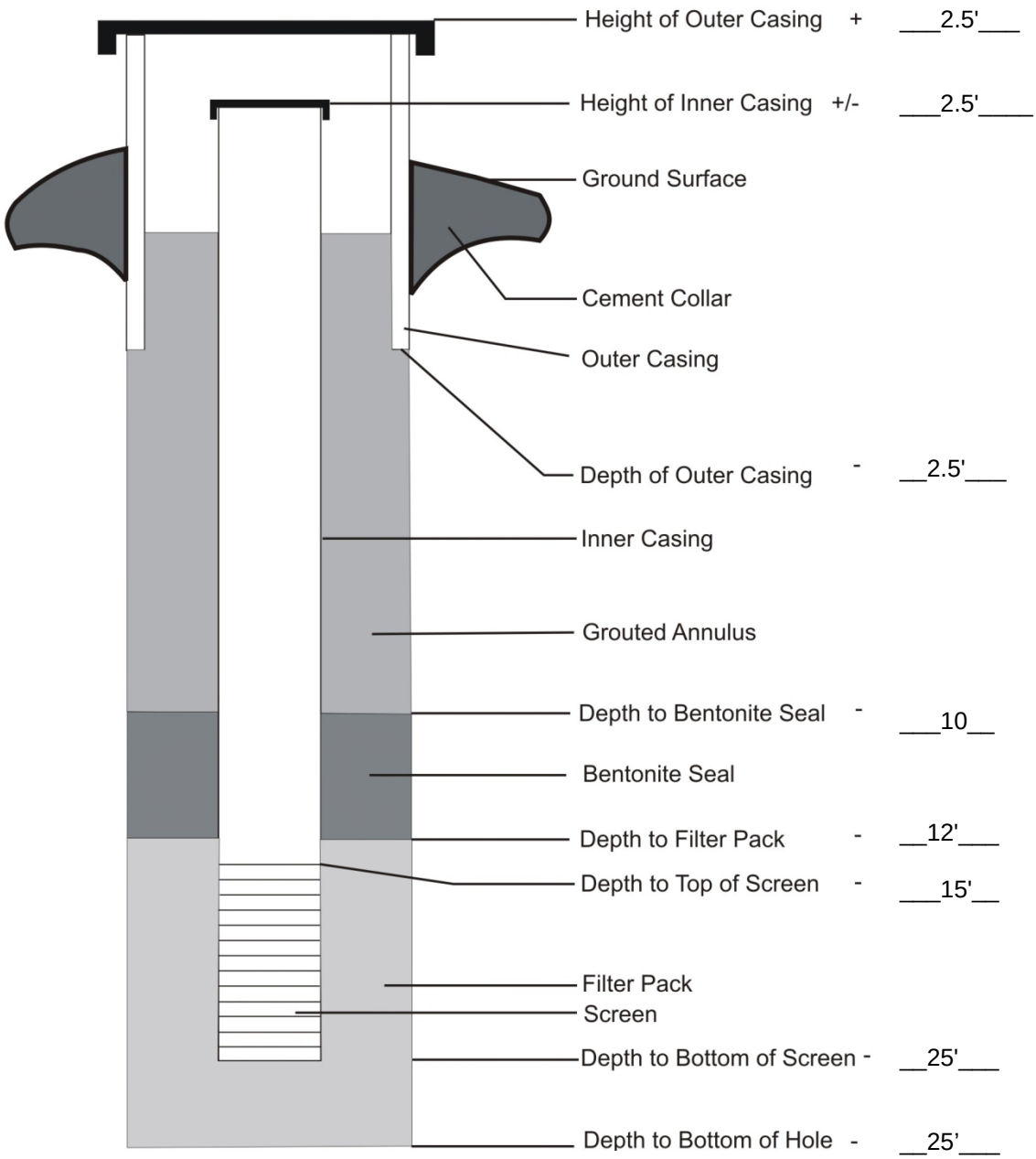

Auger Diameter	4.25”
Borehole Diameter	4.25”
Flush-to-grade Curb Box?	___Yes _X_No
Stick-up Pipe?	_X_Yes ___No
Outer Casing Diameter	4.25"
Outer Casing Material	Steel
Inner Casing Diameter	2”
Inner Casing Material	Schedule 40 PVC
Grout Type	NA
Bentonite Type	Chips
Filter Pack Type	#0 Sand
Screen Type/Slot Size	Schedule 40 PVC, 10 slot

One Civic Center Plaza
Suite 501
Poughkeepsie, NY 12601
(845) 454-2544

Monitoring Well Construction Diagram

Project #: ____560909_____

Project Name/Site: ___Hudson River Psychiatric Center_____

Well #: ___MW-PH-2_____

Location/Coordinates: _____

Geologist: ___ATM_____

Elevation of Ground Surface: _____

Driller: ___GeoLogic_____

Drilling Method:__ Conventional Auger _____

Drilling Fluid: _____

Date Start:____7/23/2014____Date End: ___7/23/2014_____

Depth of Outer Casing (BLS): ___3'_____

Depth of Inner Casing (BLS): ___17'_____

Notes:__ Groundwater encountered at approximately 12' _____

_____

Elevations Relative to Land Surface

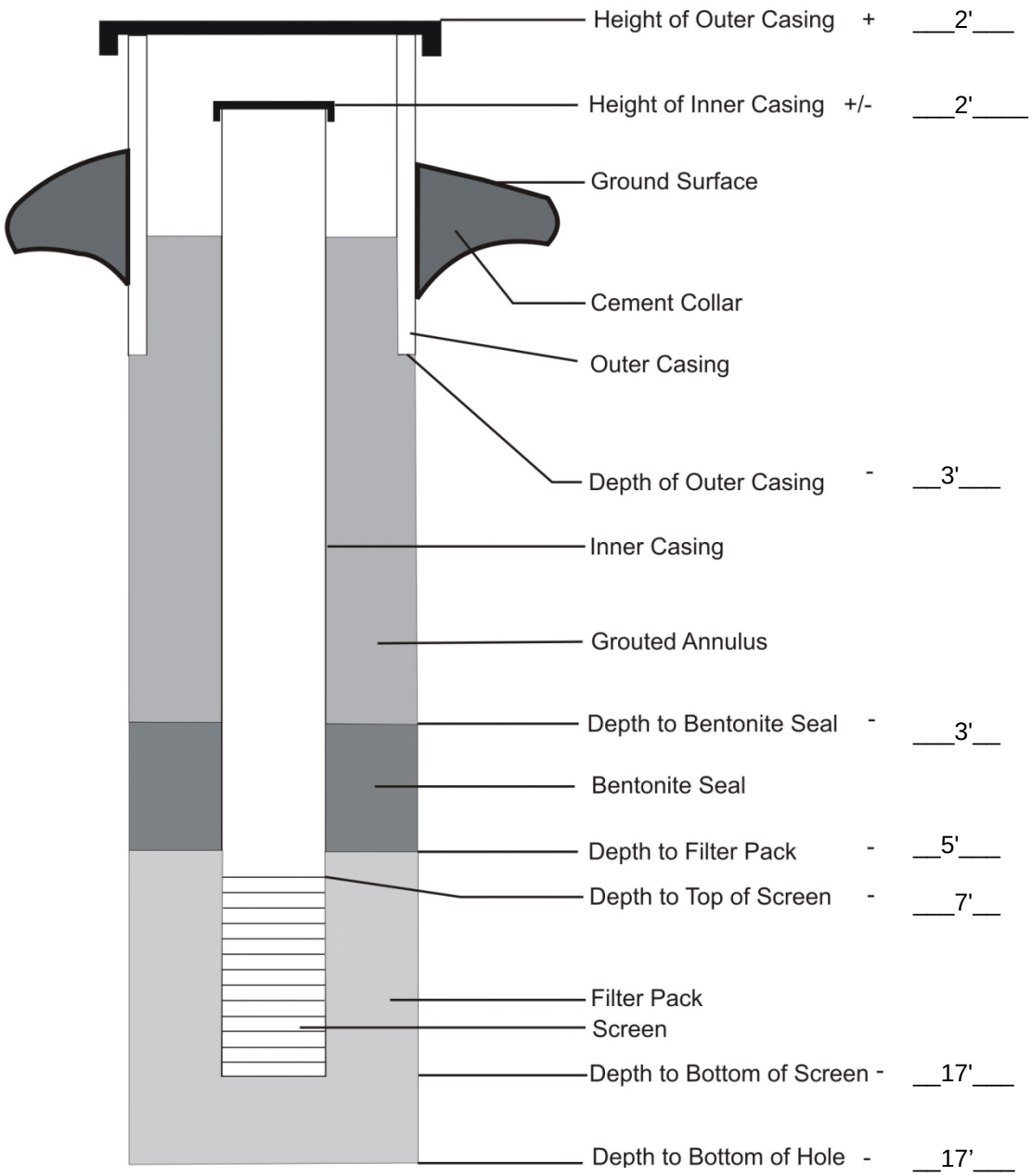

Auger Diameter	4.25”
Borehole Diameter	4.25”
Flush-to-grade Curb Box?	___Yes _X_No
Stick-up Pipe?	_X_Yes ___No
Outer Casing Diameter	4.25"
Outer Casing Material	Steel
Inner Casing Diameter	2”
Inner Casing Material	Schedule 40 PVC
Grout Type	NA
Bentonite Type	Chips
Filter Pack Type	#0 Sand
Screen Type/Slot Size	Schedule 40 PVC, 10 slot

PVE Sheffler

One Civic Center Plaza
Suite 501
Poughkeepsie, NY 12601
(845) 454-2544

Monitoring Well Construction Diagram

Project #: ____560909_____

Project Name/Site: ___Hudson River Psychiatric Center_____

Well #: ___MW-PH-3_____

Location/Coordinates: _____

Geologist: ___ATM_____

Elevation of Ground Surface: _____

Driller: ___GeoLogic_____

Drilling Method:__ Conventional Auger _____

Drilling Fluid: _____

Date Start:____7/23/2014____Date End: ___7/23/2014_____

Depth of Outer Casing (BLS): ___3'_____

Depth of Inner Casing (BLS): ___29'_____

Notes:__ Groundwater encountered at approximately 13' _____

_____

Elevations Relative to Land Surface

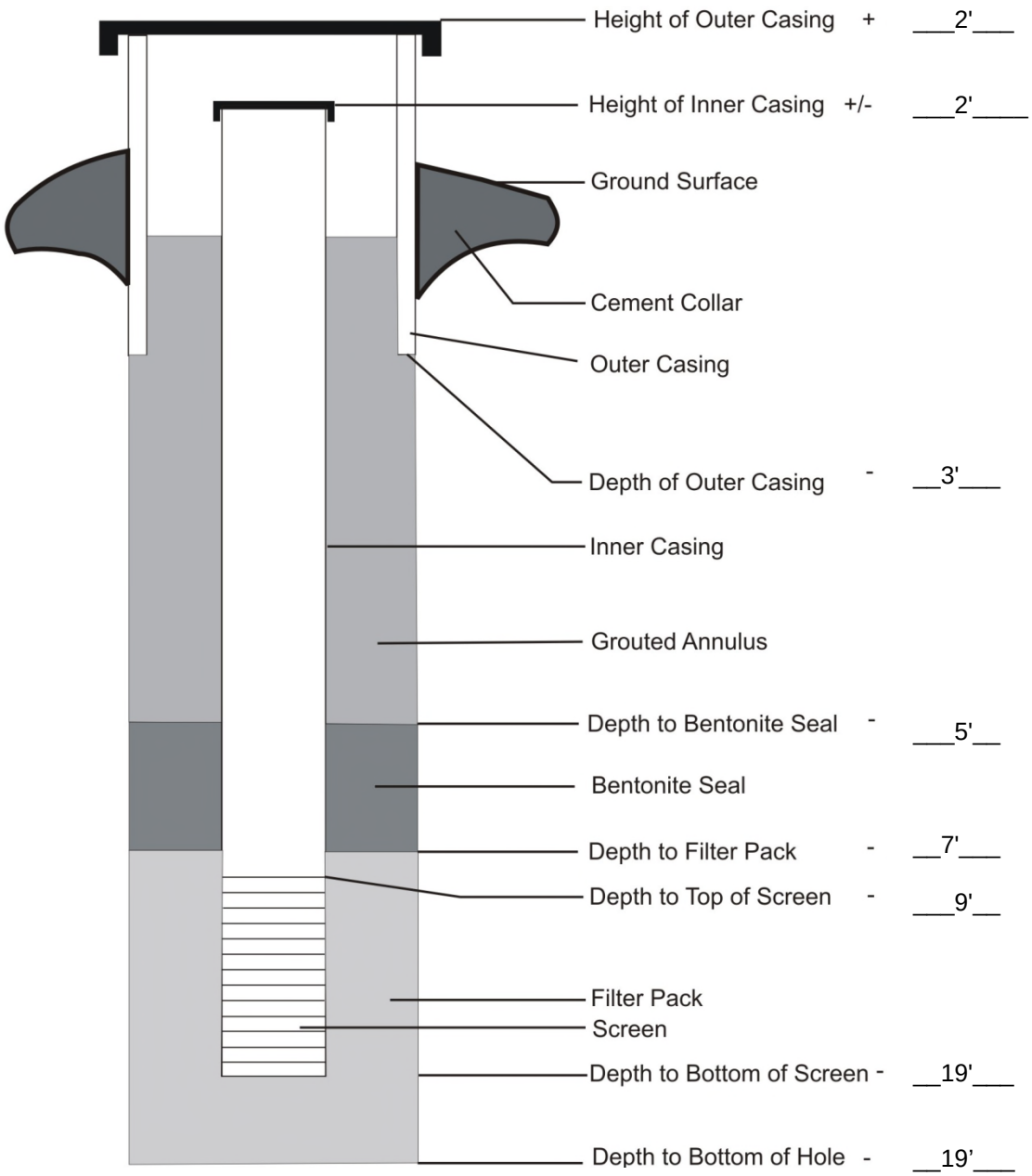

Auger Diameter	4.25”
Borehole Diameter	4.25”
Flush-to-grade Curb Box?	___Yes _X_No
Stick-up Pipe?	_X_Yes ___No
Outer Casing Diameter	4.25"
Outer Casing Material	Steel
Inner Casing Diameter	2”
Inner Casing Material	Schedule 40 PVC
Grout Type	NA
Bentonite Type	Chips
Filter Pack Type	#0 Sand
Screen Type/Slot Size	Schedule 40 PVC, 10 slot

One Civic Center Plaza
Suite 501
Poughkeepsie, NY 12601
(845) 454-2544

Monitoring Well Construction Diagram

Project #: ____560909_____

Project Name/Site: ___Hudson River Psychiatric Center_____

Well #: ___PZ-1_____

Location/Coordinates: _____

Geologist: ___ATM_____

Elevation of Ground Surface: _____

Driller: ___GeoLogic_____

Drilling Method:__ Conventional Auger _____

Drilling Fluid: _____

Date Start:____7/24/2014____Date End: ___7/24/2014_____

Depth of Outer Casing (BLS): ___2.5'_____

Depth of Inner Casing (BLS): ___16.5'_____

Notes:__ Groundwater encountered at approximately 14' _____

_____

Elevations Relative to Land Surface

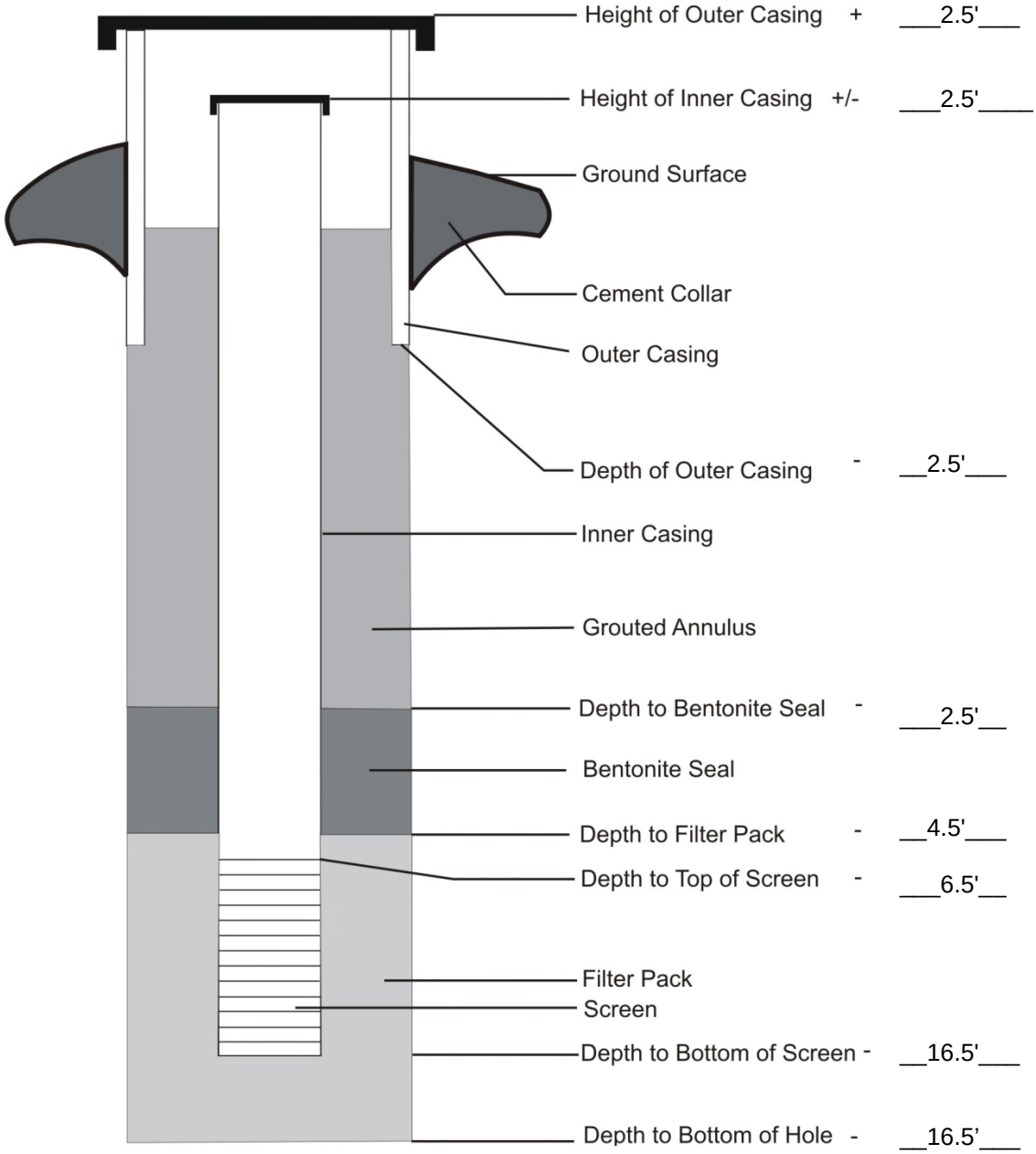

Auger Diameter	4.25”
Borehole Diameter	4.25”
Flush-to-grade Curb Box?	___Yes _X_No
Stick-up Pipe?	_X_Yes ___No
Outer Casing Diameter	4.25"
Outer Casing Material	Steel
Inner Casing Diameter	2”
Inner Casing Material	Schedule 40 PVC
Grout Type	NA
Bentonite Type	Chips
Filter Pack Type	#0 Sand
Screen Type/Slot Size	Schedule 40 PVC, 10 slot

One Civic Center Plaza
Suite 501
Poughkeepsie, NY 12601
(845) 454-2544

Monitoring Well Construction Diagram

Project #: ____560909_____

Project Name/Site: ___Hudson River Psychiatric Center_____

Well #: ___TMW-1R_____

Location/Coordinates: _____

Geologist: ___CBT_____

Elevation of Ground Surface: _____

Driller: ___GeoLogic_____

Drilling Method:__ Geoprobe / Conventional Auger _____

Drilling Fluid: _____

Date Start:____7/22/2014____Date End: ___7/23/2014_____

Depth of Outer Casing (BLS): ___NA_____

Depth of Inner Casing (BLS): ___38.5'_____

Notes:__ Groundwater encountered at approximately 31' _____

_____Re-drilled next to TMW-1 _____

Elevations Relative to Land Surface

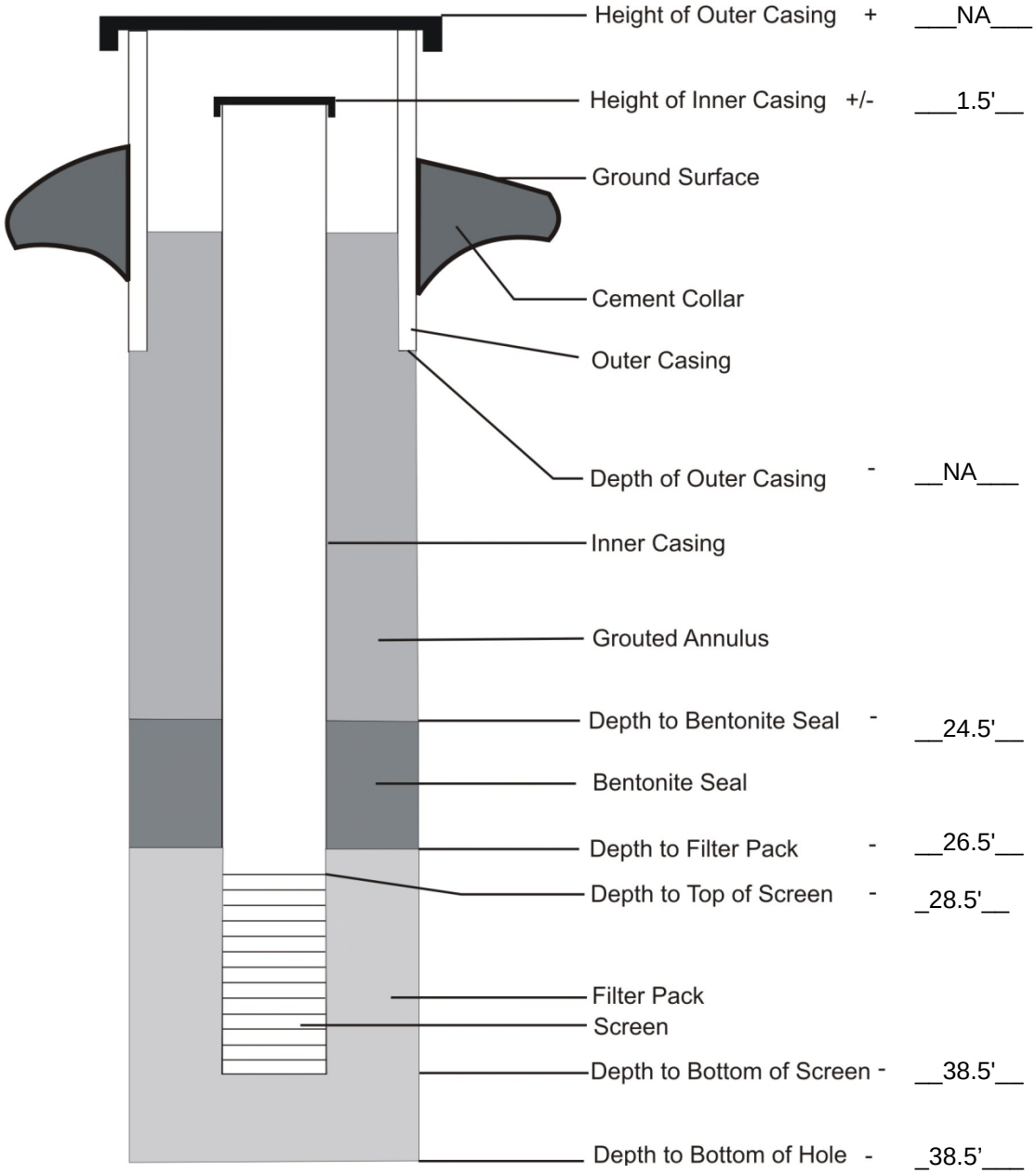

Auger Diameter	4.25”
Borehole Diameter	4.25”
Flush-to-grade Curb Box?	___Yes _X_No
Stick-up Pipe?	_X_Yes ___No
Outer Casing Diameter	NA
Outer Casing Material	NA
Inner Casing Diameter	1”
Inner Casing Material	Schedule 40 PVC
Grout Type	NA
Bentonite Type	Chips
Filter Pack Type	#0 Sand
Screen Type/Slot Size	Schedule 40 PVC, 10 slot

PVE Sheffler

48 Springside Avenue
Poughkeepsie, NY 12603
(845) 454-2544

Monitoring Well Construction Diagram

Project #: _____560909_____

Project Name/Site: ___HRPC_____

Well #: _____MW-MNTC-1_____

Location/Coordinates: _____

Geologist: _____Conor Tarbell_____

Elevation of Ground Surface: _____

Driller: ____GeoLogic_____

Drilling Method:____Hollow Stem Augers_____

Drilling Fluid: _____

Date Start: ___12/16/14_____ Date End: ___12/16/14____

Depth of Outer Casing (BLS): ___2.5'_____

Depth of Inner Casing (BLS): ____20.5'_____

Notes: _____

_____

Elevations Relative to Land Surface

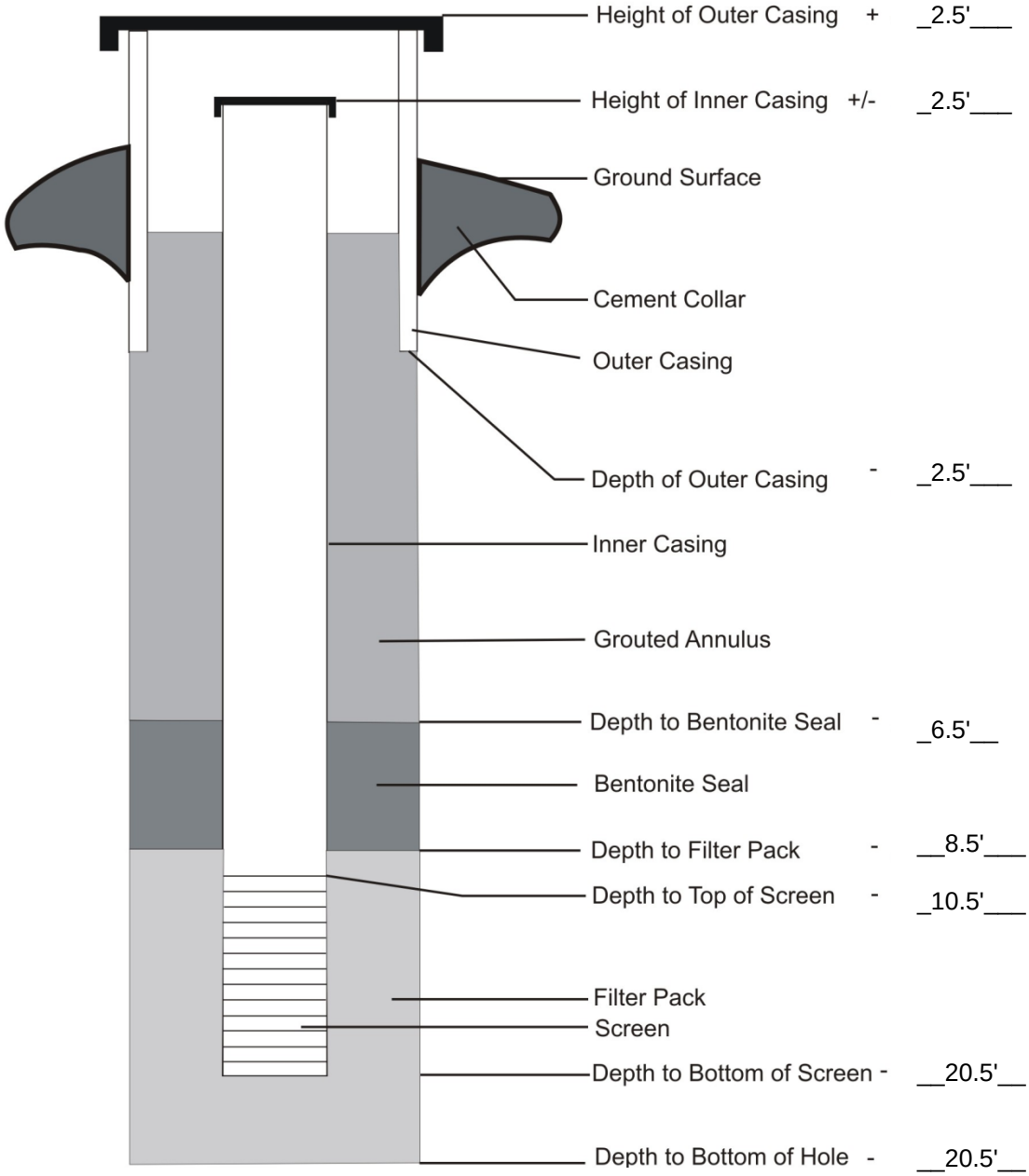

Auger Diameter	4.25"
Borehole Diameter	6"
Flush-to-grade Curb Box?	___Yes _X_No
Stick-up Pipe?	_X_Yes ___No
Outer Casing Diameter	4"
Outer Casing Material	Steel
Inner Casing Diameter	2"
Inner Casing Material	Schedule 40 PVC
Grout Type	
Bentonite Type	Pellet
Filter Pack Type	#1 Sand
Screen Type/Slot Size	10 Slot

PVE Sheffler

48 Springside Avenue
Poughkeepsie, NY 12603
(845) 454-2544

Monitoring Well Construction Diagram

Project #: _____560909_____

Project Name/Site: ___HRPC_____

Well #: _____MW-MRT-1_____

Location/Coordinates: _____

Geologist: _____Conor Tarbell_____

Elevation of Ground Surface: _____

Driller: ____GeoLogic_____

Drilling Method:____Hollow Stem Augers_____

Drilling Fluid: _____

Date Start: ___12/17/14_____ Date End: ___12/17/14____

Depth of Outer Casing (BLS): ___2.5'_____

Depth of Inner Casing (BLS): ____30'_____

Notes: _____

_____

Elevations Relative to Land Surface

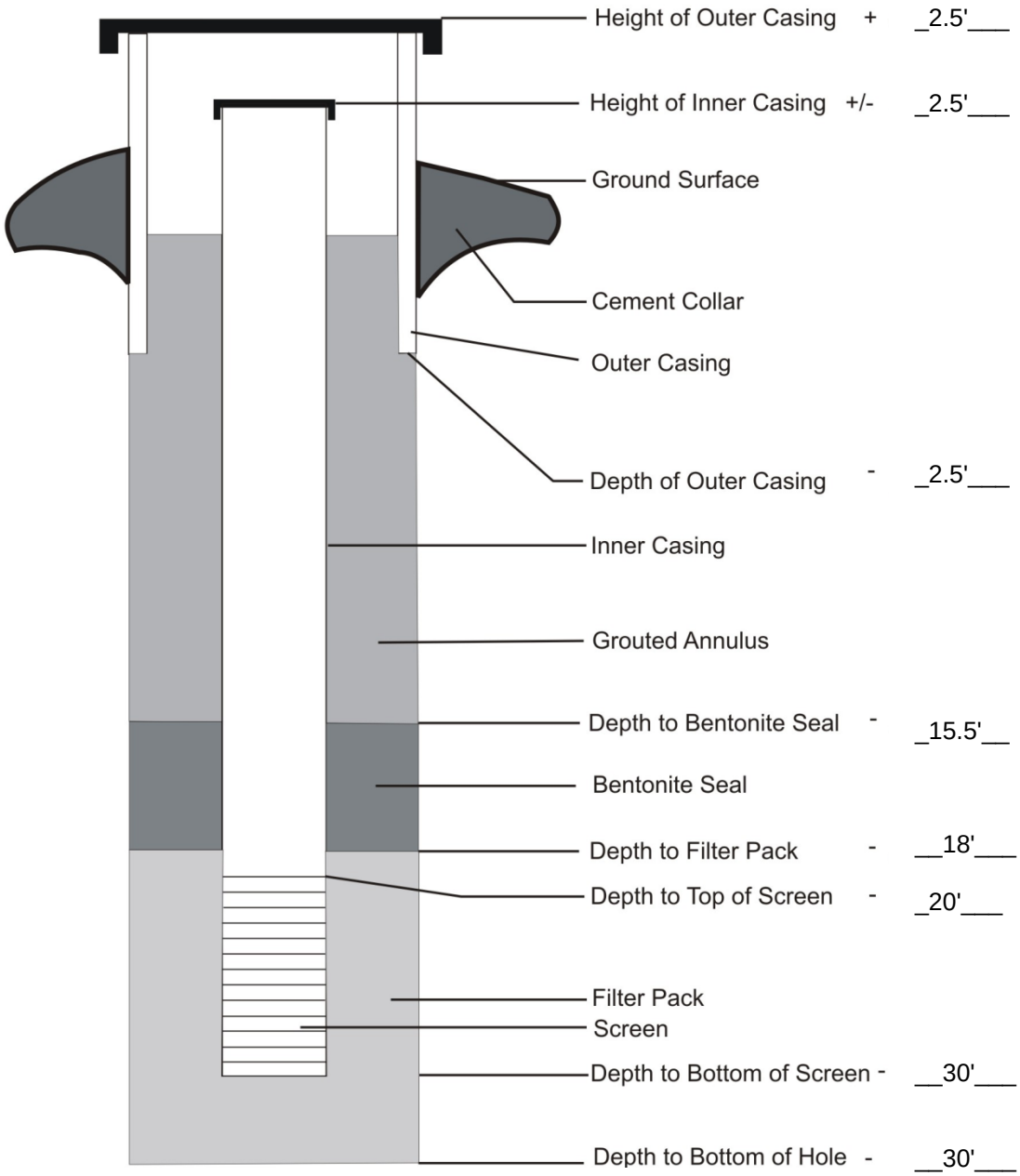

Auger Diameter	4.25"
Borehole Diameter	6"
Flush-to-grade Curb Box?	___Yes _X_No
Stick-up Pipe?	_X_Yes ___No
Outer Casing Diameter	4"
Outer Casing Material	Steel
Inner Casing Diameter	2"
Inner Casing Material	Schedule 40 PVC
Grout Type	
Bentonite Type	Pellet
Filter Pack Type	#1 Sand
Screen Type/Slot Size	10 Slot

Appendix C – Vapor Sampling Logs

VAPOR SAMPLING LOG

Project Name/Address: _____Hudson River Psychiatric Center - North Area BCP, Poughkeepsie, NY _____ PVE Sheffler Project #: _____560909_____

Sampler(s): __Conor Tarbell and Alan Mason _____ Weather: _____Sunny, 80 degrees Fahrenheit_____

NOTES: ____"1a & 1b" refers to duplicate samples -- both canisters were filled concurrently through the same regulator _____

_____

KEY

Location Type:
(A) Sub-slab
(B) Soil vapor probe, pre-fabricated (Product: _____)
(C) Soil vapor probe, field constructed (Describe: _____)

Sampling Method:
(A) 1-L summa canister
(B) 6-L summa canister
(C) Other: _____

Purge Method:
(A) Peristaltic pump set to a flow rate ≤0.2 L/min
(B) PID set to a flow rate ≤0.2 L/min
(C) Other: _____

Apparent Moisture Content of Sampling Zone:
(A) Dry
(B) Moist
(C) Saturated

Sample ID	Location Type	Apparent Moisture	Sample Depth	Sampling Method	Purge Method	Purge Volume	Sample Start Date/Time	Sample End Date/Time	Canister start vacuum	Canister end vacuum
PH-SV-1a & 1b	A	A	2" below slab	A	A	Between 1 and 3 port volumes	7-11-14/11:17	7-11-14/12:52	31" Hg	1" Hg

Analytical Laboratory: _____ Centek Labs _____ Date Shipped to Lab: ____7-17-14____ Delivery Service: _X _FedEx __UPS __Courier

CALCULATING PURGE TIMES FOR SUB-SLAB VAPOR OR SOIL VAPOR SAMPLES

Sample: __PH-SV-1a & 1b_____

Date: ____7-11-14_____

Length of tubing (inches) = ____16_____ inches

divide by 12

Length of tubing (ft) = ___1.33____ ft

X _0.006____ (gal/ft) ←←←←

Tubing Inner Diameter	Volume Per Foot (gal/ft)
1/4"	0.003
3/8"	0.006

1 volume of tubing = _0.007999_ gal

To purge at a rate of 0.2 L/min, which is equivalent to 0.0528344 gal/min….

divide by 0.0528344 gal/min

Time to purge 1 vol. of tubing = 0.1514146_ min

X 60

Time to purge 1 vol. of tubing = _9.08_ sec

X 3

Time to purge 3 vol. of tubing = __27.25__sec

Actual time purged: ___20____sec

VAPOR SAMPLING LOG

Project Name/Address: _____Hudson River Psychiatric Center - North Area BCP, Poughkeepsie, NY _____ PVE Sheffler Project #: _____560909_____

Sampler(s): __Conor Tarbell and Alan Mason _____ Weather: _____Sunny, 80 degrees Fahrenheit_____

NOTES: _____

_____

KEY

Location Type:
(A) Sub-slab
(B) Soil vapor probe, pre-fabricated (Product: _____)
(C) Soil vapor probe, field constructed (Describe: _____)

Sampling Method:
(A) 1-L summa canister
(B) 6-L summa canister
(C) Other: _____

Purge Method:
(A) Peristaltic pump set to a flow rate ≤0.2 L/min
(B) PID set to a flow rate ≤0.2 L/min
(C) Other: _____

Apparent Moisture Content of Sampling Zone:
(A) Dry
(B) Moist
(C) Saturated

Sample ID	Location Type	Apparent Moisture	Sample Depth	Sampling Method	Purge Method	Purge Volume	Sample Start Date/Time	Sample End Date/Time	Canister start vacuum	Canister end vacuum
AG-SV-2	A	A	2” below slab	A	A	Between 1 and 3 port volumes	7-11-14/10:24	7-11-14/12:03	29” Hg	5” Hg

Analytical Laboratory: _____ Centek Labs _____ Date Shipped to Lab: ____7-17-14____ Delivery Service: _X _FedEx __UPS __Courier

CALCULATING PURGE TIMES FOR SUB-SLAB VAPOR OR SOIL VAPOR SAMPLES

Sample: __AG-SV-2_____

Date: ____7-11-14_____

Length of tubing (inches) = ____16_____ inches

divide by 12

Length of tubing (ft) = ___1.33____ ft

X _0.006____ (gal/ft) ←←←←

Tubing Inner Diameter	Volume Per Foot (gal/ft)
1/4"	0.003
3/8"	0.006

1 volume of tubing = _0.007999_ gal

To purge at a rate of 0.2 L/min, which is equivalent to 0.0528344 gal/min….

divide by 0.0528344 gal/min

Time to purge 1 vol. of tubing = 0.1514146_ min

X 60

Time to purge 1 vol. of tubing = _9.08_ sec

X 3

Time to purge 3 vol. of tubing = __27.25__sec

Actual time purged: ___20____sec

VAPOR SAMPLING LOG

Project Name/Address: __Hudson River Psychiatric Center - North Area BCP, Poughkeepsie, NY_____ PVE Sheffler Project #: __560909_____

Sampler(s): ___Stephanie Lewison, Conor Tarbell, Alan Mason_____ Weather: ___Sunny, 80°F_____

NOTES: __"1a & 1b" refers to duplicate samples -- both canisters were filled concurrently through the same regulator. _____

_____

KEY

Location Type:
(A) Sub-slab
(B) Soil vapor probe, pre-fabricated (Product: _____)
(C) Soil vapor probe, field constructed (Describe: _____)

Sampling Method:
(A) 1-L summa canister
(B) 6-L summa canister
(C) Other: _____

Purge Method:
(A) Peristaltic pump set to a flow rate ≤0.2 L/min
(B) PID set to a flow rate ≤0.2 L/min
(C) Other: _____

Apparent Moisture Content of Sampling Zone:
(A) Dry
(B) Moist
(C) Saturated

Sample ID	Location Type	Apparent Moisture	Sample Depth	Sampling Method	Purge Method	Purge Volume	Sample Start Date/Time	Sample End Date/Time	Canister start vacuum	Canister end vacuum
AG-SV-1a & 1b	A	A	2" below slab	A	A	Between 1 and 3 port volumes	7-10-14/11:56	7-10-14/13:00	30" Hg	1" Hg

Analytical Laboratory: _____Centek Labs_____ Date Shipped to Lab: __7-17-14_____ Delivery Service: _X_FedEx __UPS __Courier

CALCULATING PURGE TIMES FOR SUB-SLAB VAPOR OR SOIL VAPOR SAMPLES

Sample: __AG-SV-1a & 1b__

Date: __7-10-14_____

Length of tubing (inches) = ___15_____ inches

divide by 12

Length of tubing (ft) = __1.25_____ ft

X __0.003___ (gal/ft) ←←←←

Tubing Inner Diameter	Volume Per Foot (gal/ft)
1/4"	0.003
3/8"	0.006

1 volume of tubing = __0.00375__ gal

To purge at a rate of 0.2 L/min, which is equivalent to 0.0528344 gal/min….

divide by 0.0528344 gal/min

Time to purge 1 vol. of tubing = _0.07097649___ min

X 60

Time to purge 1 vol. of tubing = __4.25_____ sec

X 3

Time to purge 3 vol. of tubing = __12.7_____sec

Actual time purged: __10__sec

VAPOR SAMPLING LOG

Project Name/Address: _____Hudson River Psychiatric Center - North Area BCP, Poughkeepsie, NY _____ PVE Sheffler Project #: _____560909_____

Sampler(s): __Stephanie Lewison and Alan Mason _____ Weather: _____Sunny, 75 degrees Fahrenheit_____

NOTES: __All of these samples passed helium tracer testing._____

_____

KEY

Location Type:
(A) Sub-slab
(B) Soil vapor probe, pre-fabricated (Product: GeoProbe Systems AT86 six-inch soil vapor implants)
(C) Soil vapor probe, field constructed (Describe: _____)

Sampling Method:
(A) 1-L summa canister
(B) 6-L summa canister
(C) Other: _____

Purge Method:
(A) Peristaltic pump set to a flow rate ≤0.2 L/min
(B) PID set to a flow rate ≤0.2 L/min
(C) Other: _____

Apparent Moisture Content of Sampling Zone:
(A) Dry
(B) Moist
(C) Saturated

Sample ID	Location Type	Apparent Moisture	Sample Depth	Sampling Method	Purge Method	Purge Volume	Sample Start Date/Time	Sample End Date/Time	Canister start vacuum	Canister end vacuum
AG-SV-3	B	A	5' below grade	A	A	Between 1 and 3 port volumes	7-22-14/9:26	7-22-14/11:15	29.5” Hg	3” Hg
AG-SV-4	B	A	5' below grade	A	A	Between 1 and 3 port volumes	7-22-14/9:40	7-22-14/11:30	28” Hg	1” Hg
AG-SV-5	B	A	5' below grade	A	A	Between 1 and 3 port volumes	7-22-14/9:50	7-22-14/11:37	29” Hg	3” Hg
PH-SV-2	B	A	5' below grade	A	A	Between 1 and 3 port volumes	7-22-14/10:09	7-22-14/11:58	30” Hg	4” Hg
PH-SV-3	B	A	5' below grade	A	A	Between 1 and 3 port volumes	7-22-14/10:20	7-22-14/12:03	30” Hg	2.5” Hg
PH-SV-4	B	A	5' below grade	A	A	Between 1 and 3 port volumes	7-22-14/10:30	7-22-14/12:21	30” Hg	5” Hg
PH-SV-5	B	A	5' below grade	A	A	Between 1 and 3 port volumes	7-22-14/10:45	7-22-14/12:06	30” Hg	2” Hg

Analytical Laboratory: _____ Centek Labs _____ Date Shipped to Lab: ____7-23-14____ Delivery Service: _X _FedEx __UPS __Courier

CALCULATING PURGE TIMES FOR SUB-SLAB VAPOR OR SOIL VAPOR SAMPLES

Sample: __AG-SV-3, -4, & -5; PH-SV-2, -3, -4, & -5_____

Date: ____7-22-14_____

Length of tubing (inches) = ____84_____ inches

divide by 12

Length of tubing (ft) = ___7____ ft

X _0.000637_ (gal/ft) ←←←←

Tubing Inner Diameter	Volume Per Foot (gal/ft)
1/4"	0.003
3/8"	0.006
1/8"	0.000637

1 volume of tubing = _0.004459_ gal

To purge at a rate of 0.2 L/min, which is equivalent to 0.0528344 gal/min….

divide by 0.0528344 gal/min

Time to purge 1 vol. of tubing = _0.084_ min

X 60

Time to purge 1 vol. of tubing = _5_ sec

X 3

Time to purge 3 vol. of tubing = __15__sec

Actual time purged: ___10____sec

VAPOR SAMPLING LOG

Project Name/Address: __HRPC_____ PVE Sheffler Project #: _____560909_____

Sampler(s): ____Alan Mason_____ Weather: _____

NOTES: _____

_____

KEY

Location Type:
(A) Sub-slab
(B) Soil vapor probe, pre-fabricated (Product: ____GeoProbe Steel Vapor Point_____)
(C) Soil vapor probe, field constructed (Describe: _____)

Sampling Method:
(A) 1-L summa canister
(B) 6-L summa canister
(C) Other: _____

Purge Method:
(A) Peristaltic pump set to a flow rate ≤0.2 L/min
(B) PID set to a flow rate ≤0.2 L/min
(C) Other: _____

Apparent Moisture Content of Sampling Zone:
(A) Dry
(B) Moist
(C) Saturated

Sample ID	Location Type	Apparent Moisture	Sample Depth	Sampling Method	Purge Method	Purge Volume	Sample Start Date/Time	Sample End Date/Time	Canister start vacuum	Canister end vacuum
SV-3	C	A	5'	A	A	1-3 well volumes.	12/23/14 0910	12/23/14 1105	30"	2"
SV-4	C	A	5'	A	A	1-3 well volumes.	12/23/14 0925	12/23/14 1115	30"	3"
SV-5	C	A	5'	A	A	1-3 well volumes.	12/23/14 0945	12/23/14 1130	28"	4"
SV-6	C	A	5'	A	A	1-3 well volumes.	12/23/14 1010	12/23/14 1200	29"	4"
SV-7	C	A	5'	A	A	1-3 well volumes.	12/23/14 1100	12/23/14 1145	30"	5"

Analytical Laboratory: _____Centek Lab_____ Date Shipped to Lab: ____12/30/14_____ Delivery Service: __FedEx __UPS _X_Courier

CALCULATING PURGE TIMES FOR SUB-SLAB VAPOR OR SOIL VAPOR SAMPLES

Sample: ____All Samples Above_____

Date: ____12/23/14_____

Length of tubing (inches) = ____72___ inches

divide by 12

Length of tubing (ft) = ___6___ ft

X __0.003____ (gal/ft) ←←←

Tubing Inner Diameter	Volume Per Foot (gal/ft)
1/4"	0.003
3/8"	0.006
1/8"	0.000637

1 volume of tubing = ___0.018____ gal

To purge at a rate of 0.2 L/min, which is equivalent to 0.0528344 gal/min….

divide by 0.0528344 gal/min

Time to purge 1 vol. of tubing = ___0.34____ min

X 60

Time to purge 1 vol. of tubing = ___20____ sec

X 3

Time to purge 3 vol. of tubing = ___60_____sec

Actual time purged = ___40____sec

VAPOR SAMPLING LOG

Project Name/Address: __HRPC_____ PVE Sheffler Project #: _____560909_____

Sampler(s): ____Alan Mason_____ Weather: _____

NOTES: _____

_____

KEY

Location Type:
(A) Sub-slab
(B) Soil vapor probe, pre-fabricated (Product: ____GeoProbe Steel Vapor Point_____)
(C) Soil vapor probe, field constructed (Describe: _____)

Sampling Method:
(A) 1-L summa canister
(B) 6-L summa canister
(C) Other: _____

Purge Method:
(A) Peristaltic pump set to a flow rate ≤0.2 L/min
(B) PID set to a flow rate ≤0.2 L/min
(C) Other: _____

Apparent Moisture Content of Sampling Zone:
(A) Dry
(B) Moist
(C) Saturated

Sample ID	Location Type	Apparent Moisture	Sample Depth	Sampling Method	Purge Method	Purge Volume	Sample Start Date/Time	Sample End Date/Time	Canister start vacuum	Canister end vacuum
SV-3	C	A	5'	A	A	1-3 well volumes.	12/23/14 0910	12/23/14 1105	30"	2"
SV-4	C	A	5'	A	A	1-3 well volumes.	12/23/14 0925	12/23/14 1115	30"	3"
SV-5	C	A	5'	A	A	1-3 well volumes.	12/23/14 0945	12/23/14 1130	28"	4"
SV-6	C	A	5'	A	A	1-3 well volumes.	12/23/14 1010	12/23/14 1200	29"	4"
SV-7	C	A	5'	A	A	1-3 well volumes.	12/23/14 1100	12/23/14 1145	30"	5"

Analytical Laboratory: _____Centek Lab_____ Date Shipped to Lab: ____12/30/14_____ Delivery Service: __FedEx __UPS _X_Courier

CALCULATING PURGE TIMES FOR SUB-SLAB VAPOR OR SOIL VAPOR SAMPLES

Sample: ____All Samples Above_____

Date: ____12/23/14_____

Length of tubing (inches) = ____72___ inches

divide by 12

Length of tubing (ft) = ___6___ ft

X __0.003____ (gal/ft) ←←←

Tubing Inner Diameter	Volume Per Foot (gal/ft)
1/4"	0.003
3/8"	0.006
1/8"	0.000637

1 volume of tubing = ___0.018____ gal

To purge at a rate of 0.2 L/min, which is equivalent to 0.0528344 gal/min….

divide by 0.0528344 gal/min

Time to purge 1 vol. of tubing = ___0.34____ min

X 60

Time to purge 1 vol. of tubing = ___20____ sec

X 3

Time to purge 3 vol. of tubing = ___60_____sec

Actual time purged = ___40____sec

VAPOR SAMPLING LOG

Project Name/Address: __HRPC_____ PVE Sheffler Project #: _____560909_____

Sampler(s): ____Alan Mason_____ Weather: _____

NOTES: _____

_____

KEY

Location Type:
(A) Sub-slab
(B) Soil vapor probe, pre-fabricated (Product: ____GeoProbe Steel Vapor Point_____)
(C) Soil vapor probe, field constructed (Describe: _____)

Sampling Method:
(A) 1-L summa canister
(B) 6-L summa canister
(C) Other: _____

Purge Method:
(A) Peristaltic pump set to a flow rate ≤0.2 L/min
(B) PID set to a flow rate ≤0.2 L/min
(C) Other: _____

Apparent Moisture Content of Sampling Zone:
(A) Dry
(B) Moist
(C) Saturated

Sample ID	Location Type	Apparent Moisture	Sample Depth	Sampling Method	Purge Method	Purge Volume	Sample Start Date/Time	Sample End Date/Time	Canister start vacuum	Canister end vacuum
MRT-SV-1	C	A	5'	A	A	1-3 well volumes.	12/23/14 1035	12/23/14 1235	30"	4"
MNTC-SV-1	C	A	5'	A	A	1-3 well volumes.	12/23/14 1020	12/23/14 1230	30"	5"
FD-SV-1	C	A	5'	A	A	1-3 well volumes.	12/23/14 0810	12/23/14 0950	28"	1"
SV-1 DUP-SV-1	C	A	5'	A	A	1-3 well volumes.	12/23/14 0835	12/23/14 1000	29"	4"
SV-2	C	A	5'	A	A	1-3 well volumes.	12/23/14 0855	12/23/14 1040	30"	5"

Analytical Laboratory: _____Centek Lab_____ Date Shipped to Lab: ____12/30/14_____ Delivery Service: __FedEx __UPS _X_Courier

CALCULATING PURGE TIMES FOR SUB-SLAB VAPOR OR SOIL VAPOR SAMPLES

Sample: ____All Samples Above_____

Date: ____12/23/14_____

Length of tubing (inches) = ____72___ inches

divide by 12

Length of tubing (ft) = ___6___ ft

Tubing Inner Diameter	Volume Per Foot (gal/ft)
1/4"	0.003
3/8"	0.006
1/8"	0.000637

X __0.003____ (gal/ft) ←←←←

1 volume of tubing = ___0.018____ gal

To purge at a rate of 0.2 L/min, which is equivalent to 0.0528344 gal/min….

divide by 0.0528344 gal/min

Time to purge 1 vol. of tubing = ___0.34____ min

X 60

Time to purge 1 vol. of tubing = ___20____ sec

X 3

Time to purge 3 vol. of tubing = ___60_____sec

Actual time purged = ___40____sec

VAPOR SAMPLING LOG

Project Name/Address: __Hudson River Psychiatric Center – North Area BCP, Poughkeepsie, New York_ PVE Sheffler Project #: _____560909_____

Sampler(s): __Conor Tarbell and Stephanie Lewison_____ Weather: _____85 Degrees and Sunny_____

NOTES: _____All of these samples passed helium tracer testing. _____

_____

KEY

Location Type:
(A) Sub-slab
(B) Soil vapor probe, pre-fabricated (Product: _____)
(C) Soil vapor probe, field constructed (Describe: _____)

Sampling Method:
(A) 1-L summa canister
(B) 6-L summa canister
(C) Other: _____

Purge Method:
(A) Peristaltic pump set to a flow rate ≤0.2 L/min
(B) PID set to a flow rate ≤0.2 L/min
(C) Other: _____

Apparent Moisture Content of Sampling Zone:
(A) Dry
(B) Moist
(C) Saturated

Sample ID	Location Type	Apparent Moisture	Sample Depth	Sampling Method	Purge Method	Purge Volume	Sample Start Date/Time	Sample End Date/Time	Canister start vacuum	Canister end vacuum
AG-SV-3	B	A	5' below grade	A	A	Between 1 and 3 port volumes	9-2-2014/ 11:36	9-2-2014/ 13:39	30"	1"
AG-SV-4	B	A	5' below grade	A	A	Between 1 and 3 port volumes	9-2-2014/ 11:58	9-2-2014/ 13:50	30"	2"
PH-SV-2	B	A	5' below grade	A	A	Between 1 and 3 port volumes	9-2-2014/ 12:09	9-2-2014/ 13:58	30"	2"

Analytical Laboratory: __Centek Labs_____ Date Shipped to Lab: __9-2-2014_____ Delivery Service: _X _FedEx __UPS __Courier

CALCULATING PURGE TIMES FOR SUB-SLAB VAPOR OR SOIL VAPOR SAMPLES

Sample: __AG-SV-3, -4 & PH-SV-2__

Date: __9-2-2014_____

Length of tubing (inches) = ___84___ inches

divide by 12

Length of tubing (ft) = __7___ ft

X _0.000637_ (gal/ft) ←←←←

Tubing Inner Diameter	Volume Per Foot (gal/ft)
1/4"	0.003
3/8"	0.006
1/8"	0.000637

1 volume of tubing = _0.004459_ gal

To purge at a rate of 0.2 L/min, which is equivalent to 0.0528344 gal/min….

divide by 0.0528344 gal/min

Time to purge 1 vol. of tubing = ___0.084___ min

X 60

Time to purge 1 vol. of tubing = __5_____ sec

X 3

Time to purge 3 vol. of tubing = __15_____sec

Actual time purged = __10____sec

Appendix D – Test Pit Captioned Photos

Test Pit TP-1, view to the north. 4-24-14

Test Pit TP-1, view to the east. 4-24-14.

Test Pit TP-1, view to northeast. 4-24-14.

Test Pit TP-2, view to the north. 4-24-14.

Test Pit TP-2, sidewall. 4-24-14.

Test Pit TP-2, sidewall. 4-24-14.

Test Pit TP-3, view of sidewall to northeast. 4-24-14

.

Test Pit TP-3, view of sidewall to northeast. 4-24-14.

Test Pit TP-3, view of sidewall to northeast. 4-24-14.

Test Pit TP-4, view to southwest. 4-24-14.

Test Pit TP-5, view to north. 4-25-14.

Test Pit TP-5, view to northwest. 4-25-14.

Test Pit TP-5, view to northwest and unearthed manhole. 4-25-14.

Test Pit TP-6, view to northeast. 4-25-14.

Test Pit TP-6, view to northwest. 4-25-14.

Test Pit TP-6, view to northeast. 4-25-14.

Test Pit TP-7, view to west. 4-25-14.

Test Pit TP-8, view to east. 4-25-14.

Test Pit TP-8, view to north. 4-25-14.

Test Pit TP-8, view to northwest. 4-25-14.

Test Pit TP-9, view to east. 4-25-14.

Test Pit TP-10, view to north. 4-25-14.

Test Pit TP-10, view to northeast. 4-25-14.

Test Pit TP-11, view to north. 5-02-14.

Test Pit TP-12 West, view to south. 5-02-14.

Test Pit TP-12 West, view to southeast. 5-02-14.

Test Pit TP-12 South, view to south. 5-02-14.

Test Pit TP-12 South, view to southwest. 5-02-14.

Test Pit TP-12 South. View to the south of the south wall. 5-2-14.

Test Pit TP-12 South. View to the south. 5-2-14.

Test Pit TP-12 East. View to the north. 5-2-14.

Test Pit TP-12 East. View to the southeast of the southern and eastern walls of excavation. 5-2-14.

Test Pit TP-12 East. View to the east. 5-2-14.

Test Pit TP-13. View to the northwest. 5-2-14.

Test Pit TP-13. View to the northwest. Reaching native soil. 5-2-14.

Test Pit TP-13. View to the northwest. Reaching native soil. 5-2-14.

Test Pit TP-13. View to the northwest. Extending test pit to the north. 5-2-14.

Test Pit TP-14. Coal ash and brick fill above light brown native soil.

Test Pit TP-14. Pipe encountered in trench.

Appendix E – Disposal Receipt for Car Wash OWS Tank

BUCKNER OIL SERVICE
AND INDUSTRIAL TANK CLEANING INC.

P.O. Box 4053, New Windsor, NY 12553 DEC #3A-034
Phone (845) 534-4259 • Fax (845) 534-8208

№ 5636

4.25 20 14

PVE SHEFFLER
ONE WHITE CENTER PLAZA Suite 501
POUGHKEEPSIE

GALLONS		PRICE	
700	GALLONS OF WASTE OIL		
	AND WATER 3/25 PER.		
	GALLON DISPOSAL	$ 875.	00
	$125.00 PER HOUR VAC		
	TRUCK & FUEL 3 HRS.	$ 375.	00
	HALOGEN TEST 200 GRM.		
	TAX	101.	56
	AMERICAN EXPRESS #		
	3727 377302 61002		
	07/17		
		$ 1351.	56

Certification Form

I hereby certify that to the best of my knowledge the waste and/or used engine lubricating oil being transferred to Buckner Waste Oil Service & Industrial Tank Cleaning Inc. from my possession does not contain PCB's, Lead, or other materials in levels that exceed those for hazardous waste.

Print Name Connor Tardell

Signature Connor Tardell

Appendix F – Data Validator Resume and SOQ

Resume

Kenneth R. Applin, Ph.D.

KR Applin and Associates
8806 Route 256
Dansville, NY 14437
585.335.5998

EDUCATION

Ph.D., Geochemistry and Mineralogy
The Pennsylvania State University
Area of Emphasis: aqueous geochemistry
Related Areas of Study: hydrogeology, chemistry
Degree Granted: 1982

M.S., Geochemistry and Mineralogy
The Pennsylvania State University
Area of Emphasis: aqueous geochemistry
Related Areas of Study: hydrogeology, radionuclide geochemistry, computer programming
Degree Granted: 1978

B.A., Geological Sciences
State University of New York at Geneseo
Area of Emphasis: geological sciences
Related Areas of Study: physics, biology, chemistry, computer science
Degree Granted: 1974

PROFESSIONAL EXPERIENCE

1993 - present
KR Applin & Associates
Professional consultant in geochemistry, hydrogeology, and geology. Experienced in landfill closure investigations, groundwater and surface water monitoring at solid and hazardous waste sites, hydrogeologic investigations, data validation, and environmental consultant to law firms.

1993 - 1994
Adjunct Lecturer, State University of New York at Geneseo
Served as Adjunct Lecturer with the Dept. of Geological Sciences. Developed and taught Environmental Geology. Supervised undergraduate research in surface water geochemistry and the environmental chemistry of lead.

1989-1993
Chief Hydrogeologist and Geochemist, Larsen Engineers, Rochester, NY
Managed all projects involving environmental and hydrogeologic investigations including landfill siting and closure investigations, hazardous waste site investigations, environmental assessments for property transactions, underground storage tank investigations, and water supply studies.

PROFESSIONAL EXPERIENCE (Continued)

1982-1989
Assistant Professor of Geology, University of Missouri-Columbia, MO
Served as professor and research scientist for the Dept. of Geology. Taught undergraduate and graduate courses in geology, hydrogeology, and geochemistry. Supervised undergraduate and graduate student research in the Depts. of Geology, Civil Engineering, and Chemistry. Conducted research in groundwater geochemistry, mineralogy, and sedimentology.

1975-1982
Graduate Research Assistant, The Pennsylvania State University
Conducted research on uranium geochemistry and global geochemical cycles. Performed field sampling and laboratory analyses of water using wet chemistry methods, atomic absorption spectrophotometry (AAS), ICP emission spectrophotometry, neutron activation analysis, colorimetry, and x-ray fluorescence. Served as instructor with the Penn State Marine Science Program at Wallops Is., VA. Served as advisor to the U.S. Bureau of Mines on uranium solution mining project in Casper, WY. Developed computer software for interpreting natural water geochemistry.

PROFESSIONAL AFFILIATIONS

Association of Groundwater Scientists and Engineers

CONTINUING EDUCATION

40-Hour OSHA Health and Safety Training (29 CFR 1910.120)
Environmental Protection Training, Inc
Pittsburgh, PA
September 1992

Inorganic Data Validation Course
SUNY Westchester Community College
Valhalla, NY
March 1994

Organic Data Validation Course
SUNY Westchester Community College
Valhalla, NY
November 1993

Bioremediation Technology Seminar
Waste Stream Technology, Inc.
Buffalo, NY
August 1992

Local Land Use Decision Making Training Program
Monroe County Planning Council
Rochester, NY
Fall 1994

Communicating Environmental Risks
Center for Environmental Information
Rochester, NY
June 1990

Survey Course in Environmental Law
Center for Environmental Information
Rochester, NY
April/May 1990

REPRESENTATIVE PROJECTS

Closure investigation and post-closure environmental monitoring of the Town of Arcadia Landfill, Wayne County, NY (1994 - present)

Closure investigation and post-closure environmental monitoring of the Galen-Lyons Landfill, Wayne County, NY (1994 - present)

Closure investigation and post-closure environmental monitoring of the Town of Wolcott Landfill, Wayne County, NY (1995 - present)

Closure investigation for Town of Ontario Landfill, Monroe County, NY (2004-2006)

Remedial Investigation/Feasibility Study (RI/FS) Workplan and Citizen Participation Plan (CPP) for the Brockport Landfill Inactive Hazardous Waste Site, Monroe County, NY (1993)

Post-closure data validation and trend analysis for the Brockport Landfill Inactive Hazardous Waste Site, Monroe County, NY (2001 - present)

Preparation of Site Analytical Plan (SAP) for Seneca Meadows Landfill Expansion, Seneca Falls, NY (1996 and 2006)

Preparation of Site Analytical Plan (SAP) for Lockwood Landfill, Dresden, NY (February 2007)

Preparation of quarterly groundwater and surface water monitoring reports, Seneca Meadows Landfill, Seneca Falls, NY (1995 - present)

Preparation of Chemical Data Acquisition Plan (CDAP) for Interim Corrective Measures, Old Sanitary Landfill, Fort Drum, NY (1994)

Westchester Community College

Professional Development Center

Awards this Certificate of Achievement To

KENNETH APPLIN

for Successfully Completing

Inorganic Data Validation Course (35 hours)
Instructor: John M Rankin, Jr.

Date March 11, 1994

Assistant Dean
Professional Development Center

President

The Professional Development Center

SUNY
WESTCHESTER COMMUNITY COLLEGE
Valhalla, New York 10595

Westchester Community College

Professional Development Center

Awards this Certificate of Achievement To

KEN APPLIN

for Successfully Completing

ORGANIC DATA VALIDATION

Instructor: Dr. John Samuelian

Date November 1993

Assistant Dean
Professional Development Center

President

The Professional Development Center

SUNY
WESTCHESTER COMMUNITY COLLEGE
Valhalla, New York 10595

Statement of Qualifications

KR Applin and Associates
8806 Route 256
Dansville, NY 14437

INTRODUCTION

KR Applin and Associates is a small, sole proprietor consulting business that specializes in aqueous geochemistry and also provides limited services in the fields of hydrogeology and geology. The business was established in 1992 by Kenneth R. Applin, Ph.D., whose prior work experience includes serving as Assistant Professor of Geology at the University of Missouri-Columbia and as Chief Hydrogeologist and Geochemist with a leading engineering firm in Rochester, New York.

KR Applin and Associates provides expert consulting services in matters dealing primarily with the assessment of groundwater and surface water quality. In recent years, the business has focused on the evaluation of water quality surrounding operating and closed solid waste landfills. These evaluations include the application of various hydrogeologic, geochemical, and statistical methods for determining impacts to natural water quality. Kenneth Applin is also a certified data validator and has provided data validation services to a variety of contractors and laboratories performing environmental investigations and remediation projects.

EDUCATION

Ph.D., 1982
Geochemistry and Mineralogy
The Pennsylvania State University

M.S., 1978
Geochemistry and Mineralogy
The Pennsylvania State University

B.A., 1974
Geological Sciences
The State University of New York at Geneseo

CERTIFICATIONS

Organic Data Validation
Westchester Community College, Valhalla, NY
November 1993

Inorganic Data Validation
Westchester Community College, Valhalla, NY
March 1994

* Courses approved by USEPA, Region II

RECENT REPRESENTATIVE PROJECTS

KR Applin has provided data validation services and Data Usability Summary Reports (DUSRs) for brownfield investigations and hazardous waste remediation projects conducted by the following firms in NYSDEC Regions 2, 8, and 9:

AFI Environmental, Inc.
Niagara Falls, NY

Panamerican Environmental, Inc.
Buffalo, NY

Passero Associates
Rochester, NY

Larsen Engineers
Rochester, NY

Brinkerhoff Environmental
Manasquan, NJ