CONSTRUCTION BID AND CONTRACT FOR
ARLINGTON WASTEWATER TREATMENT PLANT UPGRADE
TOWN OF POUGHKEEPSIE

APRIL 8, 2016

---

NOTE: This Addendum forms a part of the contract documents. Acknowledge receipt of this addendum in the appropriate location on the bid.

**GENERAL**

The bid opening date has been revised to 11:00 AM local time on April 21, 2016.

The majority of comments received as of 7 working days prior to the original bidding opening date have been incorporated into this addendum, which was the cutoff date for all comments to be received. A separate 3rd addendum will be developed regarding revisions to the proposed centrifuge layout and remaining responses.

The following are contacts for the Town of Poughkeepsie: Steven Segna, Arlington STP Operations Project Manager, SUEZ, (845) 463-3026; Franco Zani, Superintendent of Sewers, (845) 462-2280; Keith Ballard, Town of Poughkeepsie Water Department Managing Operator, (845) 462-6535. Included with this addendum is the current SPDES permit for the facility, which expires in 2017. In terms of operations, it is noted that the highest peak influent flow rate recorded at the plan was during Hurricane Irene, with a rate exceeding 11 MGD. It has been noted that the plant can be temporarily operated with one primary settling tank can be out of service (Note that smaller tanks # 3&4 are equal to one larger tank out of service). Additionally, it has been noted that the plant can be temporarily operated with one aeration tank, one contact tank and one final settling tank out of service. The Contractor shall be responsible for ensuring that all work performed shall allow for the wastewater treatment facility to remain operational throughout construction and meet all SPDES permit requirements, including but not limited to: providing all necessary temporary pumping, temporary piping, temporary blowers, dewatering and cleaning of tanks.

The General Contractor shall be responsible for providing a temporary sludge processing unit to replace the belt filter press when this unit is removed and prior to the proposed centrifuge unit being approved for operation. The General Contractor shall also be responsible for paying any increased sludge treatment and disposal costs during this time. The Owner will waive these requirements between the periods of January 1 to March 31, 2017 and will pay for any additional sludge disposal costs during this period of time. The general contractor is encouraged to schedule this work during the period of January 1, 2017 through March 31, 2017, when sludge production rates are at their lowest.

---

## PLANS

**Drawings C-5 C-6, C-7 and C-8, Partial Site Plans and Partial Utility Plans**
Delete: Drawings C-5, C-6, C-7 and C-8

and Insert: Drawings C-5, C-6, C-7 and C-8, as included in this addendum.

Clarifications: The updated plans note the revised proposed water line and water meter pit locations, along with the recently installed underground gas and electric lines. The previously existing LP storage tank has now been removed and no longer needs to be relocated. The water line connection location labeled as being installed by the Town of Poughkeepsie is scheduled to be completed prior to the Notice of Proceed being generated for this project.

**Drawing C-10 Water Line Profile**
Delete: Drawing C-10

and Insert: Meter Pit Miscellaneous Detail sheet, as included in this addendum.

**Drawing C-12, Miscellaneous Details - 2 Clarifications:**
Detail 3-C12: MH 5 ID shall be 5' (60")
Detail 11-C12, 12-C12: Typical MH ID shall be 5' (60") U.N.O.

**Drawing C-13, Miscellaneous Details - 3 Clarifications:**
Detail 2-C13 MH 7 ID shall be 8' (96") MH 7 is a Dog House Manhole set on the 11' x 11' pad shown
Detail 8-C13 MH 1 ID shall be 8' (96")

**Drawing G-5, Headworks Building Plans, Floor Plan 3/G-5:**
Delete: "42" high stainless steel handrail and support posts."

And Insert: "42" high aluminum handrail and support posts."

**Drawing G-6, Headworks Building Elevation and Sections, Elevation 1/G-6:**
Clarification: Add Detail of Gable End Wall Construction, as included in this addendum.

**Drawing G-9, Headworks Building Concrete Details - 2, Detail 6/G-9:**
Delete: Detail 6 – 8" CMU to Truss Roof Connection.

And Insert: Detail 6 – 8" CMU to Truss Roof Connection, as included in this addendum.

**Drawing G-10, Headworks Building Details, Stair Tread Detail 3/G-10:**
Clarification: The angles and stair tread shall be galvanized steel in accordance with specification 05511 Metal Stairs.

**Drawing G-11, Interior Finish Schedule – Clarifications:**
Interior Finish Schedule (Headworks Building): The north wall, east wall and south wall of the general and electric area and the west wall of the general area referenced as a split faced finish shall be replaced with CMU with a painted finish in accordance with Specification 09960 Part 2, Section 2.3.G for Unit Masonry Assemblies.

**Drawing G-11, Interior Finish Schedule:**
Interior Finish Schedule (Headworks Building General Area):
Delete: "4" vinyl panels ceiling material."

And Insert: "Triple 4" vinyl soffit (solid) 0.035" thick and manufactured by Georgia Pacific or approved equal."

**Drawing G-17-2, Primary Settling Tanks – Tank #1 and #2 Collectors,**
Insert: "General Note: Demolish and remove existing primary settling sludge collection system in its entirety, including chain and flight system, rotating pipe skimmer, helical cross collector, drive units, sprockets, bearings and supports."

**Drawing G-19, Primary Settling Tanks – Tank #3 and #4 Collectors,**
Insert: "General Note: Demolish and remove existing primary settling sludge collection system in its entirety, including chain and flight system, rotating pipe skimmer, helical cross collector, drive units, sprockets, bearings and supports."

**Drawing G-31, Sludge Pumping Station Lower Level – Installation Plans, Detail 2/G-31:**
Delete: Legend Note #15: "6" Swing Check Valve with Lever & Weight."

And Insert: Legend Note #15: "6" Swing Check Valve with Lever & Spring."

**Drawing G-31, Sludge Pumping Station Lower Level – Installation Plans, Detail 3/G-31:**
Delete: Legend Note #15: "6" Swing Check Valve with Lever & Weight."

And Insert: Legend Note #15: "6" Swing Check Valve with Lever & Spring."

**Drawing G-32, Sludge Pumping Station Lower Level – Installation Details, Detail 4/G-32:**
Delete: Legend Note #15: "6" Swing Check Valve with Lever & Weight."

And Insert: Legend Note #15: "6" Swing Check Valve with Lever & Spring."

**Drawing G-45-2, Sludge Dewatering Support Structural Chain Hoist Beams:**
Insert: New Drawing G-45-2, as included in this addendum.

**Drawing G-46, Sludge Dewatering Details:**
Delete: Drawing G-46 in its entirety.

And Insert: Drawing G-46, as included in this addendum. This drawing shows revised conveyor supports.

**Drawing G-51, Skylight Removal/Misc. Work Schedule and Details, Skylight Concrete Demolition Schedule:**
Clarification: The saw cut dimensions A, B, C and D are independent of all others. The dimensions are based on field measurements to obstructions below the slab (tunnel ceiling). Due to plant modifications since the time of the measurements, the Contractor shall field verify this noting some adjustments may be required. Bids should be based on the information provided.

**Drawing G-51, Skylight Removal/Misc. Work Schedule and Details, Skylight Opening Patch Plan 3/G-51 and Skylight Opening Patch Section 4/G-51:**
Clarification: Any necessary shoring of the concrete during the removal is the responsibility of the contractor through means and methods.

## SPECIFICATIONS

**Section 00510-G Agreement**
Clarification: While the time for completion of the overall project shall remain at 540 days from the Notice to Proceed, the time for completion of the water line installation, testing and certification for operation shall be required to be completed within 180 days from the Notice to Proceed. The water line installation work shall be completed in compliance with Town of Poughkeepsie Water Department requirements.

**Section 00820 Prevailing Wage Rates, Federal Prevailing Wage Rates**
Delete: Federal Prevailing Wage Rates dated 2/5/2016

and Insert**:** Federal Prevailing Wage Rates dated 4/1/2016, as included with this Addendum.

**Section 02530, Paragraph 2.9 Manholes; A. Designed Precast Concrete Manholes:**
Delete references to ASTM C913 and ASTM C890 and insert ASTM C478. Top slabs shall be designed to meet AASHTO HS-44 Loading.

**Section 02667, Project Water Mains**
Insert the Following:

2.6 MASTER METER

A. Manufacturer and Model: Sensus Fireline, or Approved Equal.

B. Water meter shall consist of an 8 inch compound meter with strainer capable of operating from 4 to 2,000 gallons per minute (GPM) with an accuracy of ±1.5%. Meter shall be rated to a minimum of 175 psi and comply with AWWA C-700. Meter shall be NSF approved and UL listed. Meter registers shall be permanently sealed with a straight reading, utilizing an odometer type display for totalization. The water mater shall be subject to approval of the Town of Poughkeepsie Water Department. The water meter within the meter pit shall be provided with a remote reading system compatible with existing Town of Poughkeepsie equipment allowing for readings to be made without entering the pit.

2.7 BACKFLOW PREVENTER

A. Manufacturer and Model: Watts Series LF709, or Approved Equal.

B. Double check valve backflow assembly shall meet AWWA C510 and be listed as approved for backflow prevention based upon New York State Cross Connection Control requirements. The backflow preventer shall be subject to approval of the Town of Poughkeepsie Water Department. The unit shall be rated to a minimum pressure of 175 psi. Unit shall meet lead free installation requirements. The backflow preventer shall be a complete unit, including tight closing outside stem and yoke resilient seated shutoff valves and test cocks. Each check module shall have a captured spring and be accessible through a bolted cover. Seats shall be replaceable without special tools.

2.8 PRECAST WATER METER PIT

A. Precast concrete meter pit shall consist of precast base and sidewalls with separate top slab and shall have a minimum compressive strength of 5000 psi at the end of 28 days. Meter pit shall be designed to support AASHTO H-20 loading capacity. Top slab shall support at least 300 P.S.F. Precast concrete pit shall be Fort Miller or approved equal.

B. Vent pipes shall consist of 6" Schedule 40 PVC pipe with screened openings, as specified in the contract plans. Steps shall consist of steel reinforced polypropylene individual steps cast or anchored into the sidewall section with steps at 12" intervals. Masonry supports shall be as specified in Division 3 Section "Cast in Place Concrete"

C. Access hatch shall be Bilco Type J H20 or approved equal and shall be designed to support AASHTO H-20 loading capacity. The access hatch shall consist of the following:

1. Cover: Shall be 1/4" (6.3 mm) steel diamond pattern.
2. Frame: Channel frame shall be 1/4" (6.3 mm) steel with full anchor flange around the perimeter.
3. Hinges: Shall be specifically designed for horizontal installation and shall be through bolted to the cover with tamperproof Type 316 stainless steel lock bolts and shall be through bolted to the frame with Type 316 stainless steel bolts and locknuts.
4. Drain Coupling: Provide a 1-1/2" (38mm) drain.
5. Lifting mechanisms: Manufacturer shall provide the required number and size of compression spring operators enclosed in telescopic tubes to provide, smooth, easy, and controlled cover operation throughout the entire arc of opening and to act as a check in retarding downward motion of the cover when closing. The upper tube shall be the outer tube to prevent accumulation of moisture, grit, and debris inside the lower tube assembly. The lower tube shall interlock with a flanged support shoe fastened to a formed 1/4" gusset support plate.
6. A removable exterior turn/lift handle with a spring loaded ball detent shall be provided to open the cover and the latch release shall be protected by a flush, gasketed, removable screw plug.
7. Hinges: Heavy forged brass hinges, each having a minimum 3/8" (9.5mm) diameter Type 316 stainless steel pin, shall be provided and shall pivot so the cover does not protrude into the channel frame.
8. Cover shall be equipped with a hold open arm that automatically locks the cover in the open position. Cover shall be fitted with the required number and size of compression spring operators. Springs shall have an electrocoated acrylic finish.
9. A Type 316 stainless steel snap lock with fixed handle shall be mounted on the underside of the cover.
10. Compression spring tubes shall be an anti-corrosive composite, all fasteners shall be Type 316 stainless steel material, and all other hardware shall be zinc plated and chromate sealed. Springs shall have an electrocoated acrylic finish for corrosion resistance.

3.10 INSTALLATION OF PRECAST WATER METER PIT

A. Examine site and subsurface conditions for compliance with requirements for installation tolerances, grades, and other factors that could affect performance. Proceed with installation only after confirmation that satisfactory conditions exist.

B. Install water meter pit level, plumb and in accordance with the Design Plans. Set top of access hatch flush with surface of finished grade.

C. Install meter pit components in accordance with manufacturer's recommendations.

D. Clean all exposed surfaces of the meter pit in accordance with manufacturer's recommendations. Do not use cleaning products that could change the appearance of any exposed concrete surfaces.

E. Waterproof the Meter pit with a minimum of two (2) coats of a waterproof sealant, as specified in Division 3 Section "Integral Concrete Waterproofing Admixture".

F. Paint the access hatch as specified in Division 9.

**Section 05120 Structural Steel, Paragraph 1.2 B**
Delete: "Division 9 Section "Painting" for surface preparation and priming."

and Insert: "Division 9 Painting Sections for surface preparation and priming."

**Division 6 – Wood and Plastics**
Insert: Section 06100 Rough Carpentry, as included in this addendum.

**Division 7 – Thermal and Moisture Protection**
Insert: Section 07210 Building Insulation, as included in this addendum.
Insert: Section 07460 Soffit, as included in this addendum.

**Sections 07531 EPDM Membrane Roofing and 07591 Membrane Roofing Preparation**
Delete: Specification Sections 07531 and 07591 in their entirety.

**Section 08620 Skylights**
Delete: 3.2 Thickener Building Roof column from the Skylight Schedule

**Section 08520 Aluminum Windows**
Clarification: All windows shall be awning units with either swing-out project or top-hinged sash; two balance support arms, pivots with friction shoes, cam latch or

other standard latching hardware with lever or pull. All windows shall include the following:

1. Manufacturer's standard under-screen roto-type or geared-lever operator for sash located 6'-0" or less above floor.
2. Latch with eye for pole operation for sash located more than 6'-0" above floor.
3. Two point operation and 2 latch units on windows over 3'-0" wide.
4. Pole Operator: Tubular anodized aluminum pole, of proper length, with push-pull hook at top and rubber cap at bottom. One for each room of the Project, wherever pole-operated hardware is provided on window sash located more than 6'-0" above floor.

**Section 08520 Aluminum Windows, Paragraph 1.2.A**

Delete: "1. Fixed Windows.
2. Horizontal-Sliding Windows."

and Insert: "1. Awning Windows."

**Section 08520 Aluminum Windows, Paragraph 2.3**

Insert: C. Preglaze sash units. Use non-removable or removable nailed-on or snap-on type glazing stops (beads) coordinated with glass selection and glazing system indicated.

D. Low E Insulating Glass; Either of the Following:

1. Fused glass-edged insulating glass using either single-strength or double-strength glass, as recommended by the manufacturer, with a minimum 3/16 inch air space and low emissivity (molecular metallic oxide) coating on exterior side of interior glass.
2. Organically sealed metal edged insulating glass using either single-strength or double strength glass, as recommended by the manufacturer, with a minimum 3/16 inch air space and low emissivity (molecular metallic oxide) coating on exterior side of interior glass.

**Division 9 – Finishes**

Insert: Section 09260 Gypsum Board Assemblies, as included in this addendum

---

**Section 09310 Ceramic Tile**
Delete: Specification Section 09310 in its entirety.

**Sections 09912 Painting and 09960 High Performance Coatings**
Delete: Specification Sections 09912 and 09960 in their entirety.

and Insert: Specification Sections 09912 and 09960, as included in this addendum.

**Section 10431 Signs, Paragraph 2.4 Panel Sign Types:**
Delete: A. Room Signs in its entirety,
B. Toilet Room Signs in its entirety.

**Section 10431 Signs, Paragraph 2.3 Cast-Metal Plaques:**
Insert: Plaque Detail, as included in this addendum

**Section 11201 – Slide Gates and Weir Gates, Paragraph 2.3 - Slide Gate Schedule:**
Delete: "F. Location/Service: Diversion Chamber No. 2/Aeration Tank No. 1 Step Feed Inlet."

**Section 11330 – Wastewater Preliminary Treatment, Paragraph 1.3 System Description, I. Grit Washer Design Summary:**
Delete: "12. Grit Screw Speed Reducer Minimum Torque Rating, in.-lb- 12,800."

and Insert: "12. Grit Screw Speed Reducer Minimum Torque Rating, in.-lb- 13,700."

**Section 11330 – Wastewater Preliminary Treatment, 2.6 – Control System, G.,**
Insert: "15. NEMA 12 freestanding steel enclosure, (Note: This panel is located in an unclassified area)."

**Section 11400 – Primary Clarifiers, Paragraph 1.3 Submittals, A.:**
Insert the Following:

2. Attached are original construction reference drawings for use as a dimensional guideline. These drawings are included within this Section for the Contractors convenience; however, the Owner and Engineer assume no responsibility for the accuracy of this information or for interpretations or conclusions drawn from this data. The Contractor is expected to examine the sites for themselves.

Primary Settling Tanks #1 and #2:
1967 sheet S-14.pdf

1967 sheet S-15.pdf

Primary Settling Tanks #3 and #4:
1959 sheet 4 of 29.pdf
1959 sheet 5 of 29.pdf
1959 sheet 6 of 29.pdf
1959 sheet 7 of 29.pdf

**Section 11400 – Primary Clarifiers, Paragraph, 1.2 Summary, A.**
Insert: "4. Helical cross collector."

**Section 11400 – Primary Clarifiers, Paragraph 2.3 Rotating Pipe Skimmer (Worm Gear Type), B. Rotating Pipe:**
Delete: "1. Each primary skimmer shall be the same diameter as the existing skimmers and shall be Schedule 10 stainless steel or equivalent FRP pipe with accurately cut slots approximately 3 feet long. There shall be a 2" wide minimum continuous band between adjacent slots. Slots shall be straight and true with the centerline of the pipe. Pipe ends shall be perpendicular, smooth and free from burrs."

And Insert: "1. Each primary skimmer shall be 10" diameter and shall be Schedule 10 stainless steel or equivalent FRP pipe with accurately cut slots approximately 3 feet long. There shall be a 2" wide minimum continuous band between adjacent slots. Slots shall be straight and true with the centerline of the pipe. Pipe ends shall be perpendicular, smooth and free from burrs."

**Section 11400 – Primary Clarifiers, Part 2 – Products:**
Insert the following:

2.7 HELICAL CROSS COLLECTOR

A. General:
1. The helical sludge cross collector screw shall be a one piece fabricated helical screw with a nominal diameter of 12-inches.
2. The screw conveyor cross collection equipment shall be furnished by the same manufacturer providing the sludge collection equipment. The manufacturer shall be responsible for the design, fabrication and provision of adequate installation instructions to assure a fully operational sludge cross collection system in all respect.
3. Grease fitting extensions where required, 3/8 inch, shall be provided for all bearings equipped with grease fittings.

4. Each cross collector screw conveyor shall consist of a screw mounted in an existing concrete trough. Material settled into the trough shall be moved laterally by the rotation of the screw
5. All bolts, fasteners, anchor bolts and related hardware shall be Type 304 stainless steel.

B. Materials:
1. Structural steel shall conform to ASTM A36
2. Shapes and plates shall have a minimum thickness of ¼ inch and bolts a minimum diameter if ½ inch unless otherwise specified.
3. Stainless steel connectors shall be Type 304 stainless steel and shall be bolted using locking washers
   a. All shop and all field connections shall be made with an approved anti-seize lubricant, designed to reduce the possibility of galling.
4. Iron casting shall conform to ASTM A48.
5. All submerged hardware, including fasteners, embedded and expansion anchors shall be Type 304 stainless steel. All stainless steel hardware shall be fastened using an approved non-galling compound furnished by Loctite or equal.
6. Unless otherwise specified, other submerged metals shall be hot dip galvanized.

C. Construction and Fabrication:
1. Three-quarter pitch conveyor flights shall be one piece and fabricated of steel conforming to medium hard 235 Brinell abrasion resistant plate and hard faced along its entire periphery and 1 inch carrying surface. Flight minimum thickness shall be 3/8 inch before hard surfacing.
2. Screw center tubes shall be one piece and of A36 steel tube with sufficient wall thickness to give a maximum deflection not exceeding 5/32 inch between any two bearing support points, based upon formulas for a simply-supported tube with a uniform loading equal to the mass of the tube and flight material. Minimum wall thickness shall not be less than the nominal wall thickness for schedule 40 steel pipe. Center tubes shall be sized and selected to handle the rated motor horsepower and shall be greater than the specified minimum diameter and thickness if required to safely transmit motor torque.
3. The design of the center tube shall include a removable key or other means to disconnect and remove the screw conveyor, without disturbing other conveyor components. Provide pipe bushings in all pipe ends. Bushings shall be keyed where required for conveyor section removal.
4. Flights shall be of full-faced sectional construction made from precut steel plate, of uniform thickness, formed accurately to the pitch of the screw flights. Pitch tolerance shall be within 7/8 inch or minus ½ inch. Radial welds of the sectional flight segments shall be bevel-welded on both sides. All welds shall be full and continuous both sides of the flight junction to center tube.
5. Each section of the screws shall have the outside diameter of the flights over the entire length of the screw conveyor is within a tolerance of plus 3/16 inch or minus 3/8 inch.
6. The pitch measured between flights, measured at the outside diameter of the screw flights, along four straight lines parallel to the axial centerline through the bearings at 0, 90, 180 and 270 degrees, shall not vary more than pitch tolerances specified above.

7. Each screw shall be inspected at the factory by the manufacturer, prior to shipment to the site, to certify conformance to the specified dimensional tolerances.

D. Bearings and Hangers:
1. Each end wall bearing shall be of cast iron construction, hard iron or bronze sleeved and of the water lubricated, ball and socket, self-aligning type especially designed to prevent the accumulation of settled solids on their surfaces. The bearing shall be bolted directly to the tank wall.
2. Hangers: Hanger bearings shall be hard iron type mounted in heavy steel self-adjusting welded frames. Mounting hole in the frame shall be slotted parallel to screw to facilitate assembly and alignment. Hangers shall be self-adjusting expansion type equal to CEMA hanger No. 326.
3. End Drive and Coupling Shafts: Shafts shall be made of surface hardened low carbon steel securely fastened to conveyor pipe with at least two bolts arranged 90 degrees apart. Drive shaft shall be integral part of bearing block.
4. All shafts shall be a minimum 3 inch diameter. All couplings, end and drive shafts and shaft bolts shall be sized and selected to handle the required torque. High strength bolts and shafts shall be provided if required.

E. Driven Sprocket
1. The driven sprocket shall be of the split type and produced from UHMW-PE (Ultra High Molecular Weight Polyethylene). Sprocket halves shall be secured to one another with four stainless steel bolts through the hub and two stainless steel bolts through the web to ensure the alignment of the assembly sprocket.

F. Drive Chain
1. The drive chain shall be NH-78, 2.609" pitch, reinforced plastic, with 300 series stainless steel connecting pins. The chain shall have average working load strength of 1750 pounds and a weight of 1.4 pounds per foot.

**Section 11437 - Shaftless Screw Conveyors, 1.4 - Performance Requirements, C.,**
Delete the following:

| **TABLE - A**<br><br>**CONVEYOR Performance & Design** | | |
|---|---|---|
| **Conveyor Position** | **CNV-6-1** | **CNV-6-2** |
| **PERFORMANCE** | | |
| Material conveyed | Sludge | Sludge |
| Density, average, lbs/cu.ft. | 65 | 65 |
| Volume, ft3/hr. | 60 | 60 |
| Screw speed, rpm +-2 | 20 | 20 |
| Trough fill rate @ Design load, % | 30 | 30 |
| **SYSTEM DESIGN** | | |
| Length, approx. ft (to be determined in field) | (14)+/- | (36)+/- |

| | | |
|---|---|---|
| Degrees Incline, approx. | 11 | 15 |
| Feed Inlet From | Centrifuge | CNV-1 |
| Discharge outlet to | CNV-2 | Truck/bin |
| No. Discharges: | 1 | 1 |
| Discharge Type (axial or vertical) | Vertical | Vertical |
| CEMA Conveyor Trough diam. In. | 10 | 10 |
| Trough thickness, min. | 10 ga. | 10 ga. |
| Minimum lid thickness | 12 ga. | 12 ga. |
| Lid length, inches max. | 48 | 48 |
| Chute thickness, min. | 10 ga. | 10 ga. |
| Spiral OD, Nom. in. | 9 | 14 |
| Spiral, outer size, in. | 2.5 x 0.75 | 2.5 x 0.75 |
| Spiral pitch (full or 2/3) | Full | Full |
| Spiral insert size, in. | 0.75 x 0.5 | 0.75 x 0.5 |
| Liner type | Polystone M | Polystone M |
| Liner length, ft, max | 4 | 4 |
| Liner thickness, inch, min. | 0.375 | 0.375 |
| Location of drives | pulling | pulling |
| Drive Hp, min. | 2 | 5 |
| Motion failure probes, # per conv | 1 | 1 |
| NEMA rating at probe | 4 | 4 |

And Insert the following:

| **TABLE - A**<br><br>**CONVEYOR Performance & Design** | | |
|---|---|---|
| **Conveyor Position** | **CNV-6-1** | **CNV-6-2** |
| **PERFORMANCE** | | |
| Material conveyed | Sludge | Sludge |
| Density, average, lbs/cu.ft. | 65 | 65 |
| Volume, ft3/hr. | 181 | 181 |
| Screw speed, rpm +-2 | 20 | 20 |
| Trough fill rate @ Design load, % | 30 | 30 |
| **SYSTEM DESIGN** | | |
| Length, approx. ft (to be determined in field) | (14)+/- | (36)+/- |
| Degrees Incline, approx. | 11 | 15 |
| Feed Inlet From | Centrifuge | CNV-1 |
| Discharge outlet to | CNV-6-2 | Truck/bin |
| No. Discharges: | 1 | 1 |
| Discharge Type (axial or vertical) | Vertical | Vertical |
| CEMA Conveyor Trough diam. In. | 10 | 10 |

| | | |
|---|---|---|
| Trough thickness, min. | 10 ga. | 10 ga. |
| Minimum lid thickness | 12 ga. | 12 ga. |
| Lid length, inches max. | 48 | 48 |
| Chute thickness, min. | 10 ga. | 10 ga. |
| Spiral OD, Nom. in. | 9 | 14 |
| Spiral, outer size, in. | 2.5 x 0.75 | 2.5 x 0.75 |
| Spiral pitch (full or 2/3) | Full | Full |
| Spiral insert size, in. | 0.75 x 0.5 | 0.75 x 0.5 |
| Liner type | Polystone M | Polystone M |
| Liner length, ft, max | 4 | 4 |
| Liner thickness, inch, min. | 0.375 | 0.375 |
| Flanged Drain Outlet, size in. | 6” Dia. | 6” Dia. |
| Location of drives | pulling | pulling |
| Drive Hp, min. | 3 | 5 |
| Motion failure probes, # per conv | 1 | 1 |
| NEMA rating at probe | 4 | 4 |

**Section 11437 - Shaftless Screw Conveyors, Part 2 - Products, H.,**
Delete: “6. The starter/overload shall be furnished by the conveyor manufacturer.”

**Section 13520 - Control Panels, Paragraph 1.2,**
Delete the following:

1.2 Summary

A. This section covers requirements for Control Panels and equipment and is in addition to requirements in Section 13500, “Process Monitoring and Control System”.

B. Related Sections include the following:
   1. Other Division 13 Specification Sections.
   2. Division 15 Specification Sections.
   3. Division 16 Specification Sections including containing instrument wiring, conductors and conduit.

C. The control panels fabricated under this Section consist of:
   1. Main Control Panel MCP-1, by the Wastewater Facilities General Contractor; located at the Main Plant Control Room.
   2. Sludge Pumping Station Control Panel, RP-5-1, by the Wastewater Facilities General Contractor; located at the Sludge Pumping Station.
   3. Incinerator Process Control Panel ICP-1, by the Wastewater Facilities General Contractor; located at the Incinerator Control Room.

And Insert the following:

1.2 Summary

A. The control panels fabricated under this Section consist of:
   1. Panels listed in the 3.5 - Control Panel Schedule.

B. Related Sections include the following:
   1. Other Division 13 Specification Sections.
   2. Division 15 Specification Sections.
   3. Division 16 Specification Sections including containing instrument wiring, conductors and conduit.

**Section 13520 - Control Panels, Paragraph 3.5 - Control Panel Schedule, A.,**

Delete the following:

| Control Panel | Service | Enclosure Type | PLC | Alarm Indication | | HMI | Source |
|---|---|---|---|---|---|---|---|
| | | | | Strobe | Horn | | |
| RP-1-1 | PT-1-1 Control Panel | FS; Type 12 | Medium | Yes | Yes | 15-inch | Packaged with preliminary treatment system |

And Insert the following:

| Control Panel | Service | Enclosure Type | PLC | Alarm Indication | | HMI | Source |
|---|---|---|---|---|---|---|---|
| | | | | Strobe | Horn | | |
| RP-1-1 | PT-1-1 Control Panel | FS; Type 12 | Small | Yes | Yes | 15-inch | Packaged with preliminary treatment system |

**Section 14600 Hoists and Self-Supporting Overhead Bridge Crane Systems, Paragraph 1.03. A**

Delete: "System Capacity: Will lift and move 2.5 tons of equipment, containers, materials, etc. The 2.5 ton weight is the actual maximum weight of the largest piece of equipment to be lifted, use appropriate safety factors in determining the safe operating load."

and Insert: "System Capacity: The lifting capacity is specified in Part 2 Sections 2.01 and 2.02 of this specification. Use appropriate safety factors in determining the safe operating load."

**Section 14600 Hoists and Self-Supporting Overhead Bridge Crane Systems, Paragraph 1.03 Design Requirements**

Delete: "C. Crane shall be motor propelled, single or double girder with a minimum span of 20 feet. The bridge crane shall be of non-sparking design suitable for Class I, Division I locations and shall be low headroom construction."

And Insert: "C.CH-1-1 Crane shall be motor propelled, single or double girder with a minimum span of 20 feet. The bridge crane shall be of non-sparking design suitable for Class I, Division I, Group D locations and shall be low headroom construction."

**Section 14600 Hoists and Self-Supporting Overhead Bridge Crane Systems, Paragraph 2.01, A.9**

Delete: "Hook with safety latch. Hook shall be mounted to swivel on thrust bearing."

and Insert: "The standard load hook shall be forged alloy steel (34CrMo4 or StE355). The hook is to be equipped with a spring-loaded safety latch and supported on a thrust bearing to allow the hook to rotate 360° easily even under load."

**Section 14600 Hoists and Self-Supporting Overhead Bridge Crane Systems, Paragraph 2.01, B.5**

Delete: "5. Interlocks (if applicable):"
a. In its entirety.
b. In its entirety.

**Section 14600 Hoists and Self-Supporting Overhead Bridge Crane Systems, Paragraph 2.02 Sludge Dewatering Hoist, CH-6-1 and CH-6-2**

Delete: "19. Hoisting motor shall be totally enclosed with IP55 protection, minimum class F insulation, Klixon type bimetal switch for thermal protection and shall have a 25% ED rating.
20. Hoisting motor shall be single speed squirrel cage type.
19. Hoisting motor shall be totally enclosed with IP55 protection, minimum class F insulation, Klixon type bimetal switch for thermal protection and shall have a 50% ED rating.
20. Hoisting motor shall be single speed squirrel cage type.
19. Hoisting motor shall be totally enclosed with IP55 protection, minimum class F insulation, Klixon type bimetal switch for thermal protection and shall have a 50% ED rating.
20. Hoisting motor shall be two-speed/two winding squirrel cage type with a speed ratio of 4:1."

And Insert: "19. Hoisting motor shall be totally enclosed with IP55 protection, minimum class F insulation, Klixon type bimetal switch for thermal protection and shall have a 50% ED rating.

20. Hoisting motor shall be two-speed/two winding squirrel cage type with a speed ratio of 4:1."

**Section 14600 Hoists and Self-Supporting Overhead Bridge Crane Systems, Paragraph 2.02.A**

Delete: "21. The hoist shall be equipped with a push type trolley attached to the hoist body with a coupling or lug connection. The push trolley shall be equipped with crown tread wheels for use on standard I-beams and wide flange W-beams. Safety drop lugs and rubber bumpers shall be included.

22. The hoist shall be equipped with a plug-in pendant with appropriate drop for lift of hoist. Pendant station enclosure shall have a rating of NEMA 4, 4X, 5 or IP65. P/B station to include emergency red mushroom stop button - push to maintain, turn to release, and two buttons for hoist motion – one for each direction of travel. "

and Insert: "21. The hoist shall be equipped with a push type trolley attached to the hoist body with a coupling or lug connection. The push trolley shall be equipped with crown tread wheels for use on standard I-beams and wide flange W-beams. Safety drop lugs and rubber bumpers shall be included.

22. The hoist shall be equipped with a plug-in pendant with appropriate drop for lift of hoist. Pendant station enclosure shall have a rating of NEMA 4, 4X, 5 or IP65. P/B station to include emergency red mushroom stop button - push to maintain, turn to release, and two buttons for hoist motion – one for each direction of travel. "

**Section 15050 Basic Mechanical and Material Methods, Paragraph 3.8**

Delete: "Painting of mechanical systems, equipment, and components is specified in Division 9 Section "Painting.""

and Insert: "Painting of mechanical systems, equipment, and components is specified in Division 9 Painting Sections."

**Section 15052 Process Piping, Paragraph 3.7,**

Delete: "I. Pumped filtrate drain and polymer piping: 100 psi operating pressure; 150 psi test pressure:"

And Insert: "I. Pumped centrate drain, filtrate drain and polymer piping: 100 psi operating pressure; 150 psi test pressure:"

**Section 15052 Process Piping, Paragraph 3.7,**
Delete: "J. Filtrate drain piping, gravity flow: 0 psi operating pressure; 5 psi test pressure:"

And Insert: "J. Centrate and Filtrate drain piping, gravity flow: 0 psi operating pressure; 5 psi test pressure:"

**Section 15052 Process Piping, Paragraph 3.2**
Delete: "Painting in accordance with Division 9 Section "Painting.""

and Insert: "Paint in accordance with Division 9 Painting Sections."

91-20-5 (5/97)

NEW YORK STATE DEPARTMENT OF ENVIRONMENTAL CONSERVATION

State Pollutant Discharge Elimination System (SPDES)

# NOTICE / RENEWAL APPLICATION / PERMIT

Please read **ALL** instructions on the back before completing this application form. Please **TYPE** or **PRINT** clearly in ink.

## PART 1 - NOTICE 10/14/2011

Permittee Contact Name, Title, Address

POUGHKEEPSIE (T) - ARLINTON WWTP
~~JAMES PODESZEDLIK~~ Stephen Segna
78 SAND DOCK ROAD
POUGHKEEPSIE NY 12601

Facility and SPDES Permit Information

Name: POUGHKEEPSIE (T) ARLINGTON WWTP
Ind. Code: 4952 County: DUTCHESS
DEC No.: 3-1346-00052/00003
SPDES No.: NY 002 6271
Expiration Date: 08/31/2012
Application Due By: 03/04/2012

**Are these name(s) & address(es) correct?** if not, please write corrections above.

The State Pollutant Discharge Elimination System Permit for the facility referenced above expires on the date indicated. You are required by law to file a complete renewal application **at least 180 days prior to expiration of your current permit. Note the "Application Due By" date above.**

**CAUTION:** This short application form and attached questionnaire are the only forms acceptable for permit renewal. Sign Part 2 below and mail only this form and the completed questionnaire using the enclosed envelope. *Effective April 1, 1994 the Department no longer assesses SPDES application fees.*

**If there are changes to your discharge, or to operations affecting the discharge,** then in addition to this renewal application, you must also submit a separate permit modification application to the Regional Permit Administrator for the DEC region in which the facility is located, as required by your current permit. See the reverse side of this page for instructions on filing a modification request.

## PART 2 - RENEWAL APPLICATION

**CERTIFICATION:** I hereby affirm that under penalty of perjury that the information provided on this form and all attachments submitted herewith is true to the best of my knowledge and belief. False statements made herein are punishable as a Class A misdemeanor pursuant to section 210.45 of the Penal Law.

Patricia Myers — Name of person signing application (see instructions on back)

Supervisor — Title

Patricia Myers — Signature

10/24/11 — Date

## PART 3 - PERMIT (Below this line - Official Use Only)

* * * **Effective Date:** 9/1/12 **Expiration Date:** 8/31/17

Stuart Fox — Permit Administrator

**Address:** NYSDEC - Division of Environmental Permits
Bureau of Environmental Analysis
625 Broadway, Albany, NY 12233-1750

Stuart M. Fox — Signature

DEC 29 2011 — Date

This permit together with the previous valid permit for this facility issued 9/1/07 and subsequent modifications constitute authorization to discharge wastewater in accordance with all terms, conditions and limitations specified in the previously issued valid permit, modifications thereof or issued as part of this permit, including any special or general conditions attached hereto. Nothing in this permit shall be deemed to waive the Department's authority to initiate a modification of this permit on the grounds specified in 6NYCRR §621.14, 6NYCRR §754.4 or 6NYCRR §757.1 existing at the time this permit is issued or which arise thereafter.

~~Attachments: General Conditions dated ___/___~~

RECEIVED NYSDEC ENVIRONMENTAL 11 OCT 27 AM 10:11

91-20-5 (5/97)

NEW YORK STATE DEPARTMENT OF ENVIRONMENTAL CONSERVATION

**State Pollutant Discharge Elimination System (SPDES)**

# NOTICE / RENEWAL APPLICATION / PERMIT

Please read **ALL** instructions on the back before completing this application form. Please **TYPE** or **PRINT** clearly in ink.

## PART 1 - NOTICE 10/14/2011

Permittee Contact Name, Title, Address

POUGHKEEPSIE (T) - ARLINTON WWTP
~~JAMES PODESZEDLIK~~ Stephen Segna X
78 SAND DOCK ROAD
POUGHKEEPSIE NY 12601

Facility and SPDES Permit Information

Name: POUGHKEEPSIE (T) ARLINGTON WWTP
Ind. Code: 4952 County: DUTCHESS
DEC No.: 3-1346-00052/00003
SPDES No.: NY 002 6271
Expiration Date: 08/31/2012
Application Due By: 03/04/2012

**Are these name(s) & address(es) correct?** if not, please write corrections above.

The State Pollutant Discharge Elimination System Permit for the facility referenced above expires on the date indicated. You are required by law to file a complete renewal application at **least 180 days prior to expiration of your current permit. Note the "Application Due By" date above.**

**CAUTION:** This short application form and attached questionnaire are the only forms acceptable for permit renewal. Sign Part 2 below and mail only this form and the completed questionnaire using the enclosed envelope. *Effective April 1, 1994 the Department no longer assesses SPDES application fees.*

**If there are changes to your discharge, or to operations affecting the discharge,** then in addition to this renewal application, you must also submit a separate permit modification application to the Regional Permit Administrator for the DEC region in which the facility is located, as required by your current permit. See the reverse side of this page for instructions on filing a modification request.

## PART 2 - RENEWAL APPLICATION

**CERTIFICATION:** I hereby affirm that under penalty of perjury that the information provided on this form and all attachments submitted herewith is true to the best of my knowledge and belief. False statements made herein are punishable as a Class A misdemeanor pursuant to section 210.45 of the Penal Law.

Patricia Myers — Supervisor

Name of person signing application (see instructions on back) — Title

Patricia Myers — 10/24/11

Signature — Date

## PART 3 - PERMIT (Below this line - Official Use Only)

Effective Date: 9/1/12 Expiration Date: 8/31/17

Stuart Fox

Permit Administrator

Address: NYSDEC - Division of Environmental Permits
Bureau of Environmental Analysis
625 Broadway, Albany, NY 12233-1750

Stuart M. Fox — DEC 29 2011

Signature — Date

This permit together with the previous valid permit for this facility issued 9/1/07 and subsequent modifications constitute authorization to discharge wastewater in accordance with all terms, conditions and limitations specified in the previously issued valid permit, modifications thereof or issued as part of this permit, including any special or general conditions attached hereto. Nothing in this permit shall be deemed to waive the Department's authority to initiate a modification of this permit on the grounds specified in 6NYCRR §621.14, 6NYCRR §754.4 or 6NYCRR §757.1 existing at the time this permit is issued or which arise thereafter.

~~Attachments: General Conditions dated ___/___~~

RECEIVED NYSDEC

New York State Department of Environmental Conservation
Division of Environmental Permits, Region 3
21 South Putt Corners Road, New Paltz, New York 12561-1620
Phone: (845) 256-3054 FAX: (845) 255-4659
Website: www.dec.ny.gov

45/11 NY

Joe Martens
Commissioner

March 31, 2011

Patricia Meyers, Supervisor
Town of Poughkeepsie
One Overocker Road
Poughkeepsie, NY 12603

Re: **Arlington Wastewater Treatment Plant**
**DEC Permit No. 3-1346-00052/00003**
**SPDES No. NY 0026271**
**Town of Poughkeepsie, Dutchess County**
**Notice of Permit Correction/Modification**

Dear Supervisor Myers:

The New York State Department of Environmental Conservation (DEC or Department) has recently become aware of errors in the referenced permit issued to the Town on April 19, 2010 related to the sampling frequencies for TSS (pg. 3) and fecal coliform and total residual chlorine (pg. 4). The changes in frequencies are in accordance with Department Guidance TOGS 1.3.3 Appendix A. The enclosed permit corrects the frequencies and is now in effect.

Please ensure that your treatment plant operator is made aware of these corrections and provided with a copy of this permit. If you have any comments or questions please contact me at (845) 256-3059.

Sincerely,

Alexander F. Ciesluk, Jr.

Alexander F. Ciesluk, Jr.
Deputy Regional Permit Administrator

Enc: Permit 3-1346-00052/00003
Cc: US EPA Reg II
Dutchess Co. Health
Ecc: R. Coriale; V. Gandhi; E. Shirkey; C. Jamison, DEC

NEW YORK STATE DEPARTMENT OF ENVIRONMENTAL CONSERVATION

# State Pollutant Discharge Elimination System (SPDES)
# DISCHARGE PERMIT

First3.99

| | | | |
|---|---|---|---|
| Industrial Code: | 4952 | SPDES Number: | NY- 002 6271 |
| Discharge Class (CL): | 05 | DEC Number: | 3-1346-00052/00003 |
| Toxic Class (TX): | T | Effective Date (EDP): | 09/01/2007 |
| Major Drainage Basin: | 13 | Expiration Date (ExDP): | 08/31/2012 |
| Sub Drainage Basin: | 01 | Modification Dates: (EDPM) | 06/01/2010; 3/31/11 |
| Water Index Number: | H (portion 4) | | |
| Compact Area: | | | |

This SPDES permit is issued in compliance with Title 8 of Article 17 of the Environmental Conservation Law of New York State and in compliance with the Clean Water Act, as amended, (33 U.S.C. §1251 et.seq.)(hereinafter referred to as "the Act").

## PERMITTEE NAME AND ADDRESS

Name: Town of Poughkeepsie  Attention: Town Supervisor
Street: PO Box 3209
City: Poughkeepsie  State: NY  Zip Code: 12603

is authorized to discharge from the facility described below:

## FACILITY NAME AND ADDRESS

Name: Poughkeepsie (T) Arlington WWTP
Location (C,T,V): Poughkeepsie (T)  County: Dutchess
Facility Address: 78 Sand Dock Road
City: Poughkeepsie  State: NY  Zip Code: 12601
NYTM -E:  NYTM - N:
From Outfall No.: 001  at Latitude: 41 ° 38 ′ 56 ″  & Longitude: 73 ° 56 ′ 42 ″
into receiving waters known as: Hudson River  Class: A

and; (list other Outfalls, Receiving Waters & Water Classifications)
NA

in accordance with: effluent limitations; monitoring and reporting requirements; other provisions and conditions set forth in this permit; and 6 NYCRR Part 750-1.2(a) and 750-2.

## DISCHARGE MONITORING REPORT (DMR) MAILING ADDRESS

Mailing Name: Town of Poughkeepsie, Arlington WWTP
Street: 78 Sand Dock Road
City: Poughkeepsie  State: NY  Zip Code: 12601
Responsible Official or Agent: George B. Cacchio, Managing Operator  Phone: ( 845) 462-2280

This permit and the authorization to discharge shall expire on midnight of the expiration date shown above and the permittee shall not discharge after the expiration date unless this permit has been renewed, or extended pursuant to law. To be authorized to discharge beyond the expiration date, the permittee shall apply for permit renewal not less than 180 days prior to the expiration date shown above.

DISTRIBUTION:

| | |
|---|---|
| CO BWP - Permit Coordinator<br>RWE, R. Coriale<br>EPA Region II<br>Dutchess Co. Health<br>E. Shirkey; V. Gandhi, DEC | Permit Administrator: Alexander F. Ciesluk, Jr.<br>Address: 21 South Putt Corners Rd.<br>New Paltz, NY 12561<br>Signature:  Date: / / |

# PERMIT LIMITS, LEVELS AND MONITORING DEFINITIONS

| OUTFALL | WASTEWATER TYPE | RECEIVING WATER | EFFECTIVE | EXPIRING |
|---|---|---|---|---|
| | This cell describes the type of wastewater authorized for discharge. Examples include process or sanitary wastewater, storm water, non-contact cooling water. | This cell lists classified waters of the state to which the listed outfall discharges. | The date this page starts in effect. (e.g. EDP or EDPM) | The date this page is no longer in effect. (e.g. ExDP) |

| PARAMETER | MINIMUM | MAXIMUM | UNITS | SAMPLE FREQ. | SAMPLE TYPE |
|---|---|---|---|---|---|
| e.g. pH, TRC, Temperature, D.O. | The minimum level that must be maintained at all instants in time. | The maximum level that may not be exceeded at any instant in time. | SU, °F, mg/l, etc. | | |

| PARA-METER | EFFLUENT LIMIT | PRACTICAL QUANTITATION LIMIT (PQL) | ACTION LEVEL | UNITS | SAMPLE FREQUENCY | SAMPLE TYPE |
|---|---|---|---|---|---|---|
| | Limit types are defined below in Note 1. The effluent limit is developed based on the more stringent of technology-based limits, required under the Clean Water Act, or New York State water quality standards. The limit has been derived based on existing assumptions and rules. These assumptions include receiving water hardness, pH and temperature; rates of this and other discharges to the receiving stream; etc. If assumptions or rules change the limit may, after due process and modification of this permit, change. | For the purposes of compliance assessment, the analytical method specified in the permit shall be used to monitor the amount of the pollutant in the outfall to this level, provided that the laboratory analyst has complied with the specified quality assurance/quality control procedures in the relevant method. Monitoring results that are lower than this level must be reported, but shall not be used to determine compliance with the calculated limit. This PQL can be neither lowered nor raised without a modification of this permit. | Action Levels are monitoring requirements, as defined below in Note 2, that trigger additional monitoring and permit review when exceeded. | This can include units of flow, pH, mass, Temperature, concentration. Examples include µg/l, lbs/d, etc. | Examples include Daily, 3/week, weekly, 2/month, monthly, quarterly, 2/yr and yearly. | Examples include grab, 24 hour composite and 3 grab samples collected over a 6 hour period. |

Note 1: DAILY DISCHARGE.: The discharge of a pollutant measured during a calendar day or any 24-hour period that reasonably represents the calendar day for the purposes of sampling. For pollutants expressed in units of mass, the 'daily discharge' is calculated as the total mass of the pollutant discharged over the day. For pollutants with limitations expressed in other units of measurement, the 'daily discharge' is calculated as the average measurement of the pollutant over the day.

DAILY MAX.: The highest allowable daily discharge. DAILY MIN.: The lowest allowable daily discharge.

MONTHLY AVG: The highest allowable average of daily discharges over a calendar month, calculated as the sum of each of the daily discharges measured during a calendar month divided by the number of daily discharges measured during that month.

7 DAY ARITHMETIC MEAN (7 day average): The highest allowable average of daily discharges over a calendar week.

30 DAY GEOMETRIC MEAN: The highest allowable geometric mean of daily discharges over a calendar month, calculated as the antilog of: the sum of the log of each of the daily discharges measured during a calendar month divided by the number of daily discharges measured during that month.

7 DAY GEOMETRIC MEAN: The highest allowable geometric mean of daily discharges over a calendar week.

RANGE: The minimum and maximum instantaneous measurements for the reporting period must remain between the two values shown.

Note 2: ACTION LEVELS: Routine Action Level monitoring results, if not provided for on the Discharge Monitoring Report (DMR) form, shall be appended to the DMR for the period during which the sampling was conducted. If the additional monitoring requirement is triggered as noted below, the permittee shall undertake a short-term, high-intensity monitoring program for the parameter(s). Samples identical to those required for routine monitoring purposes shall be taken on each of at least three consecutive operating and discharging days and analyzed. Results shall be expressed in terms of both concentration and mass, and shall be submitted no later than the end of the third month following the month when the additional monitoring requirement was triggered. Results may be appended to the DMR or transmitted under separate cover to the same address. If levels higher than the Action Levels are confirmed, the permit may be reopened by the Department for consideration of revised Action Levels or effluent limits. The permittee is not authorized to discharge any of the listed parameters at levels which may cause or contribute to a violation of water quality standards.

# INTERIM PERMIT LIMITS, LEVELS AND MONITORING

| OUTFALL No. | LIMITATIONS APPLY: | RECEIVING WATER | EFFECTIVE | EXPIRING |
|---|---|---|---|---|
| 001 | All Year unless otherwise noted | Hudson River | EDPM | Completion of construction [1] |

| PARAMETER | EFFLUENT LIMIT | | | | | MONITORING REQUIREMENTS | | | | FN |
|---|---|---|---|---|---|---|---|---|---|---|
| | | | | | | | | Location | | |
| | Type | Limit | Units | Limit | Units | Sample Frequency | Sample Type | Inf. | Eff. | |
| Flow | Monthly Average | 4.0 | | | MGD | Continuous | Recorder | X | | |
| $BOD_5$ | Monthly Average | 30 | mg/l | 1000 | lbs/d | 1/week | 24 hr. Composite | X | X | 2 |
| $BOD_5$ | 7 Day Average | 45 | mg/l | 1500 | lbs/d | 1/week | 24 hr. Composite | | X | |
| Solids, Suspended | Monthly Average | 30 | mg/l | 1000 | lbs/d | 1/week | 24 hr. Composite | X | X | 2 |
| Solids, Suspended | 7 Day Average | 45 | mg/l | 1500 | lbs/d | 1/week | 24 hr. Composite | | X | |
| Solids, Settleable | Daily Maximum | 0.3 | ml/l | | | 2/day | Grab | | X | |
| pH | Range | 6.0 – 9.0 | SU | | | 2/day | Grab | | X | |
| Nitrogen, Ammonia (as $NH_3$) | Daily Maximum | Monitor | mg/l | | | 1/quarter | 24 hr. Composite | | X | |
| Nitrogen, TKN (as N) | Daily Maximum | Monitor | mg/l | | | 1/quarter | 24 hr. Composite | | X | |
| Temperature | Daily Maximum | Monitor | Deg F | | | 2/day | Grab | | X | |
| Effluent Disinfection required: [ x ] All Year [ ] Seasonal from _____ to _____ | | | | | | | | | | |
| Coliform, Fecal | 30 day geometric mean | 200 | No./ 100 ml | | | 1/week | Grab | | X | |
| Coliform, Fecal | 7 day geometric mean | 400 | No./ 100 ml | | | 1/week | Grab | | X | |
| Chlorine, Total Residual | Daily Max. | 2.0 | mg/l | | | 2/day | Grab | | X | 3 |

FOOTNOTES:

1. The limits on this page shall expire upon start-up of the 5.0 MGD facility. The start-up date for the 5.0 MGD facility will be identified in a letter from the permittee to the offices listed on the Monitoring, Reporting, and Recording page of this permit and to the Chief, Bureau of Water Permits, South Section, 625 Broadway, Albany, NY 12233. Start-up shall commence only after receipt of certification from a New York State Professional Engineer that the treatment plant was constructed in accordance with the approved Engineering Reports, Plans, and Specification.

2. And effluent shall not exceed 15% and 15% of the influent values for $BOD_5$ & TSS respectively.

3. Total Residual Chlorine limit is only applicable if chlorination is used for disinfection.

# FINAL PERMIT LIMITS, LEVELS AND MONITORING

| OUTFALL No. | LIMITATIONS APPLY: | RECEIVING WATER | EFFECTIVE | EXPIRING |
|---|---|---|---|---|
| 001 | All Year unless otherwise noted | Hudson River | Completion of construction [1] | 08/31/2012 |

| PARAMETER | EFFLUENT LIMIT | | | | | MONITORING REQUIREMENTS | | | | FN |
|---|---|---|---|---|---|---|---|---|---|---|
| | | | | | | | | Location | | |
| | Type | Limit | Units | Limit | Units | Sample Frequency | Sample Type | Inf. | Eff. | |
| Flow | Monthly Average | 5.0 | MGD | | | Continuous | Recorder | X | | |
| $BOD_5$ | Monthly Average | 30 | mg/l | 1300 | lbs/d | 2/week | 24 hr. Composite | X | X | 2 |
| $BOD_5$ | 7 Day Average | 45 | mg/l | 1900 | lbs/d | 2/week | 24 hr. Composite | | X | |
| Solids, Suspended | Monthly Average | 30 | mg/l | 1300 | lbs/d | 2/week | 24 hr. Composite | X | X | 2 |
| Solids, Suspended | 7 Day Average | 45 | mg/l | 1900 | lbs/d | 2/week | 24 hr. Composite | | X | |
| Solids, Settleable | Daily Maximum | 0.3 | ml/l | | | 3/day | Grab | | X | |
| pH | Range | 6.0 – 9.0 | SU | | | 3/day | Grab | | X | |
| Nitrogen, Ammonia (as $NH_3$) | Daily Maximum | Monitor | mg/l | | | 1/quarter | 24 hr. Composite | | X | |
| Nitrogen, TKN (as N) | Daily Maximum | Monitor | mg/l | | | 1/quarter | 24 hr. Composite | | X | |
| Temperature | Daily Maximum | Monitor | Deg F | | | 3/day | Grab | | X | |
| Effluent Disinfection required: [ x ] All Year [ ] Seasonal from _____ to | | | | | | | | | | |
| Coliform, Fecal | 30 day geometric mean | 200 | No./ 100 ml | | | 2/week | Grab | | X | |
| Coliform, Fecal | 7 day geometric mean | 400 | No./ 100 ml | | | 2/week | Grab | | X | |
| Chlorine, Total Residual | Daily Maximum | 2.0 | mg/l | | | 3/day | Grab | | X | 3 |

**FOOTNOTES:**

1. The limits on this page shall be effective upon startup of the 5.0 MGD facility. The start-up date for the 5.0 MGD facility will be identified in a letter from the permittee to the offices listed on the Monitoring, Reporting, and Recording page of this permit and to the Chief, Bureau of Water Permits, South Section, 625 Broadway, Albany, NY 12233. Start-up shall commence only after receipt of certification from a New York State Professional Engineer that the treatment plant was constructed in accordance with the approved Engineering Reports, Plans, and Specification.

2. And effluent shall not exceed 15% and 15% of influent concentration values for $BOD_5$ & TSS respectively.

3. Total Residual Chlorine limit is only applicable if chlorination is used for disinfection.

# PERMIT LIMITS, LEVELS AND MONITORING

| OUTFALL No. | LEVELS APPLY: | RECEIVING WATER | EFFECTIVE | EXPIRING |
|---|---|---|---|---|
| 001 | All year unless otherwise noted | Hudson River | EDPM | 08/31/2012 |

| PARAMETER | EFFLUENT LIMIT | | ACTION LEVEL | UNITS | SAMPLE FREQUENCY | SAMPLE TYPE | FN |
|---|---|---|---|---|---|---|---|
| | Monthly Avg | Daily Max | | | | | |
| Mercury | | 50 | | ng/l | Quarterly | Grab | 4 |
| Copper, Total | | | 1.5 | lbs/d | Monthly | 24 hr Composite | |
| Lead, Total | | | 1.0 | lbs/d | Monthly | 24 hr Composite | |
| Nickel, Total | | | 1.5 | lbs/d | Monthly | 24 hr Composite | |
| Silver, Total | | | 1.9 | lbs/d | Monthly | 24 hr Composite | |
| Zinc, Total | | | 3.5 | lbs/d | Monthly | 24 hr Composite | |
| WET – Acute Invertebrate | | | 58 | TUa | Quarterly | See footnote | 5 |
| WET – Acute Vertebrate | | | 58 | TUa | Quarterly | See footnote | 5 |
| WET – Chronic Invertebrate | | | 389 | TUc | Quarterly | See footnote | 5 |
| WET – Chronic Vertebrate | | | 389 | TUc | Quarterly | See footnote | 5 |

See footnote on next page

## FOOTNOTE:

4. EPA method 1631 must be used in the analysis.

5. Whole Effluent Toxicity (WET) Testing:
Testing Requirements - WET testing shall consist of **Acute and if necessary**. WET testing shall be performed in accordance with 40 CFR Part 136 and TOGS 1.3.2 unless prior written approval has been obtained from the Department. The test species shall be *Ceriodaphnia dubia* (water flea - invertebrate) and *Pimephales promelas* (fathead minnow - vertebrate). Receiving water collected upstream from the discharge should be used for dilution. All tests conducted should be static-renewal (two 24 hr composite samples with one renewal for Acute tests and three 24 hr composite samples with two renewals for Chronic tests). The appropriate dilution series bracketing the IWC and including one exposure group of 100% effluent should be used to generate a definitive test endpoint, otherwise an immediate rerun of the test is required. WET testing shall be coordinated with the monitoring of chemical and physical parameters limited by this permit so that the resulting analyses are also representative of the sample used for WET testing. The ratio of critical receiving water flow to discharge flow (i.e. dilution ratio) is 194:1 for acute, and 388:1 for chronic. Discharges which are disinfected using chlorine should be dechlorinated prior to WET testing or samples shall be taken immediately prior to the chlorination system.

Monitoring Period - WET testing shall be performed at the specified sample **during calendar years ending in 8 and 3, beginning in January and lasting for a period of one full year.**

Reporting - Toxicity Units shall be calculated and reported on the DMR as follows: TUa = (100)/(48 hr LC50) or (100)/(48 hr EC50) (note that Acute data is generated by both Acute and Chronic testing) and TUc = (100)/(NOEC) when Chronic testing has been performed or TUc = (TUa) x (10) when only Acute testing has been performed and is used to predict Chronic test results, where the 48 hr LC50 or 48 hr EC50 and NOEC are expressed in % effluent. This must be done for both species and using the Most Sensitive Endpoint (MSE) or the lowest NOEC and corresponding highest TUc. Report a TUa of 0.3 if there is no statistically significant toxicity in 100% effluent as compared to control.

The complete test report including all corresponding results, statistical analyses, reference toxicity data, daily average flow at the time of sampling and other appropriate supporting documentation, shall be submitted within 60 days following the end of each test period to the Toxicity Testing Unit. A summary page of the test results for the invertebrate and vertebrate species indicating TUa, 48 hr LC50 or 48 hr EC50 for Acute tests and/or TUc, NOEC, IC25, and most sensitive endpoints for Chronic tests, should also be included at the beginning of the test report.

WET Testing Action Level Exceedances - If an action level is exceeded then the Department may require the permittee to conduct additional WET testing including Acute and/or Chronic tests. Additionally, the permittee may be required to perform a Toxicity Reduction Evaluation (TRE) in accordance with Department guidance. If such additional testing or performance of a TRE is necessary, the permittee shall be notified in writing by the Regional Water Engineer. The written notification shall include the reason(s) why such testing or a TRE is required.

# MINI PRETREATMENT PROGRAM

The permittee previously performed the actions described in 1-4 below in order to develop a mini pretreatment program:

1. Industrial Survey
   The permittee submitted the results of an industrial survey.

2. Develop Procedures
   The permittee submitted documentation of procedures for obtaining and ensuring compliance with applicable standards. Such procedures include requirements and schedules for discharge permits, industrial self-monitoring, compliance monitoring of industries by the permittee, on-going POTW monitoring, and an enforcement program. Such procedures are equivalent to procedures described or referenced in the document entitled Introduction to the National Pretreatment Program, USEPA, February, 1999. (www.epa.gov/npdes/pubs/final99.pdf)

3. Treatment Plant/Industry Monitoring
   The permittee submitted the results of industrial and POTW monitoring and a completed Fast Report on Significant Industries forms (FROSIs) for all significant industrial users (SIUs).

4. Local Sewer Use Law
   The permittee submitted a draft local sewer use law equivalent to the DEC Model Sewer Use Law, NYSDEC, 1994. Local limits for substance capable of causing SPDES permit violations, endangering municipal employees or limiting sludge disposal options were included in the local law. Such limits were developed in accordance with document entitled Guidance Manual on the Development and Implementation of Local Discharge Limitations Under the Pretreatment Program USEPA November, 1987.

   After approval by the Department in February 1999, the permittee submitted a copy of the enacted Law accompanied by proof of enactment.

Therefore, the permittee shall continue to implement the procedures developed in accordance with 2. above and approved by the Department. At a minimum, the following activities shall continue to be undertaken by the permittee:

1. Issue permits including limitations, monitoring requirements, and reporting requirements to its significant industrial users.
2. Enforce categorical pretreatment standards promulgated by the USEPA pursuant to Section 307 (b) and c of the Act and the local limits set forth in the POTW's local sewer use law.
3. Carry out inspections and monitoring of significant industrial users to determine compliance with categorical standards and local limits.
4. Undertake enforcement actions in accordance with Department approved procedures.

On **July 28th** of each year, the permittee shall submit completed Fast Report On Significant Industries forms (FROSIs) for each SIU to the Department. Every third year, the permittee shall submit Industrial Chemical Survey forms completed by all SIUs to the Department. At the same time the permittee shall notify the Department of any proposed significant changes to its implementing procedures or local sewer use law.

All pretreatment reports shall be submitted to the Regional Water Engineer.

# STORM WATER POLLUTION PREVENTION PLAN FOR POTWs WITH STORMWATER OUTFALLS

1. General - The Department has determined that stormwater discharges from POTWs with design flows at or above 1 mgd shall be covered under the SPDES permit. If the permittee has already submitted a Notice of Intent to the Department for coverage under the General Storm Water permit, the permittee shall submit a Notice of Termination to the Department upon receipt of this final SPDES permit containing the requirement to develop a SWPPP.

The permittee is required to develop, maintain, and implement a Storm Water Pollutant Prevention Plan (SWPPP) to prevent releases of significant amounts of pollutants to the waters of the State through plant site runoff; spillage and leaks; sludge or waste disposal; and other stormwater discharges including, but not limited to, drainage from raw material storage.

The SWPPP shall be documented in narrative form and shall include the 13 minimum elements below and plot plans, drawings, or maps necessary to clearly delineate the direction of stormwater flow and identify the conveyance, such as ditch, swale, storm sewer or sheet flow, and receiving water body. Other documents already prepared for the facility such as a Safety Manual or a Spill Prevention, Control and Countermeasure (SPCC) plan may be used as part of the SWPPP and may be incorporated by reference. A copy of the current SWPPP shall be submitted to the Department as required in item (2.) below and a copy must be maintained at the facility and shall be available to authorized Department representatives upon request.

2. Compliance Deadlines - The initial completed SWPPP shall be submitted by **EDPM + 6 months** to the Regional water Engineer. The SWPPP shall be implemented within 6 months of submissions, unless a different time frame is approved by the Department. The SWPPP shall be reviewed annually and shall be modified whenever: (a) changes at the facility materially increase the potential for releases of pollutants; (b) actual releases indicate the SWPPP is inadequate, or (c) a letter from the Department identifies inadequacies in the SWPPP. The permittee shall certify in writing, as an attachment to the December Discharge Monitoring Report (DMR), that the annual review has been completed. All SWPPP revisions (with the exception of minimum elements - see item (4.B.) below) must be submitted to the Regional Water Engineer within 30 days. Note that the permittee is not required to obtain Department approval of the SWPPP (or of any minimum elements) unless notified otherwise. Subsequent modifications to or renewal of this permit does not reset or revise these eadlines unless a new deadline is set explicitly by such permit modification or renewal.

3. Facility Review - The permittee shall review all facility components or systems (including but not limited to material storage areas; in-plant transfer, process, and material handling areas; loading and unloading operations; storm water, erosion, and sediment control measures; process emergency control systems; and sludge and waste disposal areas) where materials or pollutants are used, manufactured, stored or handled to evaluate the potential for the release of pollutants to the waters of the State. In performing such an evaluation, the permittee shall consider such factors as the probability of equipment failure or improper operation, cross-contamination of storm water by process materials, settlement of facility air emissions, the effects of natural phenomena such as freezing temperatures and precipitation, fires, and the facility's history of spills and leaks. The relative toxicity of the pollutant shall be considered in determining the significance of potential releases.

The review shall address all substances present at the facility that are identified in Tables 6-10 of SPDES application Form NY-2C (available at *http://www.dec.state.ny.us/website/dcs/permits/olpermits/form2c.pdf*) as well as those that are required to be monitored by the SPDES permit.

4. A. 13 Minimum elements - Whenever the potential for a release of pollutants to State waters is determined to be present, the permittee shall identify Best Management Practices (BMPs) that have been established to prevent or minimize such potential releases. Where BMPs are inadequate or absent, appropriate BMPs shall be established. In selecting appropriate BMPs, the permittee shall consider good industry practices and, where appropriate, structural measures such as secondary containment and erosion/sediment control devices and practices. USEPA guidance for development of minimum elements of the SWPPP and BMPs is available in the September 1992 manual *Storm Water Management for Industrial Activities,* EPA 832-R-92-006 (available on-line at http://nepis.epa.gov/pubtitleOW.htm) At a minimum, the plan shall include the following elements:

1. Pollution Prevention Team
2. Reporting of BMP Incidents
3. Risk Identification & Assessment
4. Employee Training
5. Inspections and Records
6. Security
7. Preventive Maintenance
8. Good Housekeeping
9. Materials/Waste Handling, Storage, & Compatibility
10. Spill Prevention & Response
11. Erosion & Sediment Control
12. Management of Runoff
13. Street Sweeping

Note that for some facilities, especially those with few employees, some of the above may not be applicable. It is acceptable in these cases

to indicate "Not Applicable" for the portion(s) of the SWPPP that do not apply to your facility, along with an explanation, for instance if street sweeping did not apply because no streets exist at the facility.

B. Stormwater Pollution Prevention Plans (SWPPPs) Required for Discharges of Stormwater From Construction Activity to Surface Waters - As part of the erosion of and sediment control element, a SWPPP shall be developed prior to the initiation of any site disturbance of one acre or more of uncontaminated area. Uncontaminated area means soils or groundwater which are free of contamination by any toxic or non-conventional pollutants identified in Tables 6-10 of SPDES application Form NY-2C. Disturbance of any size contaminated area(s) and the resulting discharge of contaminated stormwater is not authorized by this permit unless the discharge is under State or Federal oversight as part of a remedial program or after review by the Regional Water Engineer; nor is such discharge authorized by any SPDES general permit for stormwater discharges. SWPPPs are not required for discharges of stormwater from construction activity to groundwaters.

The SWPPP shall conform to the *New York Standards and Specifications for Erosion and Sediment Control* and *New York State Stormwater Management Design Manual,* unless a variance has been obtained from the Regional Water Engineer, and to any local requirements. The permittee shall submit a copy of the SWPPP and any amendments thereto to the local governing body and any other authorized agency having jurisdiction or regulatory control over the construction activity at least 30 days prior to soil disturbance. The SWPPP shall also be submitted to the Regional Water Engineer if contamination, as defined above, is involved and the permittee must obtain a determination of any SPDES permit modifications and/or additional treatment which may be required prior to soil disturbance. Otherwise, the SWPPP shall be submitted to the Department only upon request. When a SWPPP is required, a properly completed *Notice of Intent* (NOI) form shall be submitted (available at *www.dec.state.ny.us/website/dow/toolbox/swforms.html*) prior to soil disturbance. Note that submission of a NOI is required for informational purposes; the permittee is not eligible for and will not obtain coverage under any SPDES general permit for stormwater discharges, nor are any additional permit fees incurred. SWPPPs must be developed and submitted for subsequent site disturbances in accordance with the above requirements. The permittee is responsible for ensuring that the provisions of each SWPPP are properly implemented.

# MERCURY MINIMIZATION PROGRAM

1. General - The permittee shall develop, implement, and maintain a Mercury Minimization Program (MMP). The MMP is required because the 50 ng/L permit limit exceeds the statewide water quality based effluent limit (WQBEL) of 0.70 nanograms/liter (ng/L) for Total Mercury. The goal of the MMP will be to reduce mercury effluent levels in pursuit of the WQBEL.

2. MMP Elements - The MMP shall be documented in narrative form and shall include any necessary drawings or maps. Other related documents already prepared for the facility may be used as part of the MMP and may be incorporated by reference. As a minimum, the MMP shall include an on-going program consisting of: periodic monitoring designed to quantify and, over time, track the reduction of mercury; an acceptable control strategy for reducing mercury discharges via cost-effective measures, which may include more stringent control of tributary waste streams; and submission of annual status reports.

A. Monitoring - The permittee shall conduct periodic monitoring designed to quantify and, over time, track the reduction of mercury. All permit-related wastewater and stormwater mercury compliance point (outfall) monitoring shall be performed using EPA Method 1631. Use of EPA Method 1669 during sample collection is recommended. Unless otherwise specified, all samples shall be grabs. Monitoring at influent and other locations tributary to compliance points may be performed using either EPA Methods 1631 or 245.7. Monitoring of raw materials, equipment, treatment residuals, and other non-wastewater/non-stormwater substances may be performed using other methods as appropriate. Monitoring shall be coordinated so that the results can be effectively compared between internal locations and final outfalls. Minimum required monitoring is as follows:

i. Sewage Treatment Plant Influent & Effluent, and Type II SSO Outfalls - Samples at each of these locations must be collected in accordance with the minimum frequency specified on the mercury permit limits page.

ii. Key Locations in the Collection System and Potential Significant Mercury Sources - The minimum monitoring frequency at these locations shall be semi-annual. Monitoring of properly treated dental facility discharges is not required.

iii. Hauled Wastes - Hauled wastes which may contain significant mercury levels must be periodically tested prior to acceptance to ensure compliance with pretreatment/local limits requirements.

iv. Additional monitoring must be completed as may be required elsewhere in this permit or upon Department request.

B. Control Strategy - An acceptable control strategy is required for reducing mercury discharges via cost-effective measures, including but not limited to more stringent control of industrial users and hauled wastes. The control strategy will become enforceable under this permit and shall contain the following minimum elements:

i. Pretreatment/Local Limits - The permittee shall evaluate and revise current requirements in pursuit of the goal.

ii. Periodic Inspection - The permittee must inspect users as necessary to support the MMP. Each dental facility shall be inspected at least once every five years to verify compliance with the wastewater treatment operation, maintenance, and notification elements of 6NYCRR Part 374.4. Other mercury sources shall also be inspected once every five years. Alternatively, the permittee may develop an outreach program which informs these users of their responsibilities once every five years and is supported by a subset of site inspections. Monitoring shall be performed as above.

iii. Systems with CSO & Type II SSO Outfalls - Priority shall be given to controlling mercury sources upstream of CSOs and Type II SSOs through mercury reduction activities and/or controlled-release discharge. Effective control is necessary to avoid the need for the Department to establish mercury permit limits at these outfalls.

iv. A file shall be maintained containing all MMP documentation, including the dental forms required by 6NYCRR Part 374.4, which shall be available for review by DEC representatives.

C. Annual Status Report - An annual status report shall be submitted to the Regional Water Engineer and to the Bureau of Water Permits summarizing: (a) all MMP monitoring results for the previous year; (b) a list of known and potential mercury sources; (c) all action undertaken pursuant to the strategy during the previous year; (d) actions planned for the upcoming year, and (e) progress toward the goal. The first annual status report is due one year after the permit is modified to include the MMP requirement and follow-up status reports are due annually thereafter. A file shall be maintained containing all MMP documentation, including the dental forms required by 6NYCRR Part 374.4, which shall be available for review by DEC representatives. Copies shall be provided upon request.

3. MMP Modification - The MMP shall be modified whenever: (a)changes at the facility or within the collection system increase the potential for mercury discharges; (b) actual discharges exceed 50 ng/L; (c) a letter from the Department identifies inadequacies in the MMP; or, (d) pursuant to a permit modification.

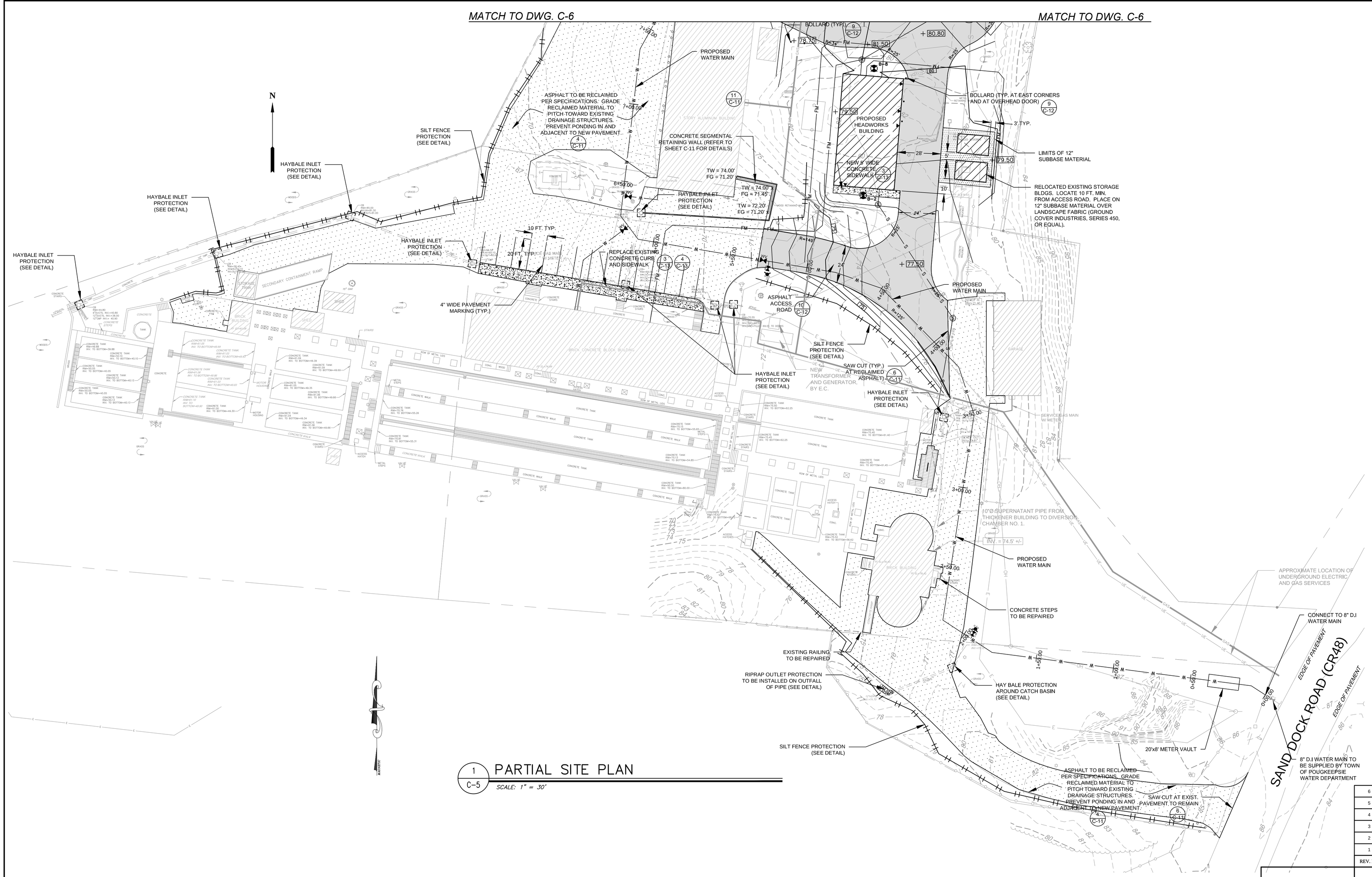


1 / C-5 PARTIAL SITE PLAN

SCALE: 1" = 30'

GRAPHIC SCALE

30 0 15 30 60

( IN FEET )

1 inch = 30 ft.

| REV. No. | DESCRIPTION | DATE | BY |
|---|---|---|---|
| 6 | BIDDING REVISION | 04/04/16 | MA |
| 5 | ISSUED FOR FINAL REVIEW | 03/06/2015 | MA |
| 4 | ISSUED FOR 90% REVIEW | 11/26/2014 | MA |
| 3 | DEC SUBMISSION | 9/30/14 | MA |
| 2 | DESIGN REVIEW REVISIONS | 9/05/14 | MA |
| 1 | ISSUED FOR 30%REVIEW | 6/30/14 | MA |

# ARLINGTON WASTEWATER TREATMENT PLANT UPGRADE

TOWN OF POUGHKEEPSIE DUTCHESS COUNTY, NY

## PARTIAL SITE PLAN - 1

IT IS A VIOLATION OF NEW YORK STATE EDUCATION LAW FOR ANY PERSON TO ALTER THESE PLANS, SPECIFICATIONS OR REPORTS IN ANY WAY, UNLESS ACTING UNDER THE DIRECTION OF A LICENSED PROFESSIONAL ENGINEER.


MORRIS ASSOCIATES,
ENGINEERING AND SURVEYING CONSULTANTS, PLLC
9 Elks Lane, Poughkeepsie, New York 12601
Phone No. (845) 454-3411
Fax No. (845) 473-1962
64 Green Street Hudson, New York 12534
Phone No. (518) 828-2300
Fax No. (518) 828-3963


| DATE | SCALE | DESIGNED BY: MA - RJJ / DRAWN BY: MA / CHECKED BY: MA - RJJ / JFL | FILE No. | DRAWING No. |
|---|---|---|---|---|
| 01/15/14 | AS SHOWN | | 60401.30 | C-5 |

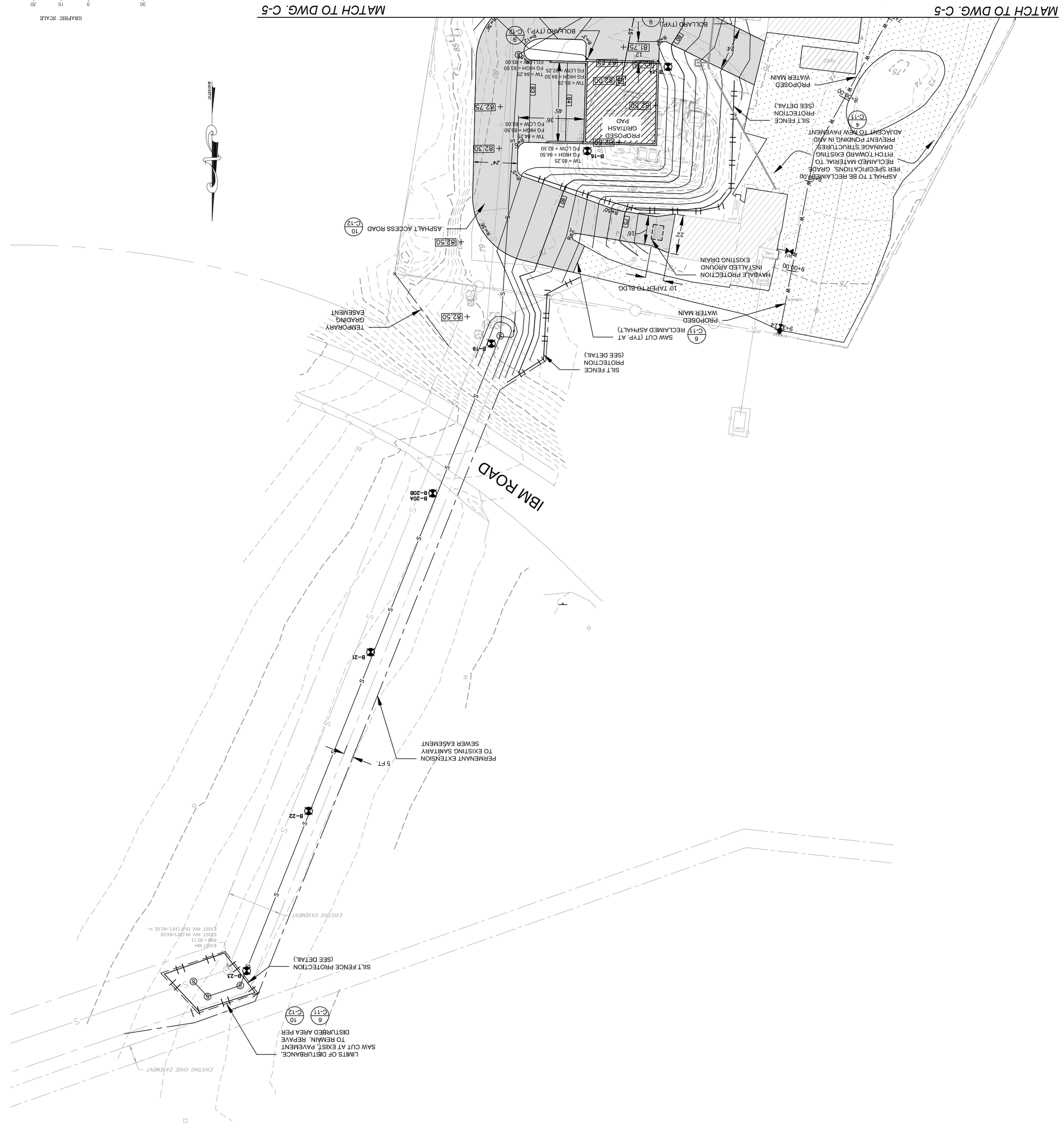


1 PARTIAL SITE PLAN
C-6
SCALE: 1" = 30'

IT IS A VIOLATION OF NEW YORK STATE EDUCATION LAW FOR ANY PERSON TO ALTER THESE PLANS, SPECIFICATIONS OR REPORTS IN ANY WAY, UNLESS ACTING UNDER THE DIRECTION OF A LICENSED PROFESSIONAL ENGINEER.

**MORRIS ASSOCIATES,**
ENGINEERING AND SURVEYING CONSULTANTS, PLLC
9 Elks Lane, Poughkeepsie, New York 12601
Phone No. (845) 454-2411
Fax No. (845) 473-1942
44 Green Street
Hudson, New York 12534
Phone No. (518) 828-2300
Fax No. (518) 828-3943

| DATE | SCALE | DESIGNED BY: MA - RJJ |
|---|---|---|
| 01/15/14 | AS SHOWN | DRAWN BY: MA |
| | | CHECKED BY: MA - RJJ / JFL |

FILE No. 6040L30
DRAWING No. C-6

# PARTIAL SITE PLAN - 2

TOWN OF POUGHKEEPSIE DUTCHESS COUNTY, NY

## ARLINGTON WASTEWATER TREATMENT PLANT UPGRADE

| REV. No. | DESCRIPTION | DATE | BY |
|---|---|---|---|
| 6 | BIDDING REVISION | 04/04/16 | MA |
| 5 | ISSUED FOR FINAL REVIEW | 03/06/2015 | MA |
| 4 | ISSUED FOR 90% REVIEW | 11/26/2014 | MA |
| 3 | DEC SUBMISSION | 9/30/14 | MA |
| 2 | DESIGN REVIEW REVISIONS | 9/05/14 | MA |
| 1 | ISSUED FOR 30%REVIEW | 6/30/14 | MA |

MATCH TO DWG. C-8

MATCH TO DWG. C-8

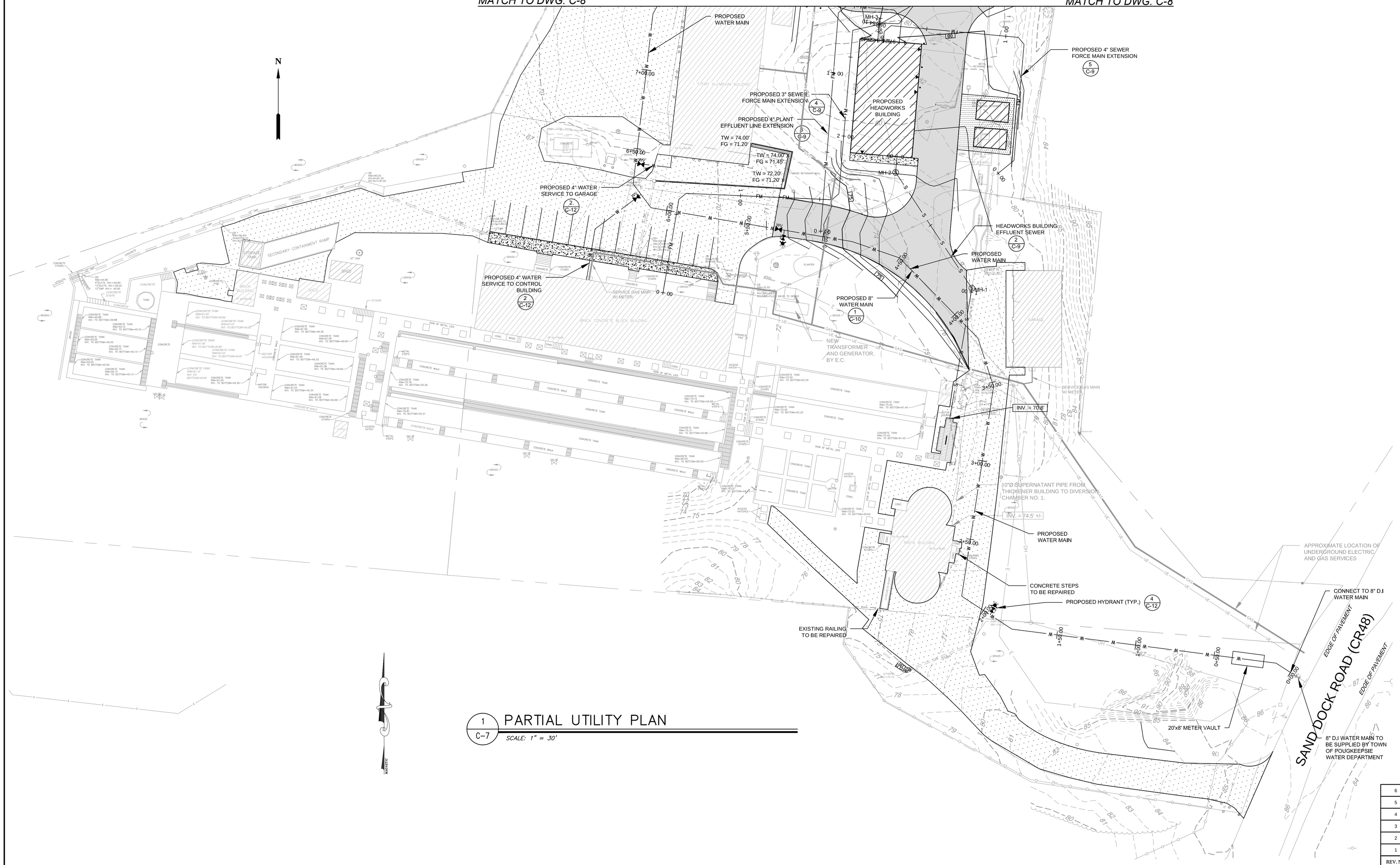


## 1 C-7 PARTIAL UTILITY PLAN

SCALE: 1" = 30'

| REV. No. | DESCRIPTION | DATE | BY |
|---|---|---|---|
| 6 | BIDDING REVISION | 04/04/16 | MA |
| 5 | ISSUED FOR FINAL REVIEW | 03/06/2015 | MA |
| 4 | ISSUED FOR 90% REVIEW | 11/26/2014 | MA |
| 3 | DEC SUBMISSION | 9/30/14 | MA |
| 2 | DESIGN REVIEW REVISIONS | 9/05/14 | MA |
| 1 | ISSUED FOR 30%REVIEW | 6/30/14 | MA |

# ARLINGTON WASTEWATER TREATMENT PLANT UPGRADE

TOWN OF POUGHKEEPSIE DUTCHESS COUNTY, NY

## PARTIAL UTILITY PLAN - 1

GRAPHIC SCALE

30 0 15 30 60

( IN FEET )

1 inch = 30 ft.

IT IS A VIOLATION OF NEW YORK STATE EDUCATION LAW FOR ANY PERSON TO ALTER THESE PLANS, SPECIFICATIONS OR REPORTS IN ANY WAY, UNLESS ACTING UNDER THE DIRECTION OF A LICENSED PROFESSIONAL ENGINEER.

MORRIS ASSOCIATES,
ENGINEERING AND SURVEYING CONSULTANTS, PLLC
9 Elks Lane, Poughkeepsie, New York 12601
Phone No. (845) 454-3411
Fax No. (845) 473-1962
64 Green Street Hudson, New York 12534
Phone No. (518) 828-2300
Fax No. (518) 828-3963

| DATE | SCALE | DESIGNED BY: MA - RJJ | FILE No. | DRAWING No. |
|---|---|---|---|---|
| 01/15/14 | AS SHOWN | DRAWN BY: MA<br>CHECKED BY: MA - RJJ / JFL | 60401.30 | C-7 |

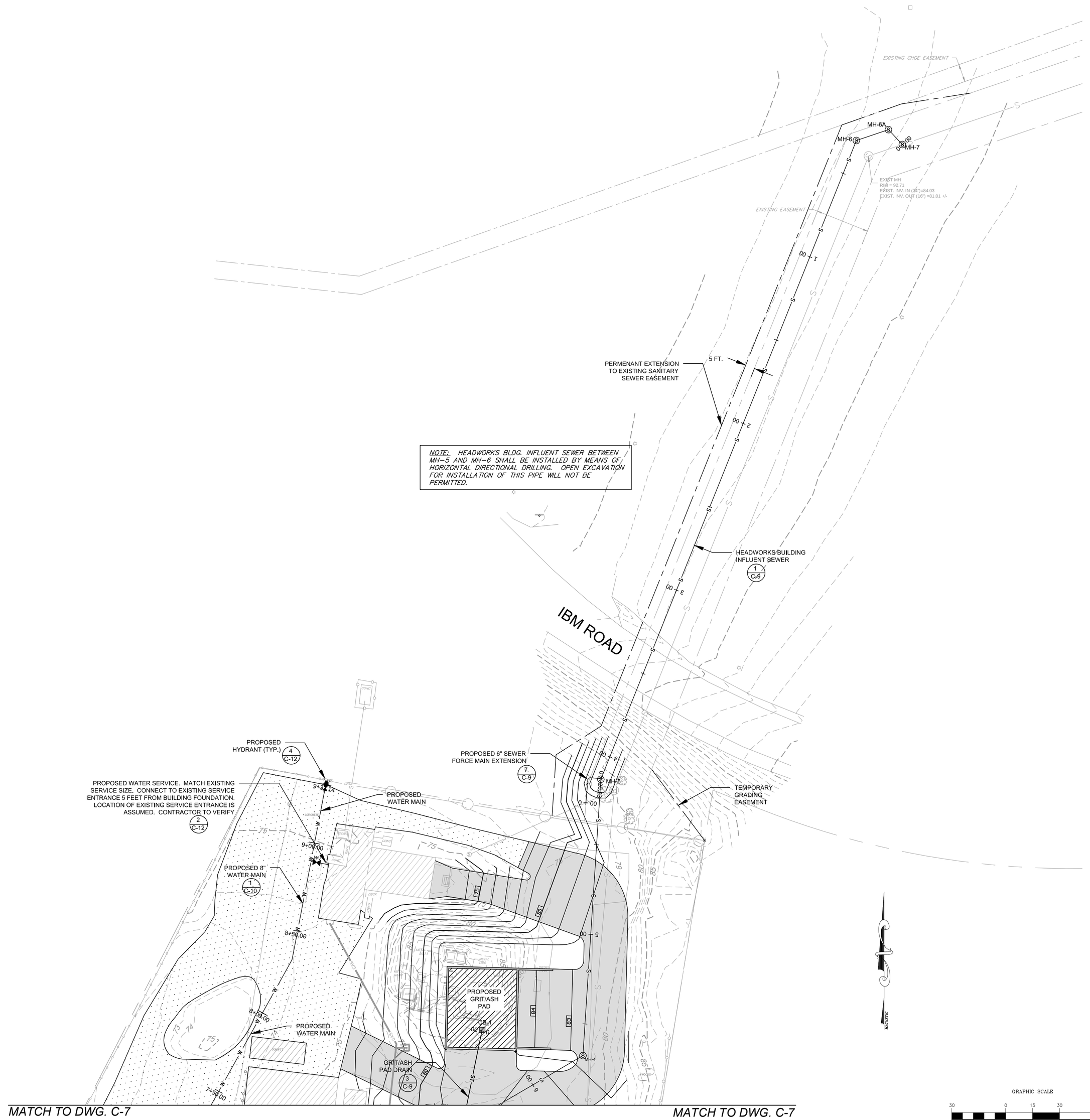


1 C-8 PARTIAL UTILITY PLAN

SCALE: 1" = 30'

GRAPHIC SCALE

30 0 15 30 60

( IN FEET )

1 inch = 30 ft.

| REV. No. | DESCRIPTION | DATE | BY |
|---|---|---|---|
| 6 | BIDDING REVISION | 04/04/16 | MA |
| 5 | ISSUED FOR FINAL REVIEW | 03/06/2015 | MA |
| 4 | ISSUED FOR 90% REVIEW | 11/26/2014 | MA |
| 3 | DEC SUBMISSION | 9/30/14 | MA |
| 2 | DESIGN REVIEW REVISIONS | 9/05/14 | MA |
| 1 | ISSUED FOR 30%REVIEW | 6/30/14 | MA |

# ARLINGTON WASTEWATER TREATMENT PLANT UPGRADE

TOWN OF POUGHKEEPSIE DUTCHESS COUNTY, NY

## PARTIAL UTILITY PLAN - 2

IT IS A VIOLATION OF NEW YORK STATE EDUCATION LAW FOR ANY PERSON TO ALTER THESE PLANS, SPECIFICATIONS OR REPORTS IN ANY WAY, UNLESS ACTING UNDER THE DIRECTION OF A LICENSED PROFESSIONAL ENGINEER.

MORRIS ASSOCIATES,
ENGINEERING AND SURVEYING CONSULTANTS, PLLC
9 Elks Lane, Poughkeepsie, New York 12601
Phone No. (845) 454-3411
Fax No. (845) 473-1962
64 Green Street Hudson, New York 12534
Phone No. (518) 828-2300
Fax No. (518) 828-3963

| DATE | SCALE | DESIGNED BY: MA - RJJ / DRAWN BY: MA / CHECKED BY: MA - RJJ / JFL | FILE No. | DRAWING No. |
|---|---|---|---|---|
| 01/15/14 | AS SHOWN | | 60401.30 | C-8 |

INCREASE VAULT WIDTH TO 8', SEE NOTE BELOW

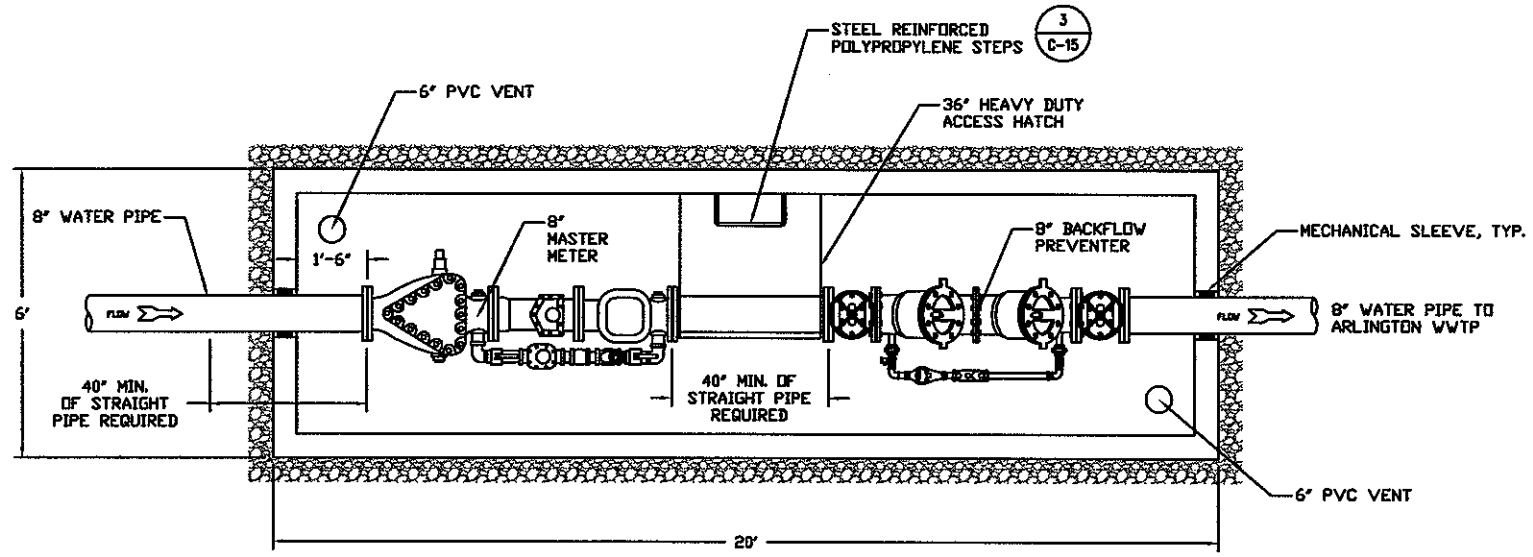


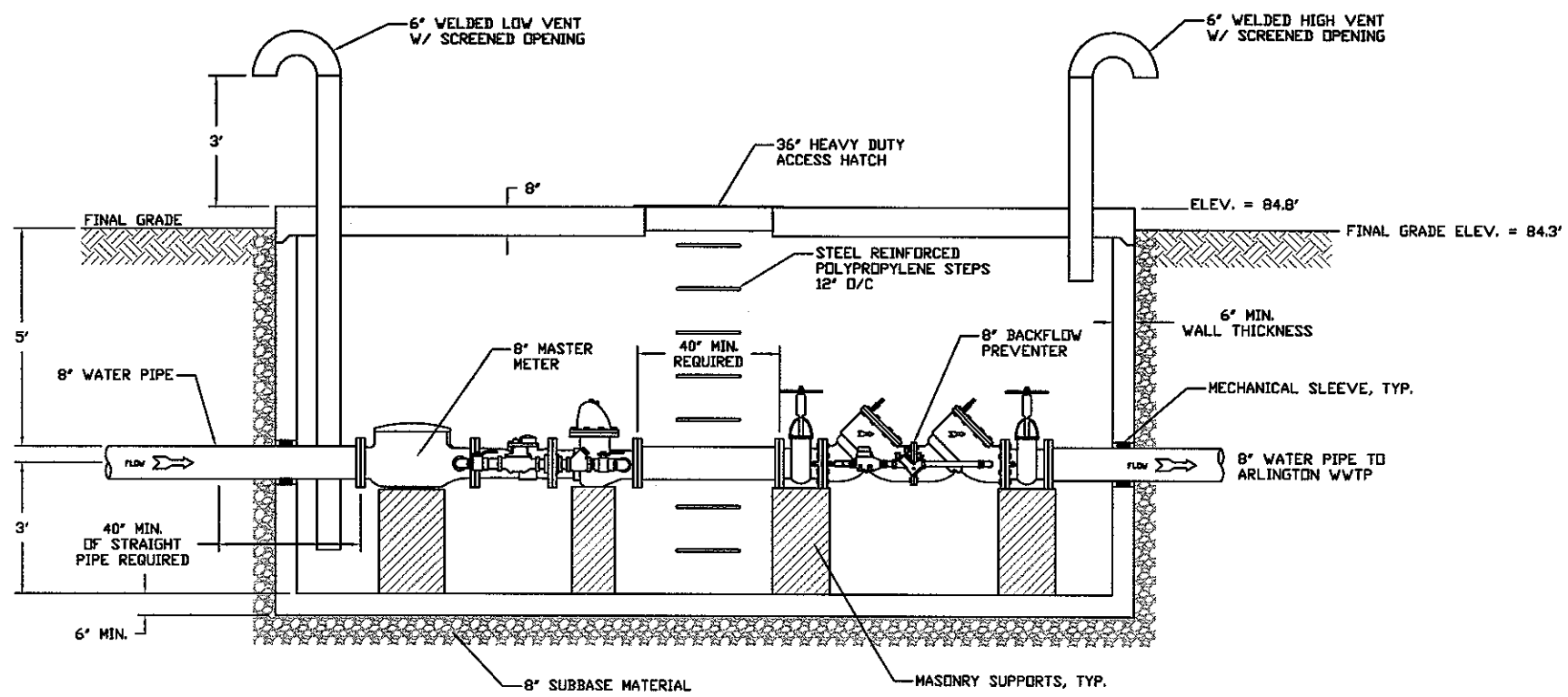


1 / E-1 **METER PIT**

*SCALE = ¼" = 1'-0"*

NOTE: VAULT DIMENSIONS SHALL BE REVISED TO 20' LONG BY 8' WIDE TO INCREASE WALL CLEARANCE. MAINTAIN CENTERLINE OF EQUIPMENT AS SHOWN, ADDING 1' OF WIDTH IN EACH DIRECTION.


**MORRIS ASSOCIATES, P.L.L.C.**
ENGINEERING CONSULTANTS
9 Elks Lane, Poughkeepsie, New York 12601, Phone No. (845) 454-3411, Fax No. (845) 473-1962
389 Fairview Ave., Hudson, New York 12534, Phone No. (518) 828-2300, Fax No. (518) 828-3963


| DATE | SCALE | DESIGNED BY: | FILE No. |
|---|---|---|---|
| 04/01/07 | AS NOTED | DRAWN BY: | 60401.27 |
| | | CHECKED BY: | |

| REV. No. | DESCRIPTION | DATE | BY |
|---|---|---|---|

**ARLINGTON WASTEWATER TREATMENT PLANT**

TOWN OF POUGHKEEPSIE — DUTCHESS COUNTY, NY

**MISCELLANEOUS DETAILS**

DRAWING C-10 REPLACEMENT — DWG C-16E

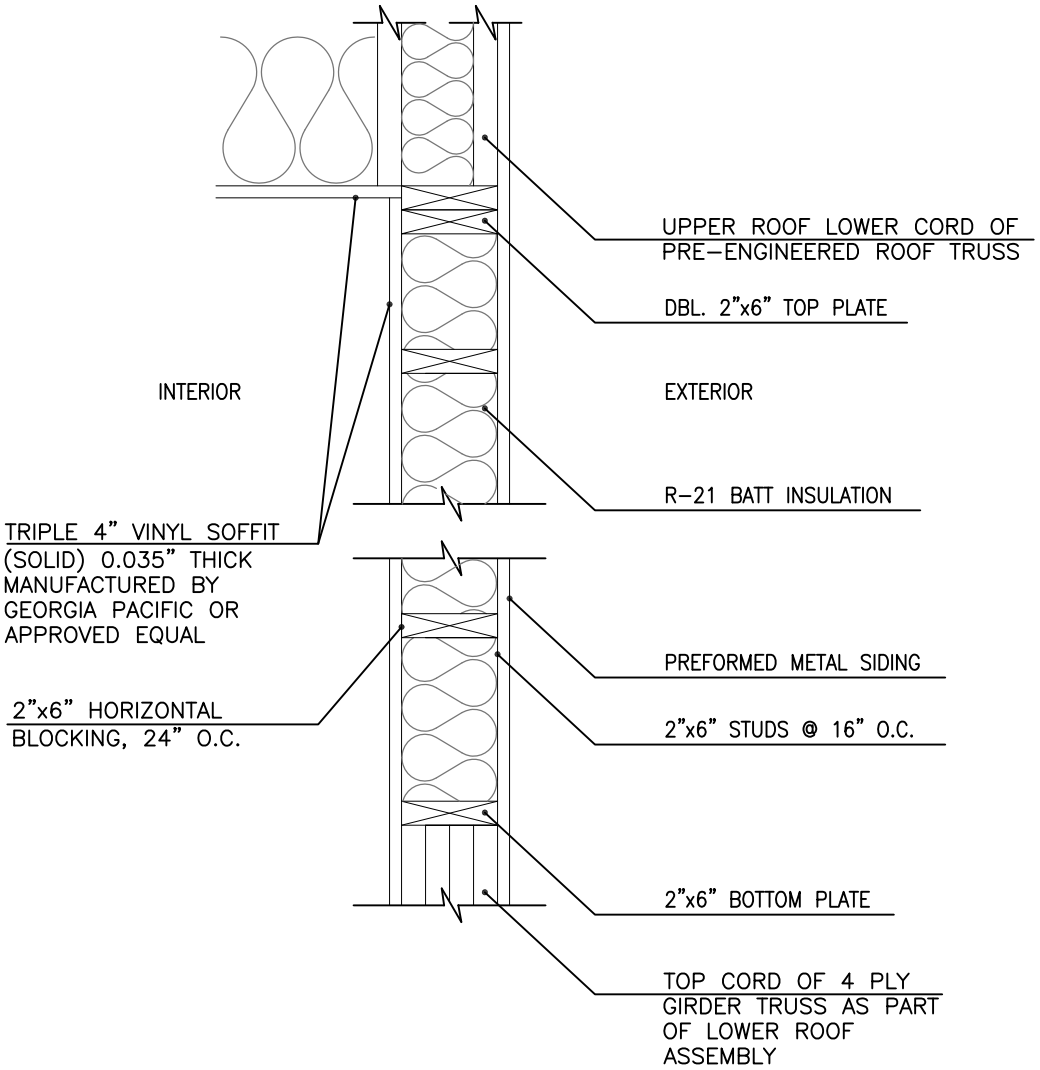


**MORRIS ASSOCIATES, PLLC**
ENGINEERING CONSULTANTS
9 Elks Lane, Poughkeepsie, New York 12601
Phone No. (845) 454-3411
Fax No. (845) 473-1962
64 Green Street, Suite 1, Hudson, New York 12534
Phone No. (518) 828-2300
Fax No. (518) 828-3963

| REV. No. | DESCRIPTION | DATE | BY |
|---|---|---|---|

# ARLINGTON WASTEWATER TREATMENT PLANT UPGRADE

TOWN OF POUGHKEEPSIE — DUTCHESS COUNTY, NY

## ADDENDUM #2
## GABLE END WALL CONSTRUCTION

DWG 1-1

| DATE | SCALE | DESIGNED BY: RJJ | FILE No. |
|---|---|---|---|
| APRIL 2016 | 1" = 1'-0" | DRAWN BY: RJA | 60401.30 |
| | | CHECKED BY: RJJ | |

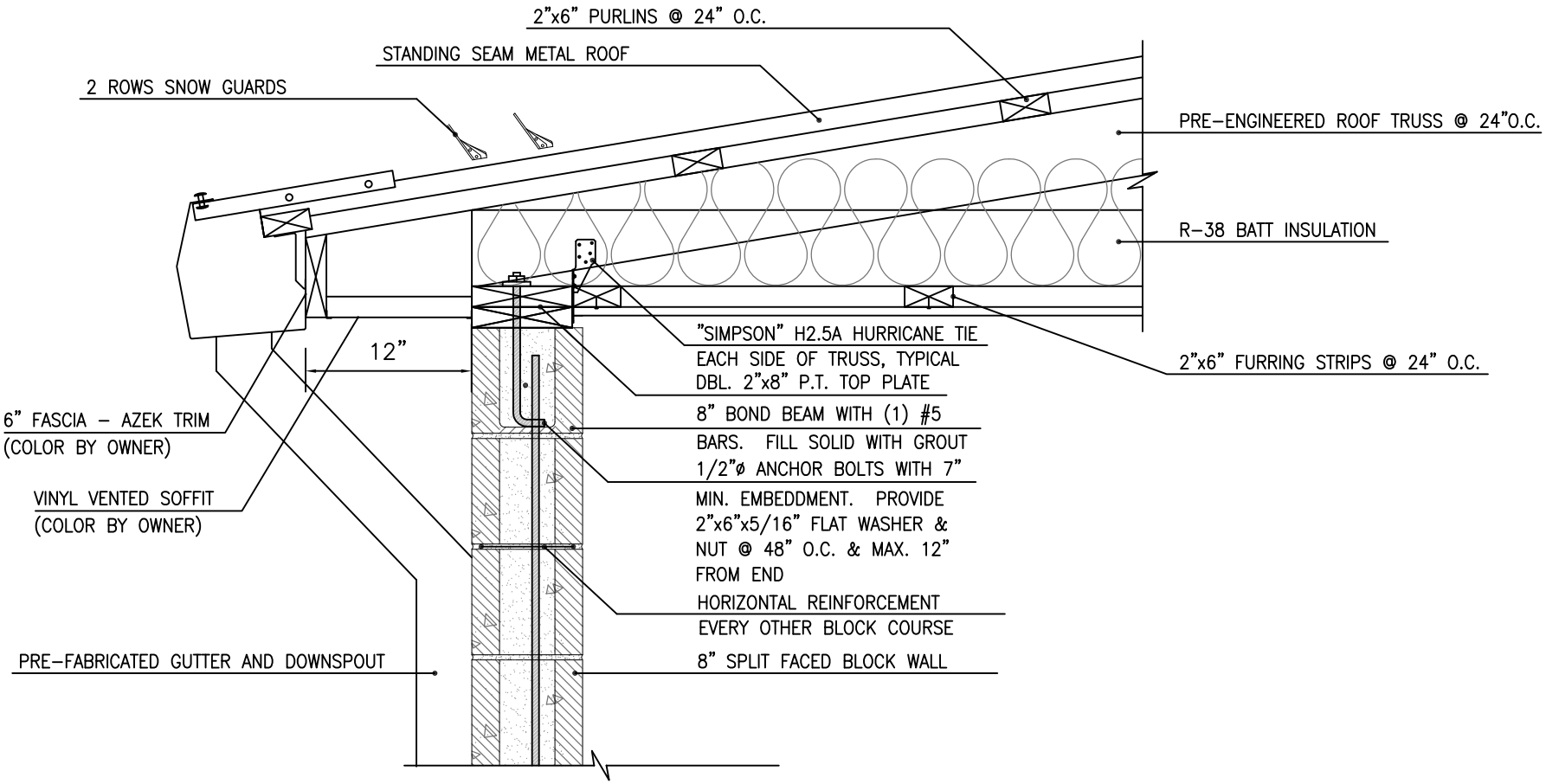


6
G-9

# 8" CMU TO TRUSS ROOF CONNECTION

SCALE: 1" = 1'-0"


**MORRIS ASSOCIATES, PLLC**
ENGINEERING CONSULTANTS
9 Elks Lane, Poughkeepsie, New York 12601
Phone No. (845) 454-3411
Fax No. (845) 473-1962
64 Green Street, Suite 1, Hudson, New York 12534
Phone No. (518) 828-2300
Fax No. (518) 828-3963


| REV. No. | DESCRIPTION | DATE | BY |
|---|---|---|---|

**ARLINGTON WASTEWATER TREATMENT PLANT UPGRADE**

TOWN OF POUGHKEEPSIE — DUTCHESS COUNTY, NY

**ADDENDUM #2**

**8" CMU TO TRUSS ROOF CONNECTION**

DWG 1-1

| DATE | SCALE | DESIGNED BY: RJJ | FILE No. |
|---|---|---|---|
| APRIL 2016 | AS NOTED | DRAWN BY: RJA<br>CHECKED BY: RJJ | 60401.30 |

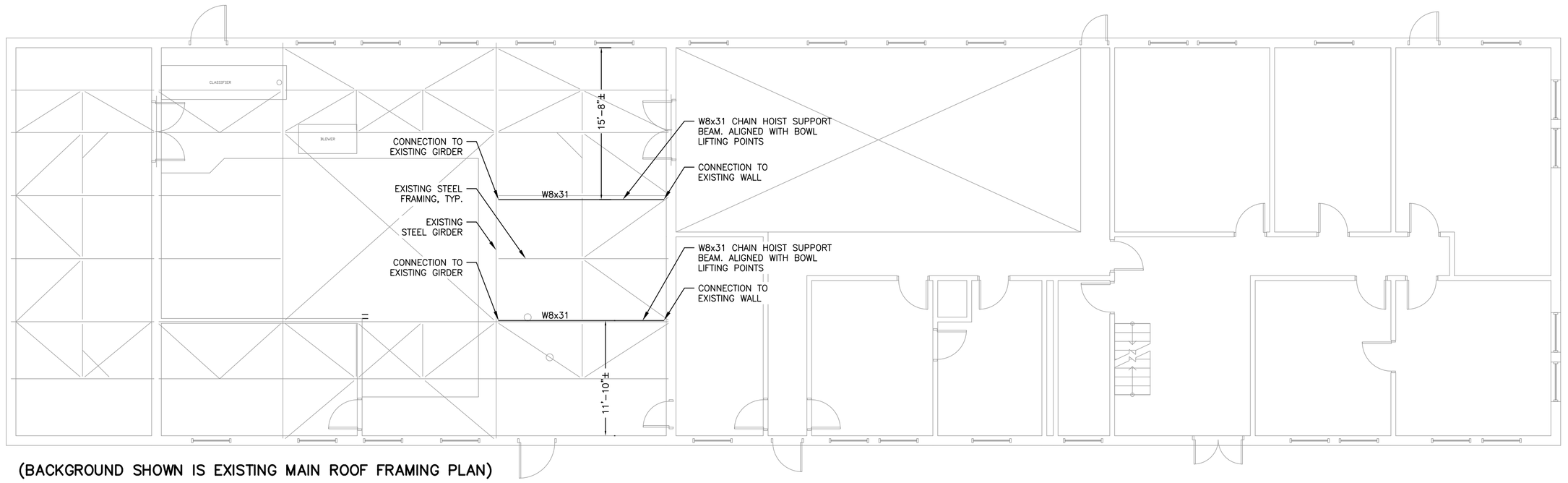


(BACKGROUND SHOWN IS EXISTING MAIN ROOF FRAMING PLAN)

1 / G-45-2 CHAIN HOIST BEAM LOCATION PLAN

*SCALE: 1/8"=1'-0"*

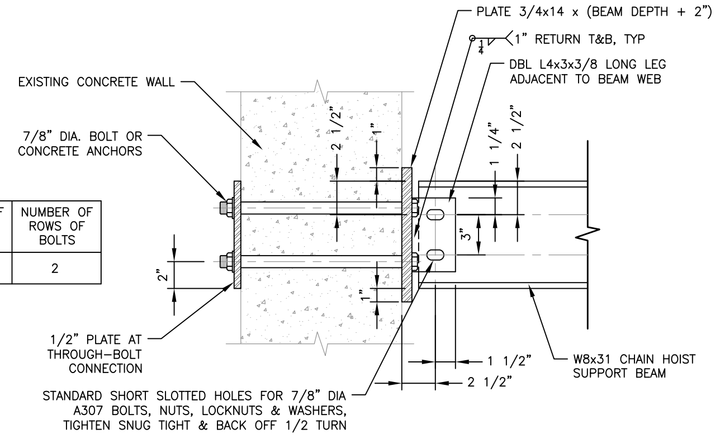


| STEEL BEAM | | NUMBER OF ROWS OF ANCHORS | NUMBER OF ROWS OF BOLTS |
|---|---|---|---|
| SHAPE | DEPTH | | |
| W | 8 | 2 | 2 |

2 / G-45-2 BEAM CONNECTION TO EXISTING WALL

*SCALE: 1 1/2"=1'-0"*

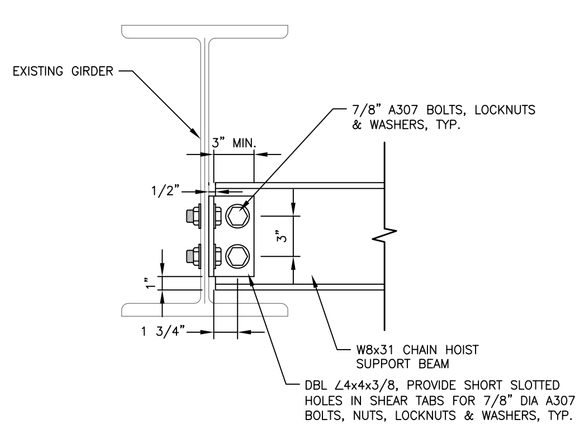


3 / G-45-2 SHEAR CONNECTION TO EXISTING GIRDER

*SCALE: 1 1/2"=1'-0"*

| REV. No. | DESCRIPTION | DATE | BY |
|---|---|---|---|
| 5 | ISSUED FOR FINAL REVIEW | 03/06/2015 | MA |
| 4 | ISSUED FOR 90% REVIEW | 11/26/2014 | MA |
| 3 | DEC SUBMISSION | 9/30/14 | MA |
| 2 | DESIGN REVIEW REVISIONS | 9/05/14 | MA |
| 1 | ISSUED FOR 30%REVIEW | 6/30/14 | MA |

**ARLINGTON WASTEWATER TREATMENT PLANT UPGRADE**

TOWN OF POUGHKEEPSIE DUTCHESS COUNTY, NY

**SLUDGE DEWATERING SUPPORT STRUCTURAL CHAIN HOIST BEAMS**

IT IS A VIOLATION OF NEW YORK STATE EDUCATION LAW FOR ANY PERSON TO ALTER THESE PLANS, SPECIFICATIONS OR REPORTS IN ANY WAY, UNLESS ACTING UNDER THE DIRECTION OF A LICENSED PROFESSIONAL ENGINEER.

**MORRIS ASSOCIATES,**
ENGINEERING AND SURVEYING CONSULTANTS, PLLC
9 Elks Lane, Poughkeepsie, New York 12601
Phone No. (845) 454-3411
Fax No. (845) 473-1962
64 Green Street Hudson, New York 12534
Phone No. (518) 828-2300
Fax No. (518) 828-3963

| DATE | SCALE | | FILE No. | DRAWING No. |
|---|---|---|---|---|
| FEB. 2015 | AS SHOWN | DESIGNED BY: PSM- RJJ<br>DRAWN BY: RJA<br>CHECKED BY: PSM- RJJ / JFL | 60401.30 | G-45-2 |

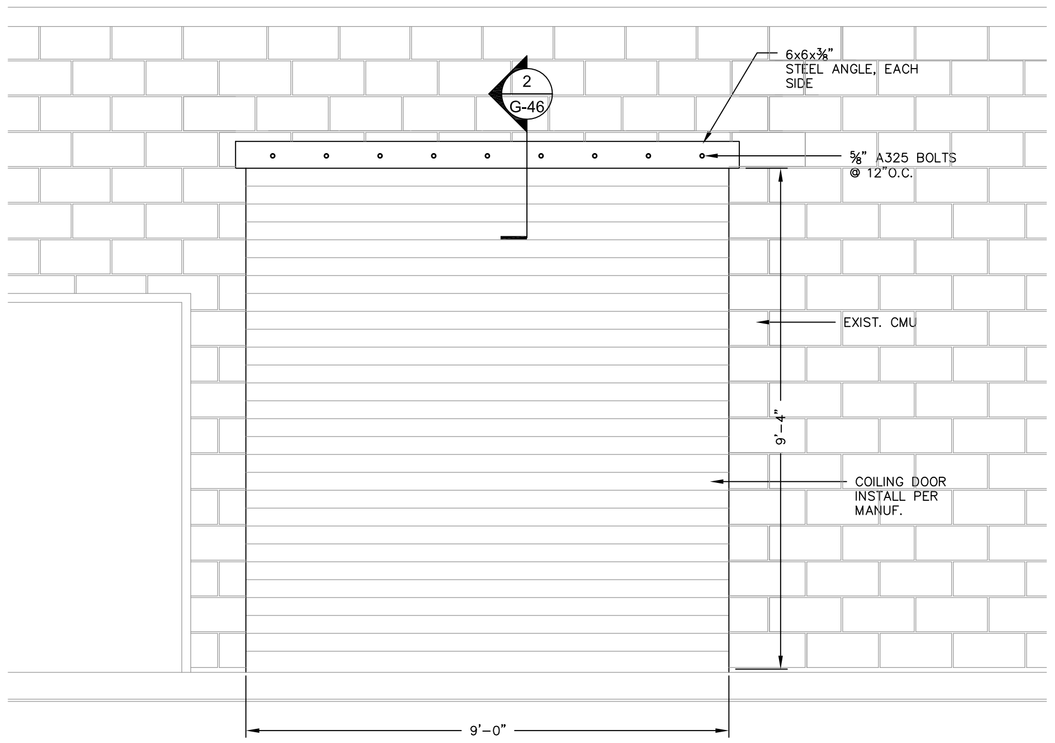


1 G-46 ELEVATION

*SCALE: 1/2"=1'-0"*

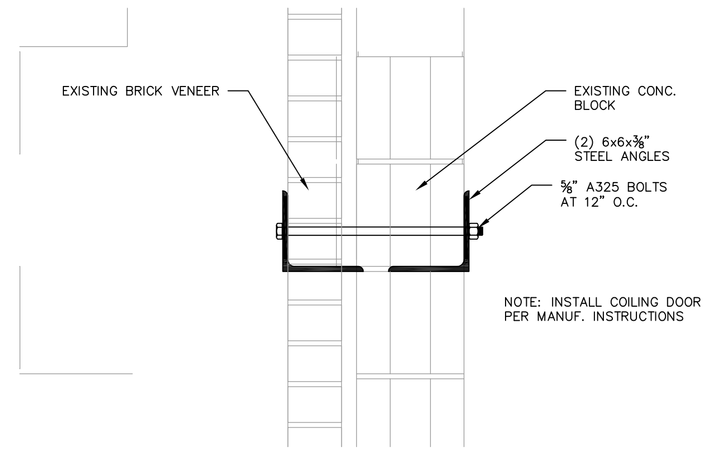


2 G-46 SECTION

*SCALE: 1-1/2"=1'-0"*

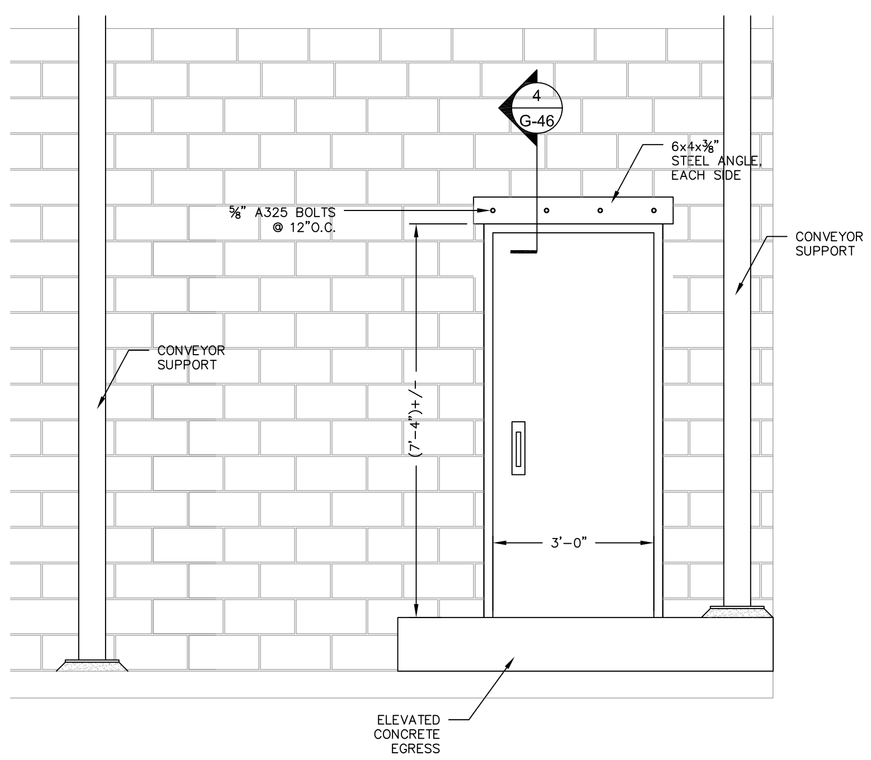


3 G-46 ELEVATION

*SCALE: 1/2"=1'-0"*

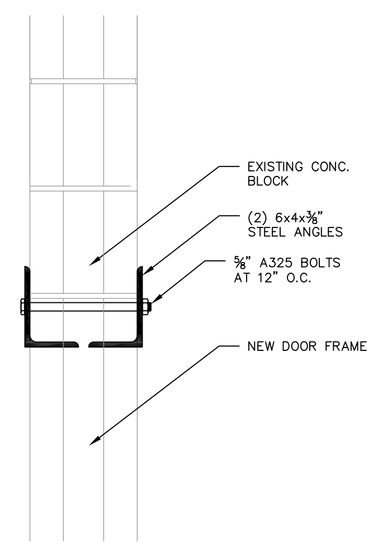


4 G-46 SECTION

*SCALE: 1-1/2"=1'-0"*

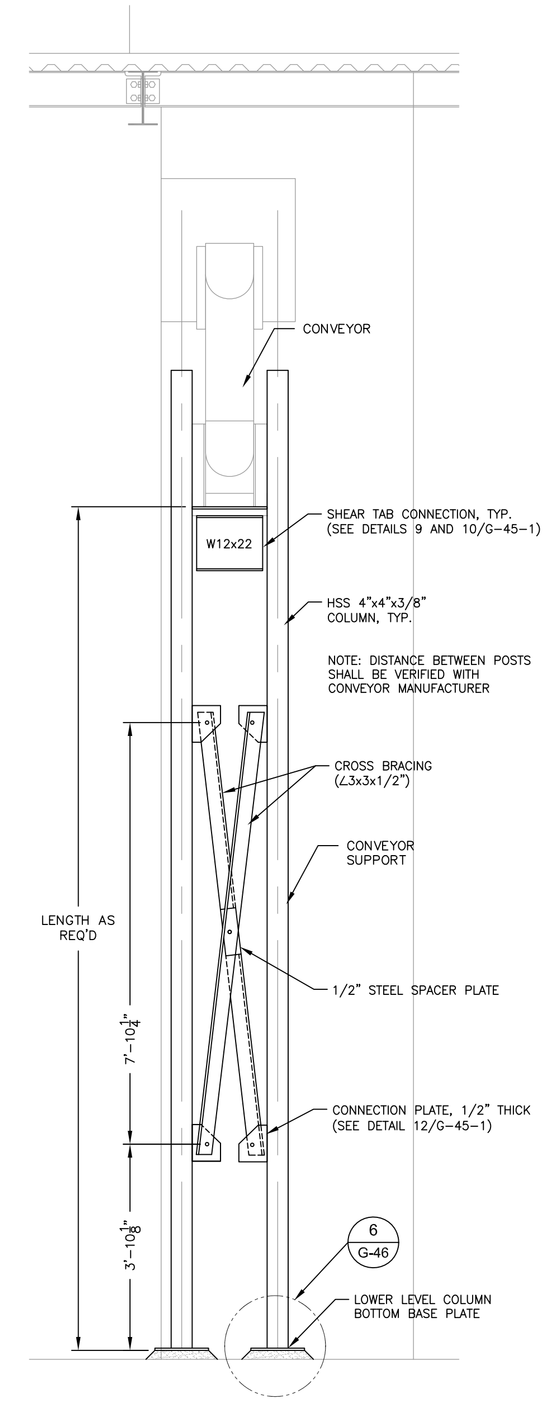


5 G-46 CONVEYOR SUPPORT

*SCALE: 1/2"=1'-0"*

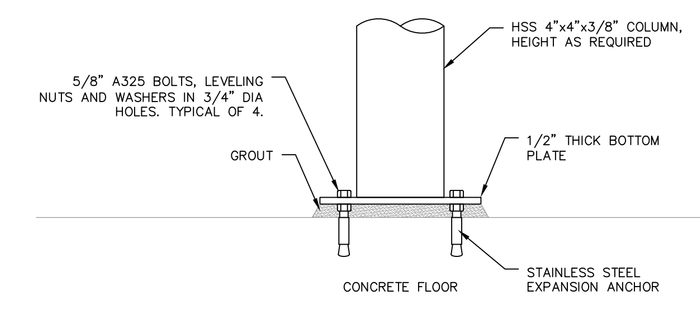


ELEVATION

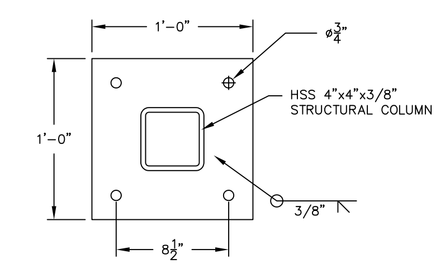


6 G-46 CONVEYOR SUPPORT DETAIL

*SCALE: 1-1/2"=1'-0"*

## DOOR AND HARDWARE SCHEDULE

| NO | LOCATION | DOOR SIZE WIDTH | DOOR SIZE HEIGHT | DOOR SIZE SWING | DOOR MATL | DOOR TYPE | DOOR FINISH | DOOR COLOR | FRAME DETAILS MATL | FRAME DETAILS TYPE | FRAME DETAILS FINISH | FRAME DETAILS COLOR | FRAME DETAILS HEAD | FRAME DETAILS JAMB | FRAME DETAILS SILL | FRAME DETAILS MISC. | HARDWARE * HINGE | HARDWARE * LOCK | HARDWARE * CLOSER | HARDWARE * EXIT DEVICE | HARDWARE * PUSH/PULL | HARDWARE * STOP HOLDER | HARDWARE * BOLT | HARDWARE * KICK PLATE | HARDWARE * THRES-HOLD | HARDWARE * WEATHER STRIP | LOUVER/GRILLE MIN. FREE AREA (SQ. FT) | FIRE PROTECTION RATING HOUR | DOOR GLASS TYPE | DOOR GLASS COLOR | REMARKS |
|---|---|---|---|---|---|---|---|---|---|---|---|---|---|---|---|---|---|---|---|---|---|---|---|---|---|---|---|---|---|---|---|
| D5 | CONTROL BLDG. – ELEC. ROOM | 3'-0" | 7'-0" | RH | ST | S | PAINT | OWNER | MTL. | F | PAINT | TBD | 2 | 2 | 5 | | H1 | L1 | C1 | X1 | – | – | – | K1 | T1 | W1 | – | – | – | – | |
| D6 | CONTROL BLDG. – ELEC. ROOM | 3'-0" | 7'-0" | RH | ST | S | PAINT | OWNER | MTL. | F | PAINT | TBD | 2 | 2 | 5 | | H1 | L1 | C1 | X1 | – | – | – | K1 | T1 | W1 | – | – | – | – | |
| D7 | CONTROL BLDG. – DEWATERING | 9'-0" | 9'-4" | OH | ST | OH-1 | PAINT | OWNER | MTL. | F-2 | PAINT | TBD | 2 | 2 | – | | – | – | – | – | – | – | – | – | – | – | – | – | IG | A | |

| REV. No. | DESCRIPTION | DATE | BY |
|---|---|---|---|
| 5 | ISSUED FOR FINAL REVIEW | 03/06/2015 | MA |
| 4 | ISSUED FOR 90% REVIEW | 11/26/2014 | MA |
| 3 | DEC SUBMISSION | 9/30/14 | MA |
| 2 | DESIGN REVIEW REVISIONS | 9/05/14 | MA |
| 1 | ISSUED FOR 30%REVIEW | 6/30/14 | MA |

# ARLINGTON WASTEWATER TREATMENT PLANT UPGRADE

TOWN OF POUGHKEEPSIE DUTCHESS COUNTY, NY

## SLUDGE DEWATERING DETAILS

IT IS A VIOLATION OF NEW YORK STATE EDUCATION LAW FOR ANY PERSON TO ALTER THESE PLANS, SPECIFICATIONS OR REPORTS IN ANY WAY, UNLESS ACTING UNDER THE DIRECTION OF A LICENSED PROFESSIONAL ENGINEER.

MORRIS ASSOCIATES,
ENGINEERING AND SURVEYING CONSULTANTS, PLLC
9 Elks Lane, Poughkeepsie, New York 12601
Phone No. (845) 454-3411
Fax No. (845) 473-1962
64 Green Street Hudson, New York 12534
Phone No. (518) 828-2300
Fax No. (518) 828-3963

| DATE | SCALE | | FILE No. | DRAWING No. |
|---|---|---|---|---|
| 01/15/14 | AS SHOWN | DESIGNED BY: MA - RJJ<br>DRAWN BY: MA<br>CHECKED BY: MA - RJJ / JFL | 60401.30 | G-46 |

General Decision Number: NY160007 04/01/2016 NY7

Superseded General Decision Number: NY20150007

State: New York

Construction Types: Building, Heavy and Highway

Counties: Dutchess, Orange, Sullivan and Ulster Counties in New York.

BUILDING CONSTRUCTION PROJECTS FOR ALL COUNTIES EXCEPT SULLIVAN (does not include single family homes and apartment up to and including 4 stories), HEAVY AND HIGHWAY CONSTRUCTION PROJECTS

Note: Under Executive Order (EO) 13658, an hourly minimum wage of $10.15 for calendar year 2016 applies to all contracts subject to the Davis-Bacon Act for which the solicitation was issued on or after January 1, 2015. If this contract is covered by the EO, the contractor must pay all workers in any classification listed on this wage determination at least $10.15 (or the applicable wage rate listed on this wage determination, if it is higher) for all hours spent performing on the contract in calendar year 2016. The EO minimum wage rate will be adjusted annually. Additional information on contractor requirements and worker protections under the EO is available at www.dol.gov/whd/govcontracts.

| Modification Number | Publication Date |
|---|---|
| 0 | 01/08/2016 |
| 1 | 01/15/2016 |
| 2 | 02/05/2016 |
| 3 | 04/01/2016 |

ASBE0040-003 05/01/2015

SULLIVAN AND ULSTER COUNTIES

| | Rates | Fringes |
|---|---|---|
| HAZARDOUS MATERIAL HANDLER<br>Duties limited to preparation wetting; stripping; removal; scrapping; vacuuming; bagging; and disposing of all insulation materials whether they contain asbestos or not from mechanical systems..... | $ 32.52 | 20.55 |
| Insulator/asbestos worker<br>(includes application of all insulating materials, protective coverings, coatings and finishes to all types of mechanical systems)..... | $ 32.52 | 20.55 |

```
---------------------------------------------------------------
 ASBE0091-002 05/27/2013

DUTCHESS AND ORANGE COUNTIES

                                  Rates          Fringes

HAZARDOUS MATERIAL HANDLER
     Duties limited to
     preparation, wetting,
     stripping, removal
     scrapping, vacuuming,
     bagging and disposing of
     all insulation materials;
     whether they contain
     asbestos or not from
     mechancial systems..........$ 24.55            9.95
Insulator/asbestos worker
     (Includes application of
     all insulating materials,
     protective coverings,
     coatings, and finishes to
     all types of mechanical
     systems)....................$ 35.40           32.19
---------------------------------------------------------------
 BOIL0005-001 01/01/2013

                                  Rates          Fringes

BOILERMAKER......................$ 49.47      33%+22.87+a

FOOTNOTE:

  a. PAID HOLIDAYS:  New Year's Day, Thanksgiving Day, Memorial
  Day, Independence Day, Labor Day and Good Friday, Friday
  after Thanksgiving, Christmas Eve Day and New Year's Eve

---------------------------------------------------------------
 BRNY0005-001 06/01/2015

                                  Rates          Fringes

BRICKLAYER (BUILDING
CONSTRUCTION)
     DUTCHESS, ORANGE
     (Excluding the town of
     Tuxedo) and ULSTER COUNTIES
      Bricklayers, Cement
      Masons, Plasterers, Stone
      Masons.....................$ 39.14           28.90
     ORANGE COUNTY (Town of
     Tuxedo)
      Bricklayers, Cement
      Masons, Plasterers, Stone
      Masons.....................$ 39.93           29.45
BRICKLAYER (HEAVY
CONSTRUCTION)
     DUTCHESS, ORANGE
     (Excluding the town of
     Tuxedo) and ULSTER COUNTIES
      Bricklayers, Cement
```

```
      Masons, Plasterers, Stone
      Masons.....................$ 39.64            28.90
     ORANGE COUNTY (Town of
     Tuxedo)
      Bricklayers, Cement
      Masons, Plasterers, Stone
      Masons.....................$ 40.43            29.45
BRICKLAYER (HIGHWAY
CONSTRUCTION)
     DUTCHESS, ORANGE
     (Excluding the town of
     Tuxedo), SULLIVAN and
     ULSTER COUNTIES
      Bricklayers, Cement
      Masons, Plasterers, Stone
      Masons.....................$ 39.64            28.90
-----------------------------------------------------------------
 CARP0279-005 07/01/2014

                                  Rates          Fringes

Carpenters:
     BUILDING CONSTRUCTION
      Carpenters, Millwrights,
      Pile Drivers...............$ 31.77            25.53
     HEAVY & HIGHWAY
     CONSTRUCTION
      Carpenters, Millwrights,
      Pile Drivers...............$ 31.77            25.53
-----------------------------------------------------------------
 CARP0740-002 07/01/2015

DUTCHESS AND ORANGE COUNTIES

                                  Rates          Fringes

MILLWRIGHT.......................$ 38.97            38.37
-----------------------------------------------------------------
 CARP1556-005 07/01/2015

DUTCHESS AND ORANGE COUNTIES

                                  Rates          Fringes

Diver Tender.....................$ 45.47            45.95
Diver............................$ 63.82            45.95
Dock Builder & Piledrivermen
     DOCKBUILDER................$ 50.50            45.95
-----------------------------------------------------------------
 ELEC0363-001 04/01/2015

                                  Rates          Fringes

ELECTRICIAN
     DUTCHESS (Remaining
     Townships), ULSTER AND
     SULLIVAN COUNTIES..........$ 38.00         6%+23.70
     ORANGE and DUTCHESS
     (Townships of Fishkill,
     East Fishkill and Beacon)
     COUNTIES...................$ 42.00         6%+23.70
```

FOOTNOTE:
a. Paid Holidays: New Year's Day, President's Day, Memorial Day, Fourth of July, Labor Day, Presidential Election Day, Veteran's Day, Thanksgiving Day, Day after Thanksgiving, Christmas Day

---

ELEC1249-002 05/04/2015

| | Rates | Fringes |
|---|---|---|
| ELECTRICIAN (LINE CONSTRUCTION-LIGHTING AND TRAFFIC SIGNAL INCLUDING ANY AND ALL FIBER OPTIC CABLE NECESSARY FOR THE TRAFFIC SIGNAL SYSTEMS, AND TRAFFIC MONITORING SYSTEMS, ROAD WEATHER INFORMATION SYSTEMS) | | |
| Flagman | $ 25.39 | 7%+20.50 |
| Groundman (Digging Machine Operator) | $ 38.09 | 7%+20.50 |
| Groundman (Truck Driver) | $ 33.86 | 7%+20.50 |
| Groundman Truck Driver (Tractor Trailer Unit) | $ 35.97 | 7%+20.50 |
| Lineman and Technician | $ 42.32 | 7%+20.50 |
| Mechanic | $ 33.86 | 7%+20.50 |

PAID HOLIDAYS:

a. Memorial Day, New Year's Day, President's Day, Good Friday, Decoration Day, Independence Day, Labor Day, Thanksgiving Day, Christmas Day, and Election Day for the President of the United States and Election Day for the Governor of New York State, provided the employee works two days before or two days after the holiday.

---

ELEC1249-004 05/04/2015

| | Rates | Fringes |
|---|---|---|
| ELECTRICIAN (Line Construction) | | |
| Overhead and underground distribution and maintenance work and all overhead and underground transmission line work including any and all fiber optic ground wire, fiber optic shield wire or any other like product by any other name manufactured for the dual purpose of ground fault protection and fiber optic capabilities : | | |
| Flagman | $ 28.14 | 7%+20.50 |
| Groundman digging machine | | |

```
      operator...................$ 42.21         7%+20.50
      Groundman truck driver
      (tractor trailer unit).....$ 39.87         7%+20.50
      Groundman Truck driver.....$ 37.52         7%+20.50
      Lineman and Technician.....$ 46.90         7%+20.50
      Mechanic...................$ 37.52         7%+20.50
     Substation:
      Cable Splicer..............$ 51.59         7%+20.50
      Flagman....................$ 28.14         7%+20.50
      Ground man truck driver....$ 37.52         7%+20.50
      Groundman digging machine
      operator...................$ 42.21         7%+20.50
      Groundman truck driver
      (tractor trailer unit).....$ 39.87         7%+20.50
      Lineman & Technician.......$ 46.90         7%+20.50
      Mechanic...................$ 37.52         7%+20.50
     Switching structures;
     railroad catenary
     installation and
     maintenance, third rail
     type underground fluid or
     gas filled transmission
     conduit and cable
     installations (including
     any and all fiber optic
     ground product by any
     other name manufactured
     for the dual purpose of
     ground fault protection
     and fiber optic
     capabilities), pipetype
     cable installation and
     maintenance jobs or
     projects, and maintenance
     bonding of rails; Pipetype
     cable installation
      Cable Splicer..............$ 53.02         7%+20.50
      Flagman....................$ 28.92         7%+20.50
      Groundman Digging Machine
      Operator...................$ 43.38         7%+20.50
      Groundman Truck Driver
      (tractor-trailer unit).....$ 40.97         7%+20.50
      Groundman Truck Driver.....$ 38.56         7%+20.50
      Lineman & Technician.......$ 48.20         7%+20.50
      Mechanic...................$ 38.56         7%+20.50

FOOTNOTE:

  a. PAID HOLIDAYS: New Year's Day, Presidents' Day, Memorial
  Day, Good Friday, Independence Day, Labor Day, Thanksgiving
  Day, Christmas Day, and Election Day for the President of
  the United States and Election Day for the Governor of New
  York State, provided the employee works two days before or
  two days after the holiday.

-----------------------------------------------------------------
 ELEC1249-005 05/04/2015

SULLIVAN COUNTY

                                      Rates          Fringes
```

```
ELECTRICIAN (LIGHTING AND
TRAFFIC SIGNAL LINEMAN
INCLUDING ANY AND ALL FIBER
OPTIC CABLE NECESSARY FOR THE
TRAFFIC SIGNAL SYSTEM,
TRAFFIC MONITORING SYSTEMS
AND ROAD WEATHER INFORMATION
SYSTEMS.)
     Flagman.....................$ 24.62         7%+20.50
     Groundman (Digging Machine
     Operator)...................$ 36.94         7%+20.50
     Groundman (Truck Driver)....$ 32.83         7%+20.50
     Groundman Truck Driver
     (tractor trailer unit)......$ 34.88         7%+20.50
     Lineman & Technician........$ 41.04         7%+20.50
     Mechanic....................$ 32.83         7%+20.50

FOOTNOTE:

  a.  New Year's Day, Memorial Day, Independence Day, Labor
  Day, Thanksgiving Day, Christmas Day, plus President's Day,
  Good Friday, Decoration Day, Election Day for the President
  of the United States and Election Day for the Governor of
  the State of New York, provided the employee works the day
  before or the day after the holiday.

-----------------------------------------------------------------
 ELEC1249-008 01/01/2014

                                  Rates          Fringes

ELECTRICIAN (Line
Construction)
     TELEPHONE, CATV
     FIBEROPTICS CABLE AND
     EQUIPMENT
      Cable splicer..............$ 29.12          3%+4.43
      Groundman..................$ 12.98          3%+4.43
      Installer Repairman-
      Teledata
      Lineman/Technician-
      Equipment Operator.........$ 27.64          3%+4.43
     Tree Trimmer................$ 22.41        8.30+3%+a

  a. New Year's Day, President's Day, Good Friday, Decoration
  Day, Independence Day, Labor Day, Veteran's Day,
  Thanksgiving Day, Day after Thanksgiving, Christmas Day.

-----------------------------------------------------------------
 ELEV0138-001 01/01/2016

                                  Rates          Fringes

ELEVATOR MECHANIC...............$ 53.72       29.985+a+b

FOOTNOTE:
  a.Vacation: 6%/under 5 years based on regular hourly rate for
  all hours worked.  8%/over 5 years based on regular hourly
  rate for all hours worked.
  b. PAID HOLIDAYS:  New Year's Day; Memorial Day; Independence
```

Day; Labor Day; Veterans' Day; Thanksgiving Day; the Friday after Thanksgiving Day; and Christmas Day.

---

ENGI0106-004 07/01/2015

NORTHERN PART OF DUTCHESS (To The Northern Boundary line of the City of Poughkeepsie)

| | Rates | Fringes |
|---|---|---|
| Power Equipment Operator | | |
| HEAVY & HIGHWAY | | |
| GROUP 1 | $ 38.91 | 24.40+a |
| GROUP 2 | $ 38.00 | 24.40+a |
| GROUP 3 | $ 35.43 | 24.40+a |
| GROUP 4 | $ 42.91 | 24.40+a |
| GROUP 5 | $ 41.91 | 24.40+a |
| GROUP 6 | $ 40.91 | 24.40+a |
| GROUP 7 | $ 40.52 | 24.40+a |

POWER EQUIPMENT OPERATORS HEAVY & HIGHWAY CLASSIFICATIONS

GROUP 1: Asphalt Curb Machine, Self Propelled, Slipform, Automated Concrete Spreader (CMI Type), Automatic Fine Grader, Backhoe (Except Tractor Mounted, Rubber Tired), Backhoe Excavator Full Swing (CAT 212 or similar type), Back Filling Machine, Belt Placer (CMI Type), Blacktop Plant (Automated), Boom truck , Cableway, Caisson Auger, Central Mix Concrete Plant (Automated), Concrete Curb Machine, Self Propelled, Slipform, Concrete Pump, Crane, Cherry Picker, Derricks (steel erection), Dragline, Overhead Crane (Gantry or Straddle type), Pile Driver, Truck Crane, Directional Drilling Machine, Dredge, Dual Drum Paver, Excavator (All Purpose Hydraulically Operated) (Gradall or Similar), Front End Loader ( 4 cu. yd. and Over), Head Tower (Sauerman or Equal), Hoist (Two or Three Drum), Holland Loader, Maintenance Engineer, Mine Hoist, Mucking Machine or Mole Pavement Breaker(SP) Wertgen; PB-4 and similar type, Power Grader, Profiler (over 105 H.P.) Quad 9, Quarry Master (or equivalent), Scraper, Fireman, Fork Lift, Form Tamper, Grout Pump, Gunite Machine, Hammers (Hydraulic self-propelled), Hydra-Spiker, ride-on, Hydraulic Pump (jacking system), Hydro-Blaster (Water), Mulching Machine, Oiler, Parapet Concrete or Pavement, Shovel, Side Boom, Slip Form Paver, Tractor Drawn, BeltType Loader, Truck or Trailer Mounted Log , Chipper (Self Feeder), Tug Operator (Manned Rented Equipment Excluded), Tunnel Shovel

GROUP 2: Asphalt Paver, Backhoe (Tractor Mounted, Rubber Tired), Bituminous Recycler Machine, Bituminous Spreader and Mixer, Blacktop Plant (NonAutomated), Blast or Rotary Drill (Truck or Tractor Mounted), Boring Machine, Cage Hoist, Central Mix Plant (NonAutomated) and All Concrete Batching Plants, Cherry Picker (5 tons capacity and under), Concrete Paver (Over 16S), Crawler Drill, Self-contained, Crusher, Diesel Power Unit, Drill Rigs, Tractor Mounted, Front End Loader (Under 4 cu. yd.), Greaseman/Lubrication Engineer, HiPressure Boiler (15 lbs. and over), Hoist (One

Drum), Hydro-Axe, Kolman Plant Loader and Similar Type Loaders, L.C.M. Work Boat Operator, Locomotive Mixer (for stabilized base selfpropelled), Monorail Machine, Plant Engineer, Profiler (105 H.P. and under), Grinder, Post Hole Digger and Post Driver, Power Broom (towed), Power Heaterman, Power Sweeper, Revinius Widener, Roller (Grade and Fill), Scarifier, ride-on, Shell Winder, Skid steer loader (Bobcat or similar), Span-Saw, ride-on, Steam Cleaner, Pug Mill, Pump Crete Ready Mix Concrete Plant Refrigeration Equipment (for soil stabilization)Road Widener, Roller (all above subgrade), Sea Mule, Self-contained Ride-on Rock Drill, Excluding Air-Track Type Drill, Skidder, Tractor with Dozer and/or Pusher, Trencher. Tugger Hoist, Vermeer saw (ride on, any size or type), Winch, Winch Cat

GROUP 3: A Frame Winch Hoist on Truck , Articulated Heavy Hauler, Aggregate Plant, Asphalt or Concrete Grooving, Machine (ride on), Ballast Regulator, Ride-on Boiler (used in conjunction with production), Bituminous Heater, self-propelled, Boat (powered), Cement and Bin Operator, Compressors, Dust Collectors, Generators, Pumps, Welding Machines, Light Plants, Heaters (hands-off equipment), Concrete Pavement Spreader and Finisher, Concrete Paver or Mixer (16S and under), Concrete Saw (self-propelled), Conveyor, Deck Hand, Directional Drill Machine Locator, Drill, (Core), Drill, (Well,) Farm Tractor with accessories, Fine Grade Machine, Tamper, ride-on, Tie Extractor, ride-on, Tie Handler, ride-on, Tie Inserter, ride-on, Tie Spacer, ride-on, Tire Repair, Track Liner, ride-on, Tractor, Tractor (with towed accessories), Vibratory Compactor, Vibro Tamp, Well Point

GROUP 4: Tower Cranes

GROUP 5: Cranes 50 tons and over

GROUP 6: Cranes 49 tons and below

GROUP 7: Master Mechanic

FOOTNOTES:

a. PAID HOLIDAYS: New Year's Day, Memorial Day, Independence Day, Labor Day, Thanksgiving Day, Christmas Day, provided the employee works the day before and the day after the holiday.

---

ENGI0106-008 07/01/2015

NORTHERN PART OF DUTCHESS (TO THE NORTHEN BOUNDARY LINE OF THE CITY OF POUGHKEEPSIE) BUILDING CONSTRUCTION

| | Rates | Fringes |
|---|---|---|
| Power equipment operators: | | |
| GROUP A(1) | $ 39.46 | 24.10+a |
| 1 | $ 40.46 | 24.10+a |
| 2 | $ 41.46 | 24.10+a |

```
     GROUP A.....................$ 39.01          24.10+a
     GROUP B.....................$ 38.07          24.10+a
     GROUP C.....................$ 35.42          24.10+a

  Hazardous work - Anytime Operating Engineers are involved
  with level C or above, $2.50 per hour over regular rate.

FOOTNOTE:
  a. Paid Holiday:  New Year's Day, Memorial Day, Independence
  Day, Labor Day, Thanksgiving Day, Christmas Day

POWER EQUIPMENT OPERATOR CLASSIFICATIONS

  GROUP A(1):  Crane, hydraulic cranes, tower crane, locomotive
  crane, piledriver, cableway, derricks, whirlies, dragline,
  boom truck (over 5 tons)


GROUP A(1):  Crane Premiums

1  over 150' :add $1.00
2  over 200': add $2.00

  GROUP  A:  Shovel, All excavator (except tractor mounted
  rubber tired John Deere 510 or smaller), gradalls, power
  road grader, all CMI equipment, front-end rubber tire
  loader, tractor-mounted drill (quarry master), mucking
  machine, concrete central mix plant, concrete pump,
  Belcrete system, automated asphalt concrete plant and
  tractor road paver, boom truck (5 tons and under).

  GROUP B:  Backhoe, (tractor mounted rubber tired equivalent
  to John Deere 510 or less), bulldozer, pushcat, tractor,
  traxcavator, scraper, LeTourneau grader, form fine grader,
  road roller, blacktop roller, blacktop spreader, power
  brooms, sweepers, trenching machine, Barber Green loader,
  side booms, hydrohammer, concrete spreader, concrete
  finishing machine, one drum hoist, power hosting (single
  drum), hoist - two drum or more, three drum engine, power
  hoisting (two drum and over), two drum and swinging engine,
  three drum swinging engine, hod hoist, A-L frame winches,
  cord and well drillers (one drum), post  hole digger, model
  CHB Vibro-Tamp or similar machine, batch bin and plant
  operator, dinkey locomotive, skid steer loader, track
  excavator 5/8 cu. yd. or smaller.

  GROUP C:  Fork lift, high lift, lull, Oiler, fireman and
  heavy- duty greaser, boilers, and steam generators, pump,
  vibrator, motor mixer, air compressor, dust collector,
  welding machine, well point, mechanical heater, generators,
  temporary light plants, concrete pumps, electric
  submersible pump 4" and over, murphy type diesel generator,
  conveyor, elevators, concrete mixer and belcrete power pack
  (belcrete system), seeding, and mulching machines, pumps.

-----------------------------------------------------------------
 ENGI0137-001 03/04/2013

DUTCHESS COUNTY (POUGHKEEPSIE AND SOUTH THEREOF)

BUILDING CONSTRUCTION
```

| | Rates | Fringes |
|---|---|---|
| Power Equipment Operator | | |
| GROUP 1A | $ 48.17 | 25.87+a |
| GROUP 1B | $ 44.35 | 25.87+a |
| GROUP 2A | $ 46.45 | 25.87+a |
| GROUP 3A | $ 44.73 | 25.87+a |
| GROUP 3B | $ 42.55 | 25.87+a |
| GROUP 4A | $ 44.27 | 25.87+a |
| GROUP 4B | $ 37.34 | 25.87+a |
| GROUP 5 | $ 40.31 | 25.87+a |
| GROUP 5A | $ 50.57 | 25.87+a |
| GROUP 5B | $ 38.21 | 25.87+a |
| GROUP 6 | $ 40.08 | 25.87+a |

NOTES: Hazmat: 20% above regular rate
Pumping operation Premium .50

Crane Operators (100-149 ft) 2.00

Crane Operators (149 ft +) 3.00

Loader Operators (over 5 cu y) .50
Shovel Operators (over 4 cu yd)1.00

FOOTNOTE:
a. New Years Day, Memorial Day, Independence Day, Labor Day Thanksgiving Day, Christmas Day, plus Lincoln's Birthday, Washington's Birthday, Good Friday, Columbus Day, November Election Day, Veteran's Day.

POWER EQUIPMENT OPERATORS CLASSIFICATION

GROUP 1-A: Carrier- trailer horse; concret-portable hoist; crane & hoist engineer-steel (concrete, material, super structure sub- structure); derrick (stone-steel); elevator & cage; hoist- single/double or triple drum; hoist-portable mobile unit; hoist engineer-concert (crane-derrick-mine hoist); hoist engineer- material; overhead crane; power house plant; telephies (cableway); whirly; maintenance engineer; Lull hilift or similar; hydraulic crane 25 ton and over; cherry picker 25 tons and over; backhoe Oliver 88; fordson; dynahoe; dual purpose and similar machines; Barber Green Loader-euclid loader or similar type; conway or similar mucking macking machines; dragline; gradall; shovel; backhoe etc. (crawler or truck); front end loaders; hydraulic boom; jersey spreader; lift slab console; letournequ or tounapull (scrapers over 20 yds struck); mucking machines; pavement breaker (air ram); paver (concrete); road boring machine; road mix machines; ross carrier and similar machines; post hole digger; shovel (tunnels); side boom; spreader (asphalt); scoopmobile-tractor-shovel over 1 1/2 yds. trenching machines vermeer concrete saw trencher and similar; tractor type demolition equipment; winch truck (a frame); hydraulic crane over 10 ton up to 25 ton); cherry picker over 10 ton up to 25 ton)

GROUP 1-B: Compressor (steel erection); pulse meter and push

button buzz box; elevator; mechanic (outside) all types; welder; scrapers 20 yds struck and under; machine pulling sheep's foot roller; vibratory rollers; roller 4 tons and over.

GROUP 2-A: Compactor self-propelled; grader; bulldoze D7 and similar tractors with a draw bar horsepower of 100 or over; bulldozer D6 and under; welder; scraper 20 yds struck and under; machine pulling sheep's foot roller; vibratory rollers.

GROUP 3-A: Asphalt plant; boiler (high pressure); concrete mixing plants; concrete pump; firemen; forklift; forklift (electric); joy drill or similar tractor drilling machine; loader - 1 1/2 yards and under; locomotive (all sizes); mixer concrete - 21E and over; portable asphalt plant; portable batch plant; portable crusher; quarry master; stone crusher; well drilling machine and well point system; cherry picker under 10 tons; hydraulic crane under 10 tons; concert buffy; one yard an up ride on dumper (benford or similar).

GROUP 3-B: Compressor over 125 cu. feet; conveyor belt machine regardless of size; lighting unit (portable & generator); welding machine (steel erection and excavation); and compressor plant; stud machine; ladder hoist.

GROUP 4-A: Air tractor drill; batch plant; bending machine; concrete breaker; concrete spreader; curb cutter machine; farm tractor (all types); finishing machine-concrete; hepavac clean air machine (all similar types: removal of asbestos etc.); material hopper-sand-stone-cement; mixer-concrete-under 21E; mulching grass spreader; pump-gypsum, etc., pump-plaster-grout -fireproofing; shop mechanic (not employed on job site); roller under 4 ton; spreading and fine grading machine; steel cutting machine; syphon pump-air-steam; tar joint machine; turbo jet burner or similar equipment; vibrator (1 to 5); fine grading machine; roof hoist (tugger hoist); television cameras-water- sewer-gas-etc.

GROUP 4-B: Compressor to 125 feet; dust; dust collector; heater all types; pump; pump station (water and sewer); steam jenny; sweeper; chipper; mulcher.

GROUP 5: Motorized roller (walk behind)

GROUP 5-A: Master Mechanic

GROUP 5-B: Utility Man

GROUP 6: Warehouse Man

---

ENGI0137-007 03/04/2013

Poughkeepsie and South thereof

| | Rates | Fringes |
|---|---|---|

Power Equipment Operator
(HEAVY & HIGHWAY)

| | | |
|---|---|---|
| GROUP 1 | $ 53.38 | 25.87+a |
| GROUP 1-A | $ 47.17 | 25.87+a |
| GROUP 1-B | $ 49.65 | 25.87+a |
| GROUP 2-A | $ 45.21 | 25.87+a |
| GROUP 2-B | $ 46.60 | 25.87+a |
| GROUP 3 | $ 44.44 | 25.87+a |
| GROUP 4-A | $ 40.48 | 25.87+a |
| GROUP 4-B | $ 34.89 | 25.87+a |
| GROUP 5 | $ 46.45 | 25.87+a |
| GROUP 5-A-1 | $ 49.89 | 25.87+a |
| GROUP 5-A-2 | $ 60.34 | 25.87+a |
| GROUP 5-A-3 | $ 58.30 | 25.87+a |
| GROUP 5-A-4 | $ 54.73 | 25.87+a |
| GROUP 5-A-5 | $ 46.24 | 25.87+a |

POWER EQUIPMENT OPERATORS CLASSIFICATIONS (HEAVY & HIGHWAY)

GROUP 1: Boom Truck; Cherry Picker; Clamshell; Crane, (Crawler, Truck); Dragline; Rough Terrain Crane

GROUP 1-A: Auger; Auto Grader; Dynahoe and Dual purpose and similar machines; Boat Captain; Boring Machine (all types); Bull Dozer-all sizes; Central Mix Plant Operator; Chipper-all types; Close circuit t.v.; Compactor with Blade; Concrete Portable Hoist; C.M.I. or similar; Conway or similar mucking machines; Gradall, Shovel Backhoe, etc. Grader; Derrick, (Stone- Steel; Elevator & cage, materials or passengers; Front end loaders over 1 1/2 yds.; Hoist Single, Double, Triple Drum, Hoist Portable Mobile Unit; Hoist Engineer-Concrete (Crane-Derrick-Mine Hoist); Hoist Engineer-Material, Hydraulic Boom; Letourneau or Tournapull (Scrapers over 20 yds. struck); Log Skidder; Movable Concrete Barrier Transfer & Transport Vehicle; mucking machines; overhead crane; paver (conccrete); pulsemeter; push button (buzz box) elevator; road mix machines; Robot Hammer (brock or similar), Ross carrier and similar machines; shovels (tunnels); side boom; Slip Form Machine; spreader (asphalt); scoopmobile-tractor-shovel over 1 1/2 yards; trenching machines; telephies- vermeer concrete saw trencher and/or similar; tractor-type demolition equipment, Whirly

GROUP 1-B: Road Paver, Asphalt

GROUP 2-A: Ballast Regulators; Compactor self-propelled; Cow Tracks; Fusion Machine; Rail Anchor Machines; Roller 4 ton and over; Scrapers - 20 yards struck; Switch Tampers; Vibratory roller, etc.

GROUP 2-B: Mechanic (outside) all types

GROUP 3-A: Air tractor drill; asphalt plant; batch plant; boiler (high pressure; concrete breaker; concrete pump concrete spreader; curb cutter machine; farm tractor (all types); finishing machine (concrete); fine grading machine; fireman; forklift; forklift (electric); joy drill or similar tractor drilling machine; loader - 1 1/2 yards and under; locomotive (all sizes), maintenance engineer; machine pulling sheeps foot roller; material hopper; mixer

concrete - 21-E and over; mulching grass spreader; portable asphalt plant, portable batch plant, portable crusher; powerhouse plant; quarry master; roller under 4 ton; spreading and fine grading machine; steel cutting machine; stone crusher; sweeper; turbojet burner or similar; well drilling machine ; winch truck "A" frame. John Henry Drill or similar.

GROUP 4-A: Service men (fuel or grease truck).

GROUP 4-B: Oiler; Compressor - compressor plant; paint compressor-steel erection; conveyor belt machine; lighting unit (portable & generator); oiler; pumps - pump station-water-sewer- gypsum- plaster, etc.; roller-motorized (walk-behind); welding machine (steel erection excavation); well point system; bending machine; dust collector; mixer - concrete under 21-E; heater all types; steam jenny; syphon pump-air-steam; tar joint machine; vibrator (1 to 5); Compressor Truck Mounted (2-6)

GROUP 5: Oiler
GROUP 5-A-1: Master Mechanic

GROUP 5-A-2: Engineer - all tower cranes, all climbing cranes and all cranes of 100 ton capacity or greater (3900 Manitowac or similar) irrespective of manufacturer and regardless of how the same is rigged (except for pile rigs).

GROUP 5-A-3: Engineer-- Pile Driver

GROUP 5-A-4: Hoist Engineer- Steel -Sub Structure

GROUP 5-A-5: Jersey-spreader, pavement breaker (air ram); Post Hole Digger

NOTES:

| | |
|---|---|
| Loader Operator (over 5 cu yds) | .50 |
| Shoval Operators (over 4 cu yd) | 1.00 |
| Hazmat premium over regular rate | 20% |

CRANES:

100 ft- 149 ft: receive $2.00 more than Group 1 rate
149 ft and over receive $300 more than Group 1 rate

FOOTNOTE:
a. PAID HOLIDAYS: New Year's Day; Lincoln's Birthday; Good Friday; Memorial Day; Independence Day; Labor Day; Veterans Day; Columbus Day; November Election Day; Thanksgiving Day; and Christmas Day

---

ENGI0825-007 01/01/2013

ORANGE, ULSTER AND SULLIVAN COUNTIES

| | Rates | Fringes |
|---|---|---|
| Power Equipment Operator | | |
| BUILDING, HEAVY & HIGHWAY | | |
| GROUP 1 | $ 41.02 | 27.75 |
| GROUP 2 | $ 39.43 | 27.75 |

```
      GROUP 3....................$ 37.52            27.75
      GROUP 4....................$ 35.89            27.75
      GROUP 5....................$ 34.18            27.75
      GROUP 6....................$ 42.84            27.75

NOTES:
Hazmat Premium             20%
Hydrographic Premium      .50
```

POWER EQUIPMENT OPERATORS CLASSIFICATIONS (BLDG, HEAVY & HWY)

GROUP 1: Autograde-Pavement-Profiler (CMI and Similar Type); utograde-Pavement-Profiler (CMI and Similar Types);Autograde Slipform Paver (CMI and Similar Types); Backhoe; Central Power Plants (all types); Concrete Paving Machine (s-240 and Similar Types); Cranes (All Types, Including Overhead and Straddle Traveling Type); Cranes, Gantry; Derricks (Land, Floating or Chicago Boom Type); Drillmaster/Quartmaster (Down the Hole Drill) Rotary Drill; Self-Propelled, Hydraulic Drill, Self-Powered Drill Draglines, Elevator Graders, Front End Loaders (5 yds. and over), Gradalls, Grader: Rago, Helicopters (Copilot), Helicopters, (Communication Engineer), Locomotive (large), Mucking Machines, Pavement and Concrete Breaker (Superhammer, Hoe Ram, Brokk 250 and Similar Types), Pile Driver (length of boom including length of leads shall determine premium rate applicable), Roadway Surface Grinder Scooper (loader and shovel), Shovels, Tree Chooper with Boom, Trench Machines, Tunnel Boring Machines.

GROUP 2: "A" Frame; Backhoe (Combination); Boom Attachment on Loaders (Rate based on size of bucket) not applicable to Pipehook) Boring and Drilling Machines, Brush Chopper, Shredder and Tree Shredder Tree Shearer, Cableways, Carry-alls, Concrete Pump, Concrete Pumping System, Pumpcrete and Similar Types, Conveyors, 125 ft and over; Drill Doctor (duties include dust collector, maintenance), Front End Loader (22 yds. but less than 2 yds.), Graders (Finish); Groove Cutting Machine (ride on type), Heater Planer; Hoists: (all type hoists, Shall Also Include Steam, Gas, Diesel, Electric, Air Hydraulic, Single and Double Drum, Concrete, Brick Shaft, Caisson, Snorkel Roof, and or any other similar type Hoisting Machines, Portable or Stationary, Except Chicago Boom Type). Long Boom Rate to Be Applied if Hoist is "outside material lower hoist"; Hydraulic Cranes-10tons and Under; Hydro-Axe; Hydro-Blaster; Jacket (Screw Air Hydraulic Power Operated Unit or Console Type: Not Hand Jack or Pile Load Test Type), Log Skidder; Pans, Pavers (all) Concrete; Plate and Frame Filter Press; Pumpcrete Machines; Squeeze Crete and Concrete Pumping (regardless of size); Scrapers; Sidebooms; Straddle Carrier, Ross and Similar Types; Vacuum Truck; Whip Hammer; Winch Trucks (Hoisting).

GROUP 3: Asphalt Curbing Machine, Asphalt Plant Engineer, Asphalt Spreader; Autograde Tube Finisher & Texturing Machine (CMI and Similar types) Autograde Curecrete Machine (CMI and Similar Types); Bar Bending Machines (power), Batchers, Batching Plant and Crusher on-site; Belt Conveyor Systems; Boom Type Skimmer Machines; Bridge Deck Finisher;

Bulldozers (all); Car Dumpers (A:road); Chief of Party; Compressor and Blower Type Units (used) Independenty or Mounted On Dual Purpose Trucks, On Job Site or In Conduction with Job Site, In Loading and Unloading of Concrete, Cement, Fly Ash, Instantcrete, or Similar Type Materials); Compressor 92 or 3 in Battery); Concrete Finishing Machines; Concrete Saws and Cutters (ride on type); Concrete Spreaders, Hetzel, Rexomatic and Similar types; Concrete Vibrators; Conveyors, Under 125 ft), Crushing Machines, Ditching Machine, Small (ditchwitch, Vermeer or Similar type); Dope Dots (mechanical with or without pump), dumpsters; Elevator; Fireman; Forklifts (economobile, lull, and similar types of equipment); Front End Loaders (1 yd. and over but less than 2 yds.); Generators (2 or 3 in Battery/ within 100 ft); Giraffe Grinders, Graders and Motor Patrols; Grout Pump; Gunnite Machines (excluding nozzle); Hammer Vibratory (in conduction with generators); Hoists (Roof, Tuggeraerial Platfrom Hoist and House Cars), Hoppers, Hoppers Doors (power operated); Hydro-Blaster (where required); Ladders (Motorized); Laddervator; Locomotive, Dinky type; Maintenance, Utility Man; Mechanics; Mixers (Excepting Paving Mixers); Motor Patrols and Graders; Pavement Breakers, Small, Self-Propelled ride on type (also maintains compressor or hydraulic unit); Pavement Breaker, Truck Mounted; Pipe Bending Machine (power); Pitch Pump; Plaster Pump (regardless of size); Post Hole Digger (post pounder and auger); Rod Bending Machines (power); Roller, Black Top; Scales, (power); Seaman Pulverizing Mixer; Shoulder Widener; Silos; Skimmer Machines (Boom Type); Steel Cutting Machine, Services and Maintains; Tamrock Drill; Tractors; Tug Captain; Vibrating Plants (used in conduction with unloading); welder and Repair Machines. Concrete cleaning/decontamination machine operator; Directional boring machine; Heavy equipment robotics operator; Master environmental maintenance operator; Ultra high pressure waterjet cutting tool system operator; maintenance operator; Vacuum blasting machine operator

GROUP 4: Brooms and Sweepers; Chippers; Compressors (single); Concrete Spreaders (small type); Conveyor Loaders (not including Elevator Graders); Engines, Large Diesel (1620 h.p.) and Staging Pump; Farm Tractors; Fertilizing Equipment (Operator and Maintenance of); Fine Grade Machine (small type); Form Line Graders (small type); Front End Loader (under 1 yd); Generator (single); Grease, Gas, Fuel and Oil Supply Trucks; Heaters (Nelson or Other Type Including Propane, Natural Gas or Flowtype Units); Lights, Portable Generating Light Plants; Mixers, Concrete Small; Mulching Equipment (Operation and Maintenance of); Pumps (2 of Less Than 4 Inch Suction); Pumps 94 Inch Suction and Over Including Submersible Pumps); Pumps (Diesel Engine and Hydraulic); Immaterial of Power; Road Finishing Machines (Small Type); Rollers, Grade, Full Or Stone Base; Seeding Equipment (Operation and maintence of); Sprinkler and Water Pump Trucks (Used on job Site or in conduction with Job Site); Steam Jennies and Boilers, Irrespective of Use; Stone Spreader; Tamping Machines, Vibrating Ride On; Temporary Heating Plant (nelson or Other Type, Including Propane, Natural Gas or Flow Type Units); Water and Sprinkler Trucks (Used On Job Site In Conduction with Job

Site); Welding Machines-Within 100 ft (Gas, and /or Electric Converters of any type, single, tow or three in a battery). welding system, multiple (rectifier transformer type) well point systems (including installation by bull gang and maintenance of); Off Road back dumps.

GROUP 5: Oiler

GROUP 6: Helicopter Pilot

a. PAID HOLIDAYS: New Years Day, Washington's Birthday Memorial Day, July 4th, Labor Day, Veteran's Day, Election Day, Thanksgiving Day, and Christmas Day, provided the employee works one day during the calendar week in which the holiday occurs.

---

ENGI0825-008 01/01/2013

ORANGE, ULSTER AND SULLIVAN COUNTIES

| | Rates | Fringes |
|---|---|---|
| Power equipment operators: | | |
| BUILDING CONSTRUCTION | | |
| STEEL ERECTION | | |
| GROUP 1 | $ 45.04 | 27.75 |
| GROUP 2 | $ 43.38 | 27.75 |
| GROUP 3 | $ 40.59 | 27.75 |
| GROUP 4 | $ 37.93 | 27.75 |
| GROUP 5 | $ 36.40 | 27.75 |
| GROUP 6 | $ 42.21 | 27.75 |
| GROUP 7 | $ 44.65 | 27.75 |
| BUILDING CONSTRUCTION TANK ERECTION | | |
| GROUP 1 | $ 45.81 | 27.75 |
| GROUP 2 | $ 43.97 | 27.75 |
| GROUP 3 | $ 46.45 | 27.75 |
| GROUP 4 | $ 40.58 | 27.75 |
| GROUP 5 | $ 35.37 | 27.75 |
| OILOSTATIC MAINLINES AND TRANSPORTATION PIPE LINES | | |
| GROIUP 6 | $ 45.88 | 27.75 |
| GROUP 1 | $ 43.95 | 27.75 |
| GROUP 2 | $ 42.30 | 27.75 |
| GROUP 3 | $ 42.30 | 27.75 |
| GROUP 4 | $ 38.66 | 27.75 |
| GROUP 5 | $ 44.73 | 27.75 |
| GROUP 6 | $ 44.58 | 22.50+a |

NOTES:

| | |
|---|---|
| Hydrographic Premium | 50 |
| Hazmat Premium | 20% |
| Tunnel Premium | .75 |

STEEL ERECTION CLASSIFICATIONS

GROUP 1: Cranes (All Cranes, Land or Floating with Booms Including Jib 140 ft and over, Above Ground); Derricks, Land, Floating or Chicago Boom Type with Booms including

Jib 140 ft and over above ground).

GROUP 2: Cranes (All Cranes, Land or Floating with Booms Including Jib Less Than 140 ft Above Ground); Derricks, Land, Floating or Chicago Boom Type with Booms Including Jib Less Than 140 ft above Ground).

GROUP 3: "A" Frame, Cherry Pickers 10 tons and under, Hoists Shall Also Include Steam, Gas, Desel, Electric, Air Hydraulic, Single and Double Drum Concrete, Brick Shaft Caisson, or Any Other Similar Type Hoisting Machines, Portable or Stationary, Except Chicago Boom Type; Jacks: Screw Air Hydraulic Power Operated unit or Console Type (not hand Jack or Pile Load Test Type); Side Booms.

GROUP 4: Aerial Platform used as Hoist; Compressor: 2 or 3 in Battery; Elevators or House Cars; Conveyors and Tugger Hosits; Chief of Party; Firemanp; Forklift; Generators (2 or 3); Maintenance (Utility Man); Rod Bending Machine (power); Welding Machines (Gas or Electric, 2 or 3 in Battery, Including Diesels); Captain: Power Boats: Tug Master: Power Boats.

GROUP 5: Compressor, Single; Welding Machine, Single, Gas, Diesel, and Electric Converters of any Type: Welding System Multple (Rectifier Transformer Type); Generator, Single.

GROUP 6: Oiler

GROUP 7: Helicopter Pilot .

FOOTNOTE: a. PAID HOLIDAYS: New Years Day, Washington's Birthday, Memorial Day, Independence Day, Labor Day, Veteran's Day, Election Day, Thanksgiving Day, and Christmas Day, provided the employee works one day in the calendar week during which the holiday occurs.

For BUILDING CONSTRUCTION TANK ERECTION CLASSIFICATIONS

| | |
|---|---|
| NOTES: Tunnel Premium | .75 |
| Hazmat Premium | 20% |
| Hydrographic Premium | .50 |

TANK ERECTION CLASSIFICATIONS

GROUP 1: Operating Engineers on all Cranes, Derricks, ets with Booms Including Jib 140 ft or More Above Ground.

GROUP 2: Operating Engineer on all Equipment, Including Cranes, Derricks, ets with Booms Including Jib, Less Than 140 ft above the ground.

GROUP 3: Helicopter Pilot Engineer.

GROUP 4: Air Compressors, Welding Machines and Generators are Covered and are Defined as Cover: Gas, Diesel, or Electric Driven Equipment and Sources of Power from a Permanent Plant: ie: Staem, Comgressed Air, Hydraulic or Other Power,

For The Operating of any Machine or Automatic Tools, Used In The Erection, Alteration, Repair and Dismantling of Tanks and Any and All "Dual Purpose" Trucks Used On The Construction Job Site, or in the Loading and Unloading of Materials, at the Construction Job Sited or in Conjuction with the Job Site.

GROUP 5: Oiler

FOOTNOTE:

a. PAID HOLIDAYS: New Years Day, Washington's Birthday, Memorial Day, Independence Day, Labor Day, Veteran's Day, Election Day, Thanksgiving Day, and Christmas Day provided the Employee works one day in the calendar week during which the holiday occurs

For OILOSTATIC MAINLINES AND TRANSPORTATION PIPE LINE CLASSIFICATIONS

N0TES:

| | |
|---|---|
| Hydrographic Premium | .50 |
| Hazmat Premium | 20% |
| Tunnel Premium | .75 |

OILSTATIC MAINLINES AND TRANSPORTATION PIPE LINES CLASSIFICATIONS

GROUP 1: Backhoe; Cranes (all types); Draglines, Front End Loaders (5yds. and over), Gradalls, Helicopters (co-pilot), Helicopters (Communication Engineer); Scooper (Loader and Shovel) Koehring; Trench Machines.

GROUP 2: "A" Frame; Backhoe (Combination Hoe Loader); Boring and Drilling Machines; Ditching Machines, Small, Ditchwitch, Vermeer or Similar type; Forklifts; Front End Loaders 92 yds. and over but less than 5 yds.); Graders, Finish (fine); Hydraulic Cranes 10 tons and under (over 10 tons) Cranes Rate Applies); Side Booms: Winch Trucks (Hoisting).

GROUP 3: Backfiller; Brooms and Sweepers; Bulldozers; Compressor (2 or 3 in battery); Chief of Party; Front End Loaders (under 2 yds); Generators; Giraffe Grinders; Graders and Motor Patrols; Machnic; Pipe Bending Machine (power);Tractors; Water and Sprinkler Trucks used on Job Site or in Conduction with Job Site); Welder and Repair Mechanic; Captain (power boats); Tug Master (power boats).

GROUP 4: Compressor (single); Dope Pots (Mechanical with or without Pump); Dust Collectors; Pumps (4 inch suction and over); Pumps (2 of less than 4 inche suction); Pumps, Diesel Engine and Hydraulic (immaterial of power); Welding Machines, Gas or Electric Converters of any type- 2 or 3 in Battery Multple Welders; Well Point Systems (including installation and Maintenance); Fram Tractors.

GROUP 5: Oiler, grease, gas, fuel and oil supply trucks; Tire repair and maintenance

GROUP 6: Helicopter Pilot

FOOTNOTE:

a. Paid Holidays: New Years Day, Washington's Birthday, Memorial Day, Independence Day, Labor Day, Veteran's Day, Election Day, Thanksgiving Day and Christmas Day provided the Employee works one day in calendar week during which the holidays occurs.

---

IRON0417-001 07/01/2015

| | Rates | Fringes |
|---|---|---|
| IRONWORKER | $ 38.92 | 38.75+a |

a) Paid Holidays: New Year's Day, Memorial Day, Fourth of July, Labor Day, Thanksgiving Day, Day after Thanksgiving (unpaid), Christmas Day.

---

* LABO0017-002 07/01/2014

| | Rates | Fringes |
|---|---|---|
| LABORER | | |
| DUTCHESS COUNTY (Asbestos, lead, toxic and hazardous waste abatement and any other environmental related work): (BUILDING CONSTRUCTION) | | |
| GROUP 1 | $ 30.05 | 22.40 |
| GROUP 2 | $ 34.55 | 22.40 |
| DUTCHESS COUNTY (Asbestos, lead, toxic and hazardous waste abatement and any other environmental related work): (HEAVY & HIGHWAY:) | | |
| GROUP 2 | $ 37.90 | 22.40 |
| GROUP 3 | $ 38.55 | 22.40 |
| ORANGE AND ULSTER COUNTIES (BUILDING CONSTRUCTION:) | | |
| GROUP 1 | $ 29.65 | 22.40 |
| GROUP 2 | $ 34.00 | 22.40 |
| GROUP 3 | $ 37.90 | 22.40 |
| ORANGE, ULSTER, AND SULLIVAN COUNTIES (HEAVY & HIGHWAY) | | |
| GROUP 1 | $ 29.65 | 22.40 |
| GROUP 2 | $ 34.00 | 22.40 |
| GROUP 3 | $ 38.55 | 22.40 |
| GROUP 4 | $ 42.45 | 22.40 |
| TUNNEL, SHAFT & CAISSON WORK | | |
| GROUP 1 | $ 42.65 | 22.40 |

LABORERS BUILDING CLASSIFICATIONS

GROUP 1: Custodial work, flag person, portable generator tender,portable pump tender, pitman and dumpman, firewatch, temporary heat tender, temporary light tender, traffic control, tool room tender; Artificial turf, air chipping hammer acoustic pump and mixer, carpenter tender, concrete, concrete curb and sidewalk form setter, concrete form stripping, concrete sealing, concrete curing, concrete finisher, concrete vibrator, compressor, clean up after trades, dismantling demolition, excavation, fireproofing, foundation and building piping, pump and mixer, gunite, general clean up, grade checker, grading and backfilling, hoists, hod carrier, landscaping, mason tender, multi building trades tender, jackhammer, pavement breaker, poured gypsum roof work, power tampers, power walk behind roller, pressure blasting, power mixer, scaffolding, snow removal, signal person, sandblasting, styrofoam and similar installation, radio control equipment including but not limited to radio control tampers and rollers, radio control excavator, all erecting and dismantling of scaffold for masonry regardless of height, walking and riding power buggies, temporary weather protection, wrecking, waterproofing, stone and tile tendersr, radio controlled hammers and breakers, unloading of trucks, air track, assembling and placing gabion baskets, asphalt, blaster, bob cat type machine for demo and clean up, chain link fence, chain saw, chipping hammer, concrete conveyor belt, saw, core drill, corrugated pipe, construction specialist, cleaning machine, concrete form setter, conduit layer, cutting torch, discharge pipe, drill chuck tender, duct bank layer, explosive handler, hydraulic splitter, granite or stone curbing, handler, joy and jib drill, IngersollRand heavy duty crawler master type HCMZ drill machines or equivalent, laser level, nonmetallic pipe layer, metallic pipe layer, LeRoi hydraulic drill or similar, mega mixer, power fork lift, prestressed and precast concrete, power brush cutter, pump crete machine, retaining walls, rip rap, retention and toxic and hazardous waste liners, setting of block, setting of block, setting of brick, setting of stone, sound barriers, transit under laborers jurisdiction, tow behind concrete or grout pump, traffic and pedestrian stripping, surface planner, manufactured curb, walk behind durface planner, wagon drill, welding; * asbestos abatement work, lead abatement work, toxic and hazardous waste related work; when protective equipment and clothing are not required.

GROUP 2: Forklift for masonry purposes

GROUP 3: Asbestos Abatement work, toxic and hazardous abatement, lead abatement work, environmental work.

BUILDING CLASSIFICATIONS

GROUP 1: Asbestos abatement work, lead abatement work, toxic and hazardous waste related work; when protective equipment and clothing are not required.

GROUP 2: Asbestos abatement work, toxic and hazardous abatement, lead abatement work, environmental work.

FOOTNOTE:

a. PAID HOLIDAYS: New Years Day, President's Day, Memorial Day, Independence Day, Labor Day, Election Day, Veterans Day, Thanksgiving Day, Christmas Day

LABORERS HEAVY AND HIGHWAY CLASSIFICATIONS

GROUP 1: Flagperson, gateperson

GROUP 2: General laborers, chuck tender, handling and distributing drinking water, distributing all tools and supplies of laborers, nipper, powder carrier, magazine tender, warehouse laborers, concrete man, vibrator man, mason tender, mortar man, spraying, brushing and covering of concrete for curing and preservative purposes, traffic striper, scaffold builder, concrete crub and sidewalk from setter; permanent traffic striping and reflective devices, placing and maintenance of all flares, cones, lights, signs, barricades, traffic patterns, and all temporary reflective type materials for traffic control, custodial work, traffic directors, temporary heat or light tenders, tool room, dewatering pump men, pitman, dumpmen, snow removal and firewatch, asphalt man, joint setter, signal person, pipelayer, pipelining and relining, wellpoints, conduit and duct layer, wire puller rip rap and dry stone layer, steel rod carrier, core drill, rock splitter, Hilti gun air or electric, jackhammer, bush hammer, pavement breaker, chipping hammer, wagon drill, air track, jib rig, joy drill, gunite and sand blasting, coal passer and other machine operators, power tool operator, sprayer and nozzle man on mulching and seeding machine, all guard rail and fence, all seeding and sod laying, all landscape work, grade checker, all bridge work, walk behind self-propelled power saw, grinder, groover or similar type machine, walk behind tamper and roller of all types, salvage, stripping, wrecking and dismantling laborer (including barman, cutting torch and burner man), sheeting and shoring coming under laborers
jurisdicition, bit grinder, operator of form pin puller and drivers, sandblasting, joint and jet sealer, filling and wiring baskets for gabion walls, permanent sign man, median barrier,
sta-wall or similar type product, chain saw operator, railroad track laborer, waterproofer, pre-stressed and pre-cast concrete brick, block and stone pavers, power tools used to perform work usually done by laborers, power buggy and pumpcrete operator, fireproof, plaster and acoustic pump, asbestos, toxic, bio-remediation, phyto-remediation, lead or hazardous materials abatement when protective clothing and equipment is not required, power brush cutter, retention liners, artificial turf, retaining walls, walk behind surface planer, welding related to laborers work, remote controlled equipment normally operated by laborers, all technician work including but not limited to stitching, seaming, heat welding, fireproof sprayer, mortar mixer, concrete finisher, form setter for concrete curbs and flatwork. Gunite nozzle man, stone cutters, granite stone layer, manhole, catch basin or inlet installing, lase men. Ground man on milling machine.

GROUP 3: Ingersoll Rand eavy duty crawler master type HCMZ any drill using 4" or larger bit, asbestos, toxic, bio-remediation, phyto-remediation, lead or hazardous material abatement when protective clothing and equipment is required, all working foremen including grade, pipe, concrete, clearing, blacktop, drill, paving and blaster etc., Hydraulic drill or similar, forklift for masonry only, Blaster and asphalt screedman.

GROUP 4: Asbestos, toxic, lead or hazardous material abatement foreman.

HEAVY & HIGHWAY CLASSIFICATIONS

GROUP 1: Asbestos, toxic, bio-remediation, phyto-remediation, lead or hazardous material abatement; when protective equipment and clothing are not required.

GROUP 2: Asbestos toxic, bio-remediation, phyto-remediation, lead or hazardous material abatement when protective clothing and equipment is required.

FOOTNOTE:

PAID HOLIDAYS: New Years Day, Presidents's Day, Memorial Day, Independence Day, Labor Day, Election Day, Veterans Day, Thanksgiving Day, Christmas Day

TUNNEL, SHAFT & CASSION CLASSIFICATIONS

GROUP 1: Laborer, Pit and Dumpman, Chuck Tender, Brakeman and Powder; Miner and all mavhine men, Safety Miner, all shaft work, casson work, drilling, blow pipe, all air tools, tugger scaling, nipper gunniting srom pot to nozzle, bit grinder, singal man (top and bottom), shift steward, concrete man, shield driven tunnel, mixed face and soft ground liner plate tunnel in free air.

---

LABO1000-001 06/01/2012

DUTCHESS COUNTY

| | Rates | Fringes |
|---|---|---|
| Laborers: | | |
| BUILDING CONSTRUCTION | | |
| GROUP 1 | $ 28.60 | 22.20 |
| GROUP 2 | $ 29.72 | 22.20 |
| GROUP 3 | $ 30.95 | 22.20 |

LABORERS CLASSIFICATIONS (BUILDING)

GROUP 1: Mason tenders, carpenter tenders, laborer stripping and cleaning forms, laborer grading and digging ditches, sweepers, cleaners.

GROUP 2: Hod carriers, plasterers' tenders, scaffold builders (padlock and self-supporting scaffold 14 ft. or under all runways, mortar mixers) machine and hand, concrete mixers by machine under 21e, vibrators, form

setters, asphalt rakers, handling reinforcement rods, drillers, jackhammer, operator, signalman, gunniting, motorbugs, water pump 2" or under barco machine, wreckers, paving breakers, power saw operators, other machine operators.

GROUP 3: Blasters, Laser beam operator.

---

LABO1000-004 05/01/2012

DUTCHESS COUNTY

| | Rates | Fringes |
|---|---|---|
| Laborers: | | |
| HEAVY & HIGHWAY | | |
| GROUP 1 | $ 25.60 | 22.25+a |
| GROUP 2 | $ 29.36 | 22.25+a |
| GROUP 3 | $ 30.36 | 22.25+a |

LABORERS CLASSIFICATIONS (HEAVY & HIGHWAY)

GROUP 1: Flagperson, placing and maintenance of all flares, cones, light, signs, barricades, traffic control, custodial work, traffic directors, temporary heat or light tenders, tool rooms.

GROUP 2: General Laborers, Dumpman, Pitman, Concrete Man, Signal Man, Pipelayer, Rip Rap, Dry Stone Layer, Jackhammer, Powderman, Highscalers, Power Buggy Operator, Steel Rod Carrier, Vibratory Operator, Other Machine Operator, Wrecking, Vibrator Operator-Compactor, Gunite and Sand Blasting, Water Pump 2" or under, Nipper, Chucker, Asphalt Workers.

GROUP 3: Asphalt Raker, Asphlat Screeman, Drillers (all), Laser Beam Operator, Form Setter/Aligners, Blasters.

FOOTNOTE:
a. PAID HOLIDAYS: New Year's Day, Lincoln's Birthday, Good Friday, Washington's Birthday, November Election Day, Memorial Day, Independence Day, Labor Day, Columbus Day, Thanksgiving Day and Christmas Day and Veteran's Day.

---

PAIN0009-004 11/01/2015

DUTCHESS, ORANGE, SULLIVAN and ULSTER COUNTIES

| | Rates | Fringes |
|---|---|---|
| GLAZIER | $ 43.95 | 36.82 |

---

PAIN0155-003 05/01/2014

| | Rates | Fringes |
|---|---|---|
| Painters: | | |
| Drywall Finishers | $ 29.44 | 19.71 |
| Lead Abatement Work | $ 29.44 | 19.71 |

```
     Painter/Paperhanger.........$ 29.44           19.71
     Spray Rate.................$ 30.44           19.71
-----------------------------------------------------------------
 PAIN0806-008 10/01/2015

DUTCHESS, ORANGE, SULLIVAN AND ULSTER COUNTIES

                                  Rates          Fringes

PAINTER
     Structural steel and Bridge.$ 49.00           37.13
-----------------------------------------------------------------
* PLUM0021-005 05/01/2015

ZONE 2

DUTCHESS COUNTY AND THE REMAINDER  OF ULSTER COUNTY

                                  Rates          Fringes

PLUMBER/PIPEFITTER..............$ 47.84           30.07
-----------------------------------------------------------------
 PLUM0373-002 05/01/2015

ORANGE COUNTY  Towns of Lakeville, Four Corners, Sterling
Forest, Tuxedo Park, Southfields, Arden, Newburgh Junction,
Greenwood Lake, Monroe, Harriman, Woodbury Falls, Woodbury,
Woodbury Station, Central Valley, and the Palisades Interstate
Park and Bear Mountain Park


                                  Rates          Fringes

Plumber; Steamfitter............$ 43.07           32.97
REFRIGERATION MECHANIC..........$ 23.04           11.88
-----------------------------------------------------------------
 PLUM0373-003 05/01/2015

SULLIVAN COUNTY (Townships of Lumberland, Forestburgh,
Highland, Tusten, Mamakating, Fallsburgh, Thompson, Bethel,
Cochecton, Delaware, Freemont, Callicoon, Liberty, Monticello,
Neversink and Rockland); ORANGE COUNTY (Remaining Townships)
and ULSTER COUNTY (Towns of Shawangurk, Wawarsing, Plattekill,
Marlboro and Ellenville up to Napanoch Prison)


                                  Rates          Fringes

Plumber; Steamfitter............$ 43.07           32.97
-----------------------------------------------------------------
 ROOF0008-002 07/01/2014

                                  Rates          Fringes

ROOFER..........................$ 40.70           25.14
-----------------------------------------------------------------
* SFNY0669-002 01/01/2016

                                  Rates          Fringes

SPRINKLER FITTER................$ 41.47           21.70
```

---

SHEE0038-001 07/01/2014

| | Rates | Fringes |
|---|---|---|
| Sheet metal worker | $ 43.41 | 31.71 |

---

TEAM0445-001 05/01/2015

| | Rates | Fringes |
|---|---|---|
| Truck drivers: | | |
| GROUP 1 | $ 30.15 | 31.43+a |
| GROUP 1A | $ 31.29 | 31.43+a |
| GROUP 2 | $ 29.59 | 31.43+a |
| GROUP 3 | $ 29.59 | 31.43+a |
| GROUP 4 | $ 29.26 | 31.43+a |
| GROUP 5 | $ 29.14 | 31.43+a |

FOOTNOTE:

a. PAID HOLIDAYS: New Year's Day, Labor Day, President's Day, Presidential Election Day, Veterans Day, Decoration Day, Independence Day, Thanksgiving Day and Christmas Day provided the employee works two days in any calendar week during which the holidays occurs.

TRUCK DRIVER CLASSIFICATIONS

GROUP 1: Drivers on Letourneau tractors, double barrel euclids, Athey wagons and similar equipment (except when hooked to scrapers), I-beam and pole trailers, drivers of road oil distributors, tire trucks and tractors and trailers with 5 axles and over, Articulated Back Dumps and Articulated Water Trucks.

GROUP 1A: Drivers on detachable Gooseneck Low bed Trailers rated over 35 tons.

GROUP 2: Drivers on all equipment 25 yards and over, up to and including 30 yard bodies and cable dump trailers and powder and dynamite trucks.

GROUP 3: Drivers on all equipment up to and including 24 yard bodies, mixer trucks, dump crete trucks and similar types of equipment, fuel trucks, batch trucks and all other tractor trailers.

GROUP 4: Drivers on tri axles, ten-wheelers, grease trucks and tillermen.

GROUP 5: Drivers on pick-up trucks used for materials & parts, drivers on escort man over-the-road and drivers on straight trucks.

---

WELDERS - Receive rate prescribed for craft performing operation to which welding is incidental.

==========

Unlisted classifications needed for work not included within the scope of the classifications listed may be added after award only as provided in the labor standards contract clauses (29CFR 5.5 (a) (1) (ii)).

---

The body of each wage determination lists the classification and wage rates that have been found to be prevailing for the cited type(s) of construction in the area covered by the wage determination. The classifications are listed in alphabetical order of "identifiers" that indicate whether the particular rate is a union rate (current union negotiated rate for local), a survey rate (weighted average rate) or a union average rate (weighted union average rate).

Union Rate Identifiers

A four letter classification abbreviation identifier enclosed in dotted lines beginning with characters other than "SU" or "UAVG" denotes that the union classification and rate were prevailing for that classification in the survey. Example: PLUM0198-005 07/01/2014. PLUM is an abbreviation identifier of the union which prevailed in the survey for this classification, which in this example would be Plumbers. 0198 indicates the local union number or district council number where applicable, i.e., Plumbers Local 0198. The next number, 005 in the example, is an internal number used in processing the wage determination. 07/01/2014 is the effective date of the most current negotiated rate, which in this example is July 1, 2014.

Union prevailing wage rates are updated to reflect all rate changes in the collective bargaining agreement (CBA) governing this classification and rate.

Survey Rate Identifiers

Classifications listed under the "SU" identifier indicate that no one rate prevailed for this classification in the survey and the published rate is derived by computing a weighted average rate based on all the rates reported in the survey for that classification. As this weighted average rate includes all rates reported in the survey, it may include both union and non-union rates. Example: SULA2012-007 5/13/2014. SU indicates the rates are survey rates based on a weighted average calculation of rates and are not majority rates. LA indicates the State of Louisiana. 2012 is the year of survey on which these classifications and rates are based. The next number, 007 in the example, is an internal number used in producing the wage determination. 5/13/2014 indicates the survey completion date for the classifications and rates under that identifier.

Survey wage rates are not updated and remain in effect until a new survey is conducted.

Union Average Rate Identifiers

Classification(s) listed under the UAVG identifier indicate that no single majority rate prevailed for those classifications; however, 100% of the data reported for the classifications was union data. EXAMPLE: UAVG-OH-0010 08/29/2014. UAVG indicates that the rate is a weighted union average rate. OH indicates the state. The next number, 0010 in the example, is an internal number used in producing the wage determination. 08/29/2014 indicates the survey completion date for the classifications and rates under that identifier.

A UAVG rate will be updated once a year, usually in January of each year, to reflect a weighted average of the current negotiated/CBA rate of the union locals from which the rate is based.

---

WAGE DETERMINATION APPEALS PROCESS

1.) Has there been an initial decision in the matter? This can be:

* an existing published wage determination
* a survey underlying a wage determination
* a Wage and Hour Division letter setting forth a position on a wage determination matter
* a conformance (additional classification and rate) ruling

On survey related matters, initial contact, including requests for summaries of surveys, should be with the Wage and Hour Regional Office for the area in which the survey was conducted because those Regional Offices have responsibility for the Davis-Bacon survey program. If the response from this initial contact is not satisfactory, then the process described in 2.) and 3.) should be followed.

With regard to any other matter not yet ripe for the formal process described here, initial contact should be with the Branch of Construction Wage Determinations. Write to:

Branch of Construction Wage Determinations
Wage and Hour Division
U.S. Department of Labor
200 Constitution Avenue, N.W.
Washington, DC 20210

2.) If the answer to the question in 1.) is yes, then an interested party (those affected by the action) can request review and reconsideration from the Wage and Hour Administrator (See 29 CFR Part 1.8 and 29 CFR Part 7). Write to:

Wage and Hour Administrator
U.S. Department of Labor
200 Constitution Avenue, N.W.
Washington, DC 20210

The request should be accompanied by a full statement of the interested party's position and by any information (wage

payment data, project description, area practice material, etc.) that the requestor considers relevant to the issue.

3.) If the decision of the Administrator is not favorable, an interested party may appeal directly to the Administrative Review Board (formerly the Wage Appeals Board). Write to:

Administrative Review Board
U.S. Department of Labor
200 Constitution Avenue, N.W.
Washington, DC 20210

4.) All decisions by the Administrative Review Board are final.

==========

END OF GENERAL DECISION

# SECTION 06100 - ROUGH CARPENTRY

## PART 1 - GENERAL

### 1.1 RELATED DOCUMENTS

A. Drawings and general provisions of the Contract, including General and Supplementary Conditions and Division 1 Specification Sections, apply to this Section.

### 1.2 SUMMARY

A. This Section includes the following:

1. Framing with dimension lumber.
2. Framing with timber.
3. Framing with engineered wood products.
4. Rooftop equipment bases and support curbs.
5. Wood blocking and nailers.
6. Wood furring.

B. Related Sections include the following:

1. Division 6 Section "Metal-Plate-Connected Wood Trusses."

### 1.3 DEFINITIONS

A. Exposed Framing: Framing not concealed by other construction.

B. Dimension Lumber: Lumber of 2 inches nominal or greater but less than 5 inches nominal in least dimension.

C. Timber: Lumber of 5 inches nominal or greater in least dimension.

D. Lumber grading agencies, and the abbreviations used to reference them, include the following:

1. NeLMA: Northeastern Lumber Manufacturers' Association.
2. NLGA: National Lumber Grades Authority.
3. RIS: Redwood Inspection Service.
4. SPIB: The Southern Pine Inspection Bureau.
5. WCLIB: West Coast Lumber Inspection Bureau.
6. WWPA: Western Wood Products Association.

### 1.4 SUBMITTALS

A. Product Data: For each type of process and factory-fabricated product. Indicate component materials and dimensions and include construction and application details.

1. Include data for wood-preservative treatment from chemical treatment manufacturer and certification by treating plant that treated materials comply with requirements. Indicate type of preservative used and net amount of preservative retained.
2. For products receiving a waterborne treatment, include statement that moisture content of treated materials was reduced to levels specified before shipment to Project site.
3. Include copies of warranties from chemical treatment manufacturers for each type of treatment.

## 1.5 QUALITY ASSURANCE

A. Source Limitations for Engineered Wood Products: Obtain each type of engineered wood product through one source from a single manufacturer.

## 1.6 DELIVERY, STORAGE, AND HANDLING

A. Stack lumber flat with spacers between each bundle to provide air circulation. Provide for air circulation around stacks and under coverings.

# PART 2 - PRODUCTS

## 2.1 WOOD PRODUCTS, GENERAL

A. Lumber: DOC PS 20 and applicable rules of grading agencies indicated. If no grading agency is indicated, provide lumber that complies with the applicable rules of any rules-writing agency certified by the ALSC Board of Review. Provide lumber graded by an agency certified by the ALSC Board of Review to inspect and grade lumber under the rules indicated.

1. Factory mark each piece of lumber with grade stamp of grading agency.

## 2.2 WOOD-PRESERVATIVE-TREATED LUMBER

A. Preservative Treatment by Pressure Process: AWPA C2.

B. Mark lumber with treatment quality mark of an inspection agency approved by the ALSC Board of Review.

C. Application: Treat items indicated on Drawings, and the following**:**

1. Wood cants, nailers, curbs, equipment support bases, blocking, stripping, and similar members in connection with roofing, flashing, vapor barriers, and waterproofing.
2. Wood sills, sleepers, blocking, and similar concealed members in contact with masonry or concrete.
3. Wood framing and furring attached directly to the interior of below-grade exterior masonry or concrete walls.
4. Wood framing members that are less than 18 inches above the ground in crawlspaces or unexcavated areas.
5. Wood floor plates that are installed over concrete slabs-on-grade.

## 2.3 DIMENSION LUMBER FRAMING

A. Maximum Moisture Content: 19 percent.

B. Non-Load-Bearing]Interior Partitions: No. 2 grade of any species.

C. Exterior and Load-Bearing Walls: No. 2 grade and any of the following species:

1. Hem-fir (north); NLGA.
2. Southern pine; SPIB.
3. Douglas fir-larch; WCLIB or WWPA.

D. Joists, Rafters, and Other Framing Not Listed Above: Select Structural any of the following species:

1. Southern pine; SPIB.
2. Douglas fir-larch; WCLIB or WWPA.
3. Spruce-pine-fir; NLGA.

## 2.4 MISCELLANEOUS LUMBER

A. General: Provide miscellaneous lumber indicated and lumber for support or attachment of other construction, including the following:

1. Blocking.
2. Nailers.
3. Furring.

B. For items of dimension lumber size, provide Construction or No. 2 grade lumber with 19 percent maximum moisture content of any species.

C. For concealed boards, provide lumber with 19 percent maximum moisture content and **any** of the following species and grades:

1. Mixed southern pine, No. 2 grade; SPIB.
2. Hem-fir or hem-fir (north), 2 Common grade; NLGA, WCLIB, or WWPA.

D. For blocking and nailers used for attachment of other construction, select and cut lumber to eliminate knots and other defects that will interfere with attachment of other work.

E. For furring strips for installing plywood or hardboard paneling, select boards with no knots capable of producing bent-over nails and damage to paneling.

## 2.5 FASTENERS

A. General: Provide fasteners of size and type indicated that comply with requirements specified in this Article for material and manufacture.

1. Provide fasteners with hot-dip zinc coating complying with ASTM A 153/A 153M.
2. Nails, Brads, and Staples: ASTM F 1667.

## 2.6 METAL FRAMING ANCHORS

A. Basis-of-Design Products: Subject to compliance with requirements, provide products indicated on Drawings or comparable products by one of the following:

1. Alpine Engineered Products, Inc.
2. Cleveland Steel Specialty Co.
3. Harlen Metal Products, Inc.
4. KC Metals Products, Inc.
5. Simpson Strong-Tie Co., Inc.
6. Southeastern Metals Manufacturing Co., Inc.
7. USP Structural Connectors.

B. Rafter Tie-Downs: Bent strap tie for fastening rafters or roof trusses to wall studs below, 1-1/2 inches wide by 0.050 inch thick.

## 2.7 MISCELLANEOUS MATERIALS

A. Sill-Sealer Gaskets: Glass-fiber-resilient insulation, fabricated in strip form, for use as a sill sealer; 1-inch nominal thickness, compressible to 1/32 inch; selected from manufacturer's standard widths to suit width of sill members indicated.

B. Adhesives for Gluing Furring and Sleepers to Concrete or Masonry: Formulation complying with ASTM D 3498 that is approved for use indicated by adhesive manufacturer.

C. Water-Repellent Preservative: NWWDA-tested and -accepted formulation containing 3-iodo-2-propynyl butyl carbamate, combined with an insecticide containing chloropyrifos as its active ingredient.

# PART 3 - EXECUTION

## 3.1 INSTALLATION, GENERAL

A. Set rough carpentry to required levels and lines, with members plumb, true to line, cut, and fitted. Fit rough carpentry to other construction; scribe and cope as needed for accurate fit. Locate furring, nailers, blocking, and similar supports to comply with requirements for attaching other construction.

B. Framing Standard: Comply with AF&PA's "Details for Conventional Wood Frame Construction," unless otherwise indicated.

C. Do not splice structural members between supports, unless otherwise indicated.

D. Provide blocking and framing as indicated and as required to support facing materials, fixtures, specialty items, and trim.

1. Provide metal clips for fastening gypsum board or lath at corners and intersections where framing or blocking does not provide a surface for fastening edges of panels. Space clips not more than 16 inches o.c.

E. Sort and select lumber so that natural characteristics will not interfere with installation or with fastening other materials to lumber. Do not use materials with defects that interfere with function of member or pieces that are too small to use with minimum number of joints or optimum joint arrangement.

F. Comply with AWPA M4 for applying field treatment to cut surfaces of preservative-treated lumber.

1. Use inorganic boron for items that are continuously protected from liquid water.
2. Use copper naphthenate for items not continuously protected from liquid water.

G. Securely attach rough carpentry work to substrate by anchoring and fastening as indicated, complying with the following:

H. Use common wire nails, unless otherwise indicated. Select fasteners of size that will not fully penetrate members where opposite side will be exposed to view or will receive finish materials. Make tight connections between members. Install fasteners without splitting wood; do not countersink nail heads, unless otherwise indicated.

## 3.2 WOOD BLOCKING, AND NAILER INSTALLATION

A. Install where indicated and where required for screeding or attaching other work. Form to shapes indicated and cut as required for true line and level of attached work. Coordinate locations with other work involved.

B. Attach items to substrates to support applied loading. Recess bolts and nuts flush with surfaces, unless otherwise indicated.

C. Where wood-preservative-treated lumber is installed adjacent to metal decking, install continuous flexible flashing separator between wood and metal decking.

END OF SECTION 06100

# SECTION 07210 - BUILDING INSULATION

## PART 1 - GENERAL

### 1.1 RELATED DOCUMENTS

A. Drawings and general provisions of the Contract, including General and Supplementary Conditions and Division 1 Specification Sections, apply to this Section.

### 1.2 SUMMARY

A. This Section includes the following:
   1. Cavity wall insulation.
   2. Concealed building insulation.
   3. Vapor retarders.

### 1.3 SUBMITTALS

A. Product Data: For each type of product indicated.

B. Samples for Verification: Full-size units for each type of exposed insulation indicated.

C. Product Test Reports: Based on evaluation of comprehensive tests performed by a qualified testing agency, for insulation products.

### 1.4 QUALITY ASSURANCE

A. Source Limitations: Obtain each type of building insulation through one source.

B. Fire-Test-Response Characteristics: Provide insulation and related materials with the fire-test-response characteristics indicated, as determined by testing identical products per test method indicated below by UL or another testing and inspecting agency acceptable to authorities having jurisdiction. Identify materials with appropriate markings of applicable testing and inspecting agency.

   1. Surface-Burning Characteristics: ASTM E 84.
   2. Fire-Resistance Ratings: ASTM E 119.
   3. Combustion Characteristics: ASTM E 136.

### 1.5 DELIVERY, STORAGE, AND HANDLING

A. Protect insulation materials from physical damage and from deterioration by moisture, soiling, and other sources. Store inside and in a dry location. Comply with manufacturer's written instructions for handling, storing, and protecting during installation.

B. Protect plastic insulation as follows:

1. Do not expose to sunlight, except to extent necessary for period of installation and concealment.
2. Protect against ignition at all times. Do not deliver plastic insulating materials to Project site before installation time.
3. Complete installation and concealment of plastic materials as rapidly as possible in each area of construction.

## PART 2 - PRODUCTS

### 2.1 MANUFACTURERS

A. Available Manufacturers: Subject to compliance with requirements, manufacturers offering products that may be incorporated into the Work include, but are not limited to, the following:

1. Glass-Fiber Insulation:

a. CertainTeed Corporation.
b. Johns Manville Corporation.
c. Knauf Fiber Glass.
d. Owens Corning.

### 2.2 INSULATING MATERIALS

A. General: Provide insulating materials that comply with requirements and with referenced standards.

1. Preformed Units: Sizes to fit applications indicated; selected from manufacturer's standard thicknesses, widths, and lengths.

B. Unfaced Mineral-Fiber Blanket Insulation: ASTM C 665, Type I (blankets without membrane facing); consisting of fibers manufactured from glass; with maximum flame-spread and smoke-developed indices of 25 and 50, respectively; passing ASTM E 136 for combustion characteristics.

C. Faced Mineral-Fiber Blanket Insulation: ASTM C 665, Type III, Class A; Category 1 (membrane is a vapor barrier), faced with kraft, on one face; consisting of fibers manufactured from glass.

## PART 3 - EXECUTION

### 3.1 EXAMINATION

A. Examine substrates and conditions, with Installer present, for compliance with requirements for Sections in which substrates and related work are specified and other conditions affecting performance.

B. Proceed with installation only after unsatisfactory conditions have been corrected.

## 3.2 PREPARATION

A. Clean substrates of substances harmful to insulations or vapor retarders, including removing projections capable of puncturing vapor retarders or of interfering with insulation attachment.

B. Close off openings in cavities receiving poured-in-place insulation to prevent escape of insulation. Provide bronze or stainless-steel screens (inside) where openings must be maintained for drainage or ventilation.

## 3.3 INSTALLATION, GENERAL

A. Comply with insulation manufacturer's written instructions applicable to products and application indicated.

B. Install insulation that is undamaged, dry, and unsoiled and that has not been left exposed at any time to ice and snow.

C. Extend insulation in thickness indicated to envelop entire area to be insulated. Cut and fit tightly around obstructions and fill voids with insulation. Remove projections that interfere with placement.

D. Water-Piping Coordination: If water piping is located on inside of insulated exterior walls, coordinate location of piping to ensure that it is placed on warm side of insulation and insulation encapsulates piping.

E. Apply single layer of insulation to produce thickness indicated, unless multiple layers are otherwise shown or required to make up total thickness.

## 3.4 INSTALLATION OF GENERAL BUILDING INSULATION

A. Apply insulation units to substrates by method indicated, complying with manufacturer's written instructions. If no specific method is indicated, bond units to substrate with adhesive or use mechanical anchorage to provide permanent placement and support of units.

B. Seal joints between closed-cell (nonbreathing) insulation units by applying adhesive, mastic, or sealant to edges of each unit to form a tight seal as units are shoved into place. Fill voids in completed installation with adhesive, mastic, or sealant as recommended by insulation manufacturer.

C. Set vapor-retarder-faced units with vapor retarder to warm side of construction, unless otherwise indicated. Do not obstruct ventilation spaces, except for firestopping.

   1. Tape joints and ruptures in vapor retarder, and seal each continuous area of insulation to surrounding construction to ensure airtight installation.

D. Install mineral-fiber blankets in cavities formed by framing members according to the following requirements:

1. Use blanket widths and lengths that fill the cavities formed by framing members. If more than one length is required to fill cavity, provide lengths that will produce a snug fit between ends.
2. Place blankets in cavities formed by framing members to produce a friction fit between edges of insulation and adjoining framing members.
3. For metal-framed wall cavities where cavity heights exceed 96 inches, support unfaced blankets mechanically and support faced blankets by taping stapling flanges to flanges of metal studs.

E. Stuff glass-fiber, loose-fill insulation into miscellaneous voids and cavity spaces where shown. Compact to approximately 40 percent of normal maximum volume equaling a density of approximately 2.5 lb/cu. ft.

## 3.5 PROTECTION

A. Protect installed insulation and vapor retarders from damage due to harmful weather exposures, physical abuse, and other causes. Provide temporary coverings or enclosures where insulation is subject to abuse and cannot be concealed and protected by permanent construction immediately after installation.

END OF SECTION 07210

SECTION 07460 - SOFFIT

PART 1 - GENERAL

1.1 RELATED DOCUMENTS

A. Drawings and general provisions of the Contract, including General and Supplementary Conditions and Division 1 Specification Sections, apply to this Section.

1.2 SUMMARY

A. This Section includes the following:

1. Vinyl soffit.

B. Related Sections include the following:

1. Division 6 Section "Rough Carpentry"

1.3 SUBMITTALS

A. Product Data: For each type of product indicated.

1. For vinyl soffit.

B. Samples for Initial Selection: For soffit.

1.4 QUALITY ASSURANCE

A. Source Limitations for Soffit: Obtain each type, color, texture, and pattern of soffit, including related accessories, through one source from a single manufacturer.

1.5 DELIVERY, STORAGE, AND HANDLING

A. Store materials in a dry, well-ventilated, weathertight place.

1.6 SEQUENCING

A. Coordinate installation with flashings and other adjoining construction to ensure proper sequencing.

## 1.7 WARRANTY

A. Special Warranty: Manufacturer's standard form in which manufacturer agrees to repair or replace siding that does not comply with requirements or that fails within specified warranty period. Failures include, but are not limited to, cracking, deforming or otherwise deteriorating beyond normal weathering.

1. Warranty Period: 25 years from date of Substantial Completion.

## 1.8 EXTRA MATERIALS

A. Furnish any and all extra materials to complete the work.

# PART 2 - PRODUCTS

## 2.1 MANUFACTURERS

A. In other Part 2 articles where titles below introduce lists, the following requirements apply to product selection:

1. Available Manufacturers: Subject to compliance with requirements, products that may be incorporated into the Work include, but are not limited to, manufacturers specified.

## 2.2 SOFFIT

A. Vinyl Soffit: Integrally colored, vinyl soffit complying with ASTM D 4477.

1. Available Manufacturers:

a. Alcoa Building Products, Inc.
b. Alside, Inc.
c. CertainTeed Corp.
d. Crane Plastics Holding Company.
e. Gentek Building Products, Inc.
f. Heartland Building Products.
g. Louisiana-Pacific Corporation.
h. Mitten Vinyl Inc.
i. Owens Corning.
j. Resource Materials Corporation; Subsidiary of Poly-Foam International, Inc.
k. Rollex Corporation.
l. Royal Group Technologies Limited.
m. Variform, Inc.

2. Pattern: 12-inch exposure in V-grooved, triple 4-inch board style.
3. Ventilation: Provide perforated soffit.
4. Colors for Vinyl Soffit: As selected by Owner from manufacturer's full range.

## 2.3 ACCESSORIES

A. Vinyl Accessories: Where vinyl accessories are indicated, provide integrally colored vinyl accessories complying with ASTM D 3679 except for wind-load resistance.

1. Texture: Smooth.

B. Decorative Accessories: Provide the following types of decorative accessories as indicated:

1. Moldings and trim.

C. Colors for Decorative Accessories: As selected by Owner from manufacturer's full range.

D. Fasteners:
1. For fastening vinyl, use aluminum fasteners. Where fasteners will be exposed to view, use prefinished aluminum fasteners in color to match item being fastened.

# PART 3 - EXECUTION

## 3.1 EXAMINATION

A. Examine substrates for compliance with requirements for installation tolerances and other conditions affecting performance of siding. Proceed with installation only after unsatisfactory conditions have been corrected.

## 3.2 PREPARATION

A. Clean substrates of projections and substances detrimental to application.

## 3.3 INSTALLATION

A. General: Comply with siding manufacturer's written installation instructions applicable to products and applications indicated unless more stringent requirements apply. Center nails in elongated nailing slots without binding siding to allow for thermal movement. Overlap joints to shed water away from direction of prevailing wind.

B. Install vinyl soffit and accessories according to ASTM D 4756.

## 3.4 ADJUSTING AND CLEANING

A. Remove damaged, improperly installed, or otherwise defective siding materials and replace with new materials complying with specified requirements.

B. Clean finished surfaces according to siding manufacturer's written instructions and maintain in a clean condition during construction.

END OF SECTION 07460

# SECTION 09260 - GYPSUM BOARD ASSEMBLIES

## PART 1 - GENERAL

### 1.1 RELATED DOCUMENTS

A. Drawings and general provisions of the Contract, including General and Supplementary Conditions and Division 1 Specification Sections, apply to this Section.

### 1.2 SUMMARY

A. This Section includes the following:

1. Interior gypsum wallboard.

### 1.3 DEFINITIONS

A. Gypsum Board Terminology: Refer to ASTM C 11 for definitions of terms for gypsum board assemblies not defined in this Section or in other referenced standards.

### 1.4 SUBMITTALS

A. Product Data: For each type of product indicated.

B. Shop Drawings: Show locations, fabrication, and installation of control and expansion joints including plans, elevations, sections, details of components, and attachments to other units of Work.

### 1.5 QUALITY ASSURANCE

A. Fire-Test-Response Characteristics: For gypsum board assemblies with fire-resistance ratings, provide materials and construction identical to those tested in assembly indicated according to ASTM E 119 by an independent testing and inspecting agency acceptable to authorities having jurisdiction.

1. Fire-Resistance-Rated Assemblies: Indicated by design designations from FM's "Approval Guide, Building Products." UL's "Fire Resistance Directory." GA-600, "Fire Resistance Design Manual."

B. Sound Transmission Characteristics: For gypsum board assemblies with STC ratings, provide materials and construction identical to those tested in assembly indicated according to ASTM E 90 and classified according to ASTM E 413 by a qualified independent testing agency.

1. STC-Rated Assemblies: Indicated by design designations from GA-600, "Fire Resistance Design Manual."

## 1.6 DELIVERY, STORAGE, AND HANDLING

A. Deliver materials in original packages, containers, or bundles bearing brand name and identification of manufacturer or supplier.

B. Store materials inside under cover and keep them dry and protected against damage from weather, direct sunlight, surface contamination, corrosion, construction traffic, and other causes. Stack gypsum panels flat to prevent sagging.

## 1.7 PROJECT CONDITIONS

A. Environmental Limitations: Comply with ASTM C 840 requirements or gypsum board manufacturer's written recommendations, whichever are more stringent.

# PART 2 - PRODUCTS

## 2.1 MANUFACTURERS

A. Available Manufacturers: Subject to compliance with requirements, manufacturers offering products that may be incorporated into the Work include, but are not limited to, the following:

1. Gypsum Board and Related Products:

   a. American Gypsum Co.
   b. G-P Gypsum Corp.
   c. National Gypsum Company.
   d. United States Gypsum Co.

## 2.2 INTERIOR GYPSUM WALLBOARD

A. Panel Size: Provide in maximum lengths and widths available that will minimize joints in each area and correspond with support system indicated.

B. Gypsum Wallboard: ASTM C 36.

1. Type X:

   a. Thickness: As indicated 5/8 inch.
   b. Long Edges: Tapered and featured (rounded or beveled) for prefilling.
   c. Location: Where required for fire-resistance-rated assembly.

## 2.3 JOINT TREATMENT MATERIALS

A. General: Comply with ASTM C 475.

B. Joint Tape:

1. Interior Gypsum Wallboard: Paper.
2. Exterior Gypsum Soffit Board: Paper.
3. Glass-Mat Gypsum Sheathing Board: 10-by-10 glass mesh.
4. Tile Backing Panels: As recommended by panel manufacturer.

C. Joint Compound for Interior Gypsum Wallboard: For each coat use formulation that is compatible with other compounds applied on previous or for successive coats.

1. Prefilling: At open joints and damaged surface areas, use setting-type taping compound.
2. Embedding and First Coat: For embedding tape and first coat on joints, fasteners, and trim flanges, use setting-type taping compound.

   a. Use setting-type compound for installing paper-faced metal trim accessories.

3. Fill Coat: For second coat, use setting-type, sandable topping compound.
4. Finish Coat: For third coat, use setting-type, sandable topping compound.

## 2.4 AUXILIARY MATERIALS

A. General: Provide auxiliary materials that comply with referenced installation standards and manufacturer's written recommendations.

B. Laminating Adhesive: Adhesive or joint compound recommended for directly adhering gypsum panels to continuous substrate.

C. Steel Drill Screws: ASTM C 1002, unless otherwise indicated.

1. Use screws complying with ASTM C 954 for fastening panels to steel members from 0.033 to 0.112 inch thick.
2. For fastening cementitious backer units, use screws of type and size recommended by panel manufacturer.

# PART 3 - EXECUTION

## 3.1 EXAMINATION

A. Examine areas and substrates, with Installer present, and including welded hollow-metal frames, cast-in anchors, and structural framing, for compliance with requirements and other conditions affecting performance. Proceed with installation only after unsatisfactory conditions have been corrected.

## 3.2 INSTALLING STEEL FRAMING, GENERAL

A. Installation Standards: ASTM C 754, and ASTM C 840 requirements that apply to framing installation.

B. Install supplementary framing, blocking, and bracing at terminations in gypsum board assemblies to support fixtures, equipment services, heavy trim, grab bars, toilet accessories,

furnishings, or similar construction. Comply with details indicated and with gypsum board manufacturer's written recommendations or, if none available, with United States Gypsum's "Gypsum Construction Handbook."

## 3.3 APPLYING AND FINISHING PANELS, GENERAL

A. Gypsum Board Application and Finishing Standards: ASTM C 840 and GA-216.

B. Install sound attenuation blankets before installing gypsum panels, unless blankets are readily installed after panels have been installed on one side.

C. Install gypsum panels with face side out. Butt panels together for a light contact at edges and ends with not more than 1/16 inch of open space between panels. Do not force into place.

D. Locate edge and end joints over supports, except in ceiling applications where intermediate supports or gypsum board back-blocking is provided behind end joints. Do not place tapered edges against cut edges or ends. Stagger vertical joints on opposite sides of partitions. Do not make joints other than control joints at corners of framed openings.

E. Attach gypsum panels to steel studs so leading edge or end of each panel is attached to open (unsupported) edges of stud flanges first.

F. Attach gypsum panels to framing provided at openings and cutouts.

G. Do not attach gypsum panels across the flat grain of wide-dimension lumber, including floor joists and headers. Float gypsum panels over these members using resilient channels, or provide control joints to counteract wood shrinkage.

H. Form control and expansion joints with space between edges of adjoining gypsum panels.

I. Cover both faces of steel stud partition framing with gypsum panels in concealed spaces (above ceilings, etc.), except in chases braced internally.

   1. Unless concealed application is indicated or required for sound, fire, air, or smoke ratings, coverage may be accomplished with scraps of not less than 8 sq. ft. in area.
   2. Fit gypsum panels around ducts, pipes, and conduits.
   3. Where partitions intersect open concrete coffers, concrete joists, and other structural members projecting below underside of floor/roof slabs and decks, cut gypsum panels to fit profile formed by coffers, joists, and other structural members; allow 1/4- to 3/8-inch wide joints to install sealant.

J. Isolate perimeter of non-load-bearing gypsum board partitions at structural abutments, except floors. Provide 1/4- to 1/2-inch wide spaces at these locations, and trim edges with U-bead edge trim where edges of gypsum panels are exposed. Seal joints between edges and abutting structural surfaces with acoustical sealant.

K. Floating Construction: Where feasible, including where recommended in writing by manufacturer, install gypsum panels over wood framing, with floating internal corner construction.

L. STC-Rated Assemblies: Seal construction at perimeters, behind control and expansion joints, and at openings and penetrations with a continuous bead of acoustical sealant. Install acoustical sealant at both faces of partitions at perimeters and through penetrations. Comply with ASTM C 919 and manufacturer's written recommendations for locating edge trim and closing off sound-flanking paths around or through gypsum board assemblies, including sealing partitions above acoustical ceilings.

M. Space fasteners in gypsum panels according to referenced gypsum board application and finishing standard and manufacturer's written recommendations.

1. Space screws a maximum of 12 inches o.c. for vertical applications.

N. Space fasteners in panels that are tile substrates a maximum of 8 inches o.c.

## 3.4 PANEL APPLICATION METHODS

A. Single-Layer Application:

1. On ceilings, apply gypsum panels before wall/partition board application to the greatest extent possible and at right angles to framing, unless otherwise indicated.
2. On partitions/walls, apply gypsum panels vertically (parallel to framing), unless otherwise indicated or required by fire-resistance-rated assembly, and minimize end joints.

a. Stagger abutting end joints not less than one framing member in alternate courses of board.

B. Single-Layer Fastening Methods: Apply gypsum panels to supports with steel drill screws.

## 3.5 FINISHING GYPSUM BOARD ASSEMBLIES

A. General: Treat gypsum board joints, interior angles, edge trim, control joints, penetrations, fastener heads, surface defects, and elsewhere as required to prepare gypsum board surfaces for decoration. Promptly remove residual joint compound from adjacent surfaces.

B. Prefill open joints, rounded or beveled edges, and damaged surface areas.

C. Apply joint tape over gypsum board joints, except those with trim having flanges not intended for tape.

D. Gypsum Board Finish Levels: Finish panels to levels indicated below, according to ASTM C 840, for locations indicated:

1. Level 4: Embed tape and apply separate first, fill, and finish coats of joint compound to tape, fasteners, and trim flanges at panel surfaces that will be exposed to view, unless otherwise indicated.

## 3.6 FIELD QUALITY CONTROL

A. Above-Ceiling Observation: Before Contractor installs gypsum board ceilings, Engineer will conduct an above-ceiling observation and report deficiencies in the Work observed. Do not proceed with installation of gypsum board to ceiling support framing until deficiencies have been corrected.

1. Notify Engineer seven days in advance of date and time when Project, or part of Project, will be ready for above-ceiling observation.
2. Before notifying Engineer, complete the following in areas to receive gypsum board ceilings:

    a. Installation of 80 percent of lighting fixtures, powered for operation.
    b. Installation, insulation, and leak and pressure testing of water piping systems.
    c. Installation of air-duct systems.
    d. Installation of air devices.
    e. Installation of mechanical system control-air tubing.
    f. Installation of ceiling support framing.

END OF SECTION 09260

SECTION 09912 - PAINTING

PART 1 - GENERAL

1.1 RELATED DOCUMENTS

A. Drawings and general provisions of the Contract, including General and Supplementary Conditions and Division 1 Specification Sections, apply to this Section.

1.2 SUMMARY

A. This Section includes surface preparation and field painting of exposed exterior and interior items and surfaces.

1. Surface preparation, priming, and finish coats specified in this Section are in addition to shop priming and surface treatment specified in other Sections.

B. Paint exposed surfaces, except where these Specifications indicate that the surface or material is not to be painted or is to remain natural. If an item or a surface is not specifically mentioned, paint the item or surface the same as similar adjacent materials or surfaces. If a color of finish is not indicated, Engineer will select from standard colors and finishes available.

1. Painting includes field painting of exposed bare and covered pipes and ducts (including color coding), hangers, exposed steel and iron supports, and surfaces of mechanical and electrical equipment that do not have a factory-applied final finish.

C. Do not paint prefinished items, concealed surfaces, operating parts, and labels.

1. Prefinished items include the following factory-finished components:

a. Finished mechanical and electrical equipment.
b. Light fixtures.

2. Concealed surfaces include walls or ceilings in the following generally inaccessible spaces:

a. Foundation spaces.
b. Furred areas.
c. Ceiling plenums.
d. Utility tunnels.
e. Pipe spaces.
f. Duct shafts.

3. Operating parts include moving parts of operating equipment and the following:

a. Valve and damper operators.
b. Linkages.
c. Sensing devices.

d. Motor and fan shafts.
e. Piping.

4. Labels: Do not paint over UL, FMG, or other code-required labels or equipment name, identification, performance rating, or nomenclature plates.

D. Related Sections include the following:

1. Division 5 Section "Structural Steel" for shop priming structural steel.
2. Division 8 Section "Standard Steel Doors and Frames" for factory priming steel doors and frames.
3. Division 9 Section "High-Performance Coatings" for industrial paints and maintenance and for special coatings.

## 1.3 DEFINITIONS

A. General: Standard coating terms defined in ASTM D 16 apply to this Section.

1. Flat refers to a lusterless or matte finish with a gloss range below 15 when measured at an 85-degree meter.
2. Eggshell refers to low-sheen finish with a gloss range between 20 and 35 when measured at a 60-degree meter.
3. Semigloss refers to medium-sheen finish with a gloss range between 35 and 70 when measured at a 60-degree meter.
4. Full gloss refers to high-sheen finish with a gloss range more than 70 when measured at a 60-degree meter.

## 1.4 SUBMITTALS

A. Product Data: For each paint system indicated. Include block fillers and primers.

1. Material List: An inclusive list of required coating materials. Indicate each material and cross-reference specific coating, finish system, and application. Identify each material by manufacturer's catalog number and general classification.
2. Manufacturer's Information: Manufacturer's technical information, including label analysis and instructions for handling, storing, and applying each coating material.

B. Samples for Initial Selection: For each type of finish-coat material indicated.

1. After color selection, Engineer will furnish color chips for surfaces to be coated.

C. Samples for Verification: For each color and material to be applied, with texture to simulate actual conditions, on representative Samples of the actual substrate.

1. Provide stepped Samples, defining each separate coat, including block fillers and primers. Use representative colors when preparing Samples for review. Resubmit until required sheen, color, and texture are achieved.
2. Provide a list of materials and applications for each coat of each Sample. Label each Sample for location and application.

3. Submit three (3) Samples on the following substrates for Engineer's review of color and texture only:

    a. Concrete: 4-inch square samples for each color and finish.
    b. Concrete Unit Masonry: 4-by-8-inch, 6-by-10-inch samples of masonry, with mortar joint in the center, for each finish and color.
    c. Painted Wood: 8-inch square Samples for each color and material on hardboard.
    d. Stained or Natural Wood: 4-by-8-inch samples of natural or stained wood finish on representative surfaces.
    e. Ferrous Metal: 3-inch square Samples of flat metal and 6-inch long Samples of solid metal for each color and finish.

D. Qualification Data: For Applicator.

## 1.5 QUALITY ASSURANCE

A. Applicator Qualifications: A firm or individual experienced in applying paints and coatings similar in material, design, and extent to those indicated for this Project, whose work has resulted in applications with a record of successful in-service performance.

B. Source Limitations: Obtain block fillers and primers for each coating system from the same manufacturer as the finish coats.

C. Benchmark Samples (Mockups): Provide a full-coat benchmark finish sample for each type of coating and substrate required. Comply with procedures specified in PDCA P5. Duplicate finish of approved sample Submittals.

1. Engineer will select one room or surface to represent surfaces and conditions for application of each type of coating and substrate.

    a. Wall Surfaces: Provide samples on at least 100 sq. ft.
    b. Small Areas and Items: Engineer will designate items or areas required.

2. Apply benchmark samples, according to requirements for the completed Work, after permanent lighting and other environmental services have been activated. Provide required sheen, color, and texture on each surface.

    a. After finishes are accepted, Engineer will use the room or surface to evaluate coating systems of a similar nature.

3. Final approval of colors will be from benchmark samples.

## 1.6 DELIVERY, STORAGE, AND HANDLING

A. Deliver materials to Project site in manufacturer's original, unopened packages and containers bearing manufacturer's name and label and the following information:

1. Product name or title of material.
2. Product description (generic classification or binder type).
3. Manufacturer's stock number and date of manufacture.

4. Contents by volume, for pigment and vehicle constituents.
5. Thinning instructions.
6. Application instructions.
7. Color name and number.
8. VOC content.

B. Store materials not in use in tightly covered containers in a well-ventilated area at a minimum ambient temperature of 45 deg F. Maintain storage containers in a clean condition, free of foreign materials and residue.

1. Protect from freezing. Keep storage area neat and orderly. Remove oily rags and waste daily.

## 1.7 PROJECT CONDITIONS

A. Apply waterborne paints only when temperatures of surfaces to be painted and surrounding air are between 50 and 90 deg F.

B. Apply solvent-thinned paints only when temperatures of surfaces to be painted and surrounding air are between 45 and 95 deg F.

C. Do not apply paint in snow, rain, fog, or mist; or when relative humidity exceeds 85 percent; or at temperatures less than 5 deg F above the dew point; or to damp or wet surfaces.

1. Painting may continue during inclement weather if surfaces and areas to be painted are enclosed and heated within temperature limits specified by manufacturer during application and drying periods.

2. Quantity: Furnish Owner with an additional 3 percent, but not less than 1 gal. or 1 case, as appropriate, of each material and color applied.

# PART 2 - PRODUCTS

## 2.1 PAINT MATERIALS, GENERAL

A. Material Compatibility: Provide block fillers, primers, and finish-coat materials that are compatible with one another and with the substrates indicated under conditions of service and application, as demonstrated by manufacturer based on testing and field experience.

B. Material Quality: Provide manufacturer's best-quality paint material of the various coating types specified that are factory formulated and recommended by manufacturer for application indicated. Paint-material containers not displaying manufacturer's product identification will not be acceptable.

1. Proprietary Names: Use of manufacturer's proprietary product names to designate colors or materials is not intended to imply that products named are required to be used to the exclusion of equivalent products of other manufacturers. Furnish manufacturer's material data and certificates of performance for proposed substitutions.

C. Colors: As selected by Engineer from manufacturer's full range.

## 2.2 INTERIOR PRIMERS

A. Interior Gypsum Board Primer: Factory-formulated latex-based primer for interior application.

1. Benjamin Moore; Moorcraft Super Spec Latex Enamel Undercoater & Primer Sealer No. 253: Applied at a dry film thickness of not less than 1.2 mils.
2. PPG Paints; SpeedHide Interior Quick-Drying Latex Sealer 6-2: Applied at a dry film thickness of not less than 1.0 mil.
3. Sherwin-Williams; PrepRite 200 Latex Wall Primer B28W200 Series: Applied at a dry film thickness of not less than 1.6 mils.

B. Interior Wood Primer for Acrylic-Enamel and Semigloss Alkyd-Enamel Finishes: Factory-formulated alkyd- or acrylic-latex-based interior wood primer.

1. Benjamin Moore; Moorcraft Super Spec Alkyd Enamel Underbody and Primer Sealer No. 245: Applied at a dry film thickness of not less than 1.5 mils.
2. PPG Paints; Seal Grip Universal Alkyd Primer 17-941NF: Applied at a dry film thickness of not less than 1.5 mils.
3. PPG Paints; Seal Grip Universal Acrylic Primer 17-921: Applied at a dry film thickness of not less than 1.5 mils.
4. Sherwin-Williams; PrepRite Wall and Wood Primer B49W200 Series: Applied at a dry film thickness of not less than 1.6 mils.
5. Sherwin-Williams; PrepRite Classic Interior Primer B28W101 Series: Applied at a dry film thickness of not less than 1.6 mils.

## 2.3 EXTERIOR FINISH COATS

A. Exterior Semigloss Acrylic Enamel: Factory-formulated semigloss waterborne acrylic-latex enamel for exterior application.

1. Benjamin Moore; Moorcraft Super Spec Latex House & Trim Paint No. 170: Applied at a dry film thickness of not less than 1.1 mils.
2. PPG Paints; SpeedHide Exterior House & Trim Semi-Gloss Acrylic Latex Paint 6-900XI Series: Applied at a dry film thickness of not less than 1.5 mils.
3. Sherwin-Williams; A-100 Latex Gloss A8 Series: Applied at a dry film thickness of not less than 1.3 mils.

## 2.4 INTERIOR FINISH COATS

A. Interior Flat Acrylic Paint: Factory-formulated flat acrylic-emulsion latex paint for interior application.

1. Benjamin Moore; Moorecraft Super Spec Latex Flat No. 275: Applied at a dry film thickness of not less than 1.2 mils.
2. PPG Paints; SpeedHide Interior Wall Flat-Latex Paint 6-70 Series: Applied at a dry film thickness of not less than 1.0 mil.

3. Sherwin-Williams; ProMar 200 Interior Latex Flat Wall Paint B30W200 Series: Applied at a dry film thickness of not less than 1.4 mils.

B. Interior Low-Luster Acrylic Enamel: Factory-formulated eggshell acrylic-latex interior enamel.

1. Benjamin Moore; Moorcraft Super Spec Latex Eggshell Enamel No. 274: Applied at a dry film thickness of not less than 1.3 mils.
2. PPG Paints; SpeedHide Eggshell Acrylic Latex Enamel 6-411 Series: Applied at a dry film thickness of not less than 1.25 mils.
3. Sherwin-Williams; ProMar 200 Interior Latex Egg-Shell Enamel B20W200 Series: Applied at a dry film thickness of not less than 1.6 mils.

C. Interior Semigloss Acrylic Enamel: Factory-formulated semigloss acrylic-latex enamel for interior application.

1. Benjamin Moore; Moorcraft Super Spec Latex Semi-Gloss Enamel No. 276: Applied at a dry film thickness of not less than 1.2 mils.
2. PPG Paints; SpeedHide Interior Semi-Gloss Latex 6-500 Series: Applied at a dry film thickness of not less than 1.0 mil.
3. Sherwin-Williams; ProMar 200 Interior Latex Semi-Gloss Enamel B31W200 Series: Applied at a dry film thickness of not less than 1.3 mils.

D. Interior Semigloss Alkyd Enamel: Factory-formulated semigloss alkyd enamel for interior application.

1. Benjamin Moore; Moorcraft Super Spec Alkyd Semi-Gloss Enamel No. 271: Applied at a dry film thickness of not less than 1.4 mils.
2. PPG Paints; SpeedHide Interior/Exterior WB Alkyd Semi-Gloss 6-1510 Series: Applied at a dry film thickness of not less than 1.4 mils.
3. Sherwin-Williams; ProMar 200 Interior Alkyd Semi-Gloss Enamel B34W200 Series: Applied at a dry film thickness of not less than 1.7 mils.

## PART 3 - EXECUTION

### 3.1 EXAMINATION

A. Examine substrates, areas, and conditions, with Applicator present, for compliance with requirements for paint application.

1. Proceed with paint application only after unsatisfactory conditions have been corrected and surfaces receiving paint are thoroughly dry.
2. Start of painting will be construed as Applicator's acceptance of surfaces and conditions within a particular area.

B. Coordination of Work: Review other Sections in which primers are provided to ensure compatibility of the total system for various substrates. On request, furnish information on characteristics of finish materials to ensure use of compatible primers.

1. Notify Engineer about anticipated problems when using the materials specified over substrates primed by others.

## 3.2 PREPARATION

A. General: Remove hardware and hardware accessories, plates, machined surfaces, lighting fixtures, and similar items already installed that are not to be painted. If removal is impractical or impossible because of size or weight of the item, provide surface-applied protection before surface preparation and painting.

1. After completing painting operations in each space or area, reinstall items removed using workers skilled in the trades involved.

B. Cleaning: Before applying paint or other surface treatments, clean substrates of substances that could impair bond of the various coatings. Remove oil and grease before cleaning.

1. Schedule cleaning and painting so dust and other contaminants from the cleaning process will not fall on wet, newly painted surfaces.

C. Surface Preparation: Clean and prepare surfaces to be painted according to manufacturer's written instructions for each particular substrate condition and as specified.

1. Provide barrier coats over incompatible primers or remove and reprime.

2. Wood: Clean surfaces of dirt, oil, and other foreign substances with scrapers, mineral spirits, and sandpaper, as required. Sand surfaces exposed to view smooth and dust off.

a. Scrape and clean small, dry, seasoned knots, and apply a thin coat of white shellac or other recommended knot sealer before applying primer. After priming, fill holes and imperfections in finish surfaces with putty or plastic wood filler. Sand smooth when dried.
b. Prime, stain, or seal wood to be painted immediately on delivery. Prime edges, ends, faces, undersides, and back sides of wood, including cabinets, counters, cases, and paneling.
c. If transparent finish is required, backprime with spar varnish.
d. Backprime paneling on interior partitions where masonry, plaster, or other wet wall construction occurs on backside.
e. Seal tops, bottoms, and cutouts of unprimed wood doors with a heavy coat of varnish or sealer immediately on delivery.

D. Material Preparation: Mix and prepare paint materials according to manufacturer's written instructions.

1. Maintain containers used in mixing and applying paint in a clean condition, free of foreign materials and residue.
2. Stir material before application to produce a mixture of uniform density. Stir as required during application. Do not stir surface film into material. If necessary, remove surface film and strain material before using.
3. Use only thinners approved by paint manufacturer and only within recommended limits.

E. Tinting: Tint each undercoat a lighter shade to simplify identification of each coat when multiple coats of same material are applied. Tint undercoats to match the color of the finish coat, but provide sufficient differences in shade of undercoats to distinguish each separate coat.

## 3.3 APPLICATION

A. General: Apply paint according to manufacturer's written instructions. Use applicators and techniques best suited for substrate and type of material being applied.

1. Paint colors, surface treatments, and finishes are indicated in the paint schedules.
2. Do not paint over dirt, rust, scale, grease, moisture, scuffed surfaces, or conditions detrimental to formation of a durable paint film.
3. Provide finish coats that are compatible with primers used.
4. The term "exposed surfaces" includes areas visible when permanent or built-in fixtures, grilles, convector covers, covers for finned-tube radiation, and similar components are in place. Extend coatings in these areas, as required, to maintain system integrity and provide desired protection.
5. Paint surfaces behind movable equipment and furniture the same as similar exposed surfaces. Before final installation of equipment, paint surfaces behind permanently fixed equipment or furniture with prime coat only.
6. Paint interior surfaces of ducts with a flat, nonspecular black paint where visible through registers or grilles.
7. Paint backsides of access panels and removable or hinged covers to match exposed surfaces.
8. Finish exterior doors on tops, bottoms, and side edges the same as exterior faces.
9. Finish interior of wall and base cabinets and similar field-finished casework to match exterior.
10. Sand lightly between each succeeding enamel or varnish coat.

B. Scheduling Painting: Apply first coat to surfaces that have been cleaned, pretreated, or otherwise prepared for painting as soon as practicable after preparation and before subsequent surface deterioration.

1. The number of coats and film thickness required are the same regardless of application method. Do not apply succeeding coats until previous coat has cured as recommended by manufacturer. If sanding is required to produce a smooth, even surface according to manufacturer's written instructions, sand between applications.
2. If undercoats, stains, or other conditions show through final coat of paint, apply additional coats until paint film is of uniform finish, color, and appearance. Give special attention to ensure that edges, corners, crevices, welds, and exposed fasteners receive a dry film thickness equivalent to that of flat surfaces.
3. Allow sufficient time between successive coats to permit proper drying. Do not recoat surfaces until paint has dried to where it feels firm, and does not deform or feel sticky under moderate thumb pressure, and until application of another coat of paint does not cause undercoat to lift or lose adhesion.

C. Application Procedures: Apply paints and coatings by brush, roller, spray, or other applicators according to manufacturer's written instructions.

1. Brushes: Use brushes best suited for type of material applied. Use brush of appropriate size for surface or item being painted.
2. Rollers: Use rollers of carpet, velvet-back, or high-pile sheep's wool as recommended by manufacturer for material and texture required.
3. Spray Equipment: Use airless spray equipment with orifice size as recommended by manufacturer for material and texture required.

D. Minimum Coating Thickness: Apply paint materials no thinner than manufacturer's recommended spreading rate to achieve dry film thickness indicated. Provide total dry film thickness of the entire system as recommended by manufacturer.

E. Mechanical and Electrical Work: Painting of mechanical and electrical work is limited to items exposed in equipment rooms and occupied spaces.

F. Mechanical items to be painted include, but are not limited to, the following:

1. Uninsulated metal piping.
2. Uninsulated plastic piping.
3. Pipe hangers and supports.
4. Tanks that do not have factory-applied final finishes.
5. Visible portions of internal surfaces of metal ducts, without liner, behind air inlets and outlets.
6. Duct, equipment, and pipe insulation having "all-service jacket" or other paintable jacket material.
7. Mechanical equipment that is indicated to have a factory-primed finish for field painting.

G. Electrical items not to be painted include, but are not limited to, the following:

1. Switchgear.
2. Panelboards.
3. Electrical equipment that is indicated to have a factory-primed finish for field painting.

H. Prime Coats: Before applying finish coats, apply a prime coat, as recommended by manufacturer, to material that is required to be painted or finished and that has not been prime coated by others. Recoat primed and sealed surfaces where evidence of suction spots or unsealed areas in first coat appears, to ensure a finish coat with no burn-through or other defects due to insufficient sealing.

I. Pigmented (Opaque) Finishes: Completely cover surfaces as necessary to provide a smooth, opaque surface of uniform finish, color, appearance, and coverage. Cloudiness, spotting, holidays, laps, brush marks, runs, sags, ropiness, or other surface imperfections will not be acceptable.

J. Transparent (Clear) Finishes: Use multiple coats to produce a glass-smooth surface film of even luster. Provide a finish free of laps, runs, cloudiness, color irregularity, brush marks, orange peel, nail holes, or other surface imperfections.

1. Provide satin finish for final coats.

K. Stipple Enamel Finish: Roll and redistribute paint to an even and fine texture. Leave no evidence of rolling, such as laps, irregularity in texture, skid marks, or other surface imperfections.

L. Completed Work: Match approved samples for color, texture, and coverage. Remove, refinish, or repaint work not complying with requirements.

## 3.4 PIPING COLOR AND LABEL SCHEDULE

A. All piping colors and labeling shall comply with the latest edition of Recommended Standards for Waste Water Facilities. The following schedule shall apply:

1. Raw sludge line - brown with black bands
2. Sludge recirculation suction line - brown with yellow bands
3. Sludge draw off line - brown with orange bands
4. Sludge recirculation discharge line - brown
5. Natural gas line- orange (or red) with black bands
6. Non-potable water line- blue with black bands
7. Potable water line - blue
8. Chlorine line - yellow
9. Sewage (wastewater) line- gray
10. Compressed air line - green
11. Fuel oil/diesel - red
12. Plumbing drains and vents - black
13. Polymer - purple

## 3.5 FIELD QUALITY CONTROL

A. Owner reserves the right to invoke the following test procedure at any time and as often as Owner deems necessary during the period when paint is being applied:

1. Owner may direct Contractor to stop painting if test results show material being used does not comply with specified requirements. Contractor shall remove noncomplying paint from Project site, pay for testing, and repaint surfaces previously coated with the noncomplying paint. If necessary, Contractor may be required to remove noncomplying paint from previously painted surfaces if, on repainting with specified paint, the two coatings are incompatible.

## 3.6 CLEANING

A. Cleanup: At the end of each workday, remove empty cans, rags, rubbish, and other discarded paint materials from Project site.

1. After completing painting, clean glass and paint-spattered surfaces. Remove spattered paint by washing and scraping without scratching or damaging adjacent finished surfaces.

## 3.7 PROTECTION

A. Protect work of other trades, whether being painted or not, against damage from painting. Correct damage by cleaning, repairing or replacing, and repainting, as approved by Engineer.

B. Provide "Wet Paint" signs to protect newly painted finishes. After completing painting operations, remove temporary protective wrappings provided by others to protect their work.

1. After work of other trades is complete, touch up and restore damaged or defaced painted surfaces. Comply with procedures specified in PDCA P1.

C. Wood Trim: Provide the following finish systems over exterior wood trim:

1. Semigloss Acrylic-Enamel Finish: Two finish coats over a primer.

a. Primer: Exterior wood primer for acrylic enamels.
b. Finish Coats: Exterior semigloss acrylic enamel.

D. Ferrous Metal: Provide the following finish systems over exterior ferrous metal. Primer is not required on shop-primed items.

1. Semigloss Acrylic-Enamel Finish: Two finish coats over a rust-inhibitive primer.

a. Primer: Exterior ferrous-metal primer.
b. Finish Coats: Exterior semigloss acrylic enamel.

## 3.8 INTERIOR PAINT SCHEDULE

A. Gypsum Board: Provide the following finish systems over interior gypsum board surfaces:

1. Flat Acrylic Finish: Two finish coats over a primer.

a. Primer: Interior gypsum board primer.
b. Finish Coats: Interior flat acrylic paint.

2. Low-Luster Acrylic-Enamel Finish: Two finish coats over a primer.

a. Primer: Interior gypsum board primer.
b. Finish Coats: Interior low-luster acrylic enamel.

B. Wood and Hardboard: Provide the following paint finish systems over new interior wood surfaces:

1. Low-Luster Acrylic-Enamel Finish: Two finish coats over a primer.

a. Primer: Interior wood primer for acrylic-enamel and semigloss alkyd-enamel finishes.
b. Finish Coats: Interior low-luster acrylic enamel.

END OF SECTION 09912

SECTION 09960 - HIGH-PERFORMANCE COATINGS

PART 1 - GENERAL

1.1 RELATED DOCUMENTS

A. Drawings and general provisions of the Contract, including General and Supplementary Conditions and Division 1 Specification Sections, apply to this Section.

1.2 SUMMARY

A. This Section includes surface preparation and field application of high-performance coating systems to items and surfaces scheduled.

B. Related Sections include the following:

1. Division 5 Section "Structural Steel" for shop priming structural steel.
2. Division 9 Section "Painting" for general field painting.

1.3 DEFINITIONS

A. Standard coating terms defined in ASTM D 16 apply to this Section.

B. Gloss ranges used in this Section include the following:

1. Semigloss refers to medium-sheen finish with a gloss range between 30 and 65 when measured at a 60-degree meter.
2. High gloss refers to high-sheen finish with a gloss range more than 65 when measured at a 60-degree meter.

C. Environments: The following terms are used in Part 2 of this Section to distinguish between different corrosive exposures:

1. "Severe environments" are highly corrosive industrial atmospheres with sustained exposure to submergence, high humidity and condensation and with frequent cleaning using strong chemicals. Environments with heavy concentrations of strong chemical fumes and frequent splashing and spilling of harsh chemical products are severe environments.
2. "Moderate environments" are corrosive industrial atmospheres with intermittent exposure to high humidity and condensation, occasional mold and mildew development, and regular cleaning with strong chemicals. Environments with exposure to heavy concentrations of chemical fumes and occasional splashing and spilling of chemical products are moderate environments.
3. "Mild environments" are industrial atmospheres with normal exposure to moderate humidity and condensation, occasional mold and mildew development, and infrequent cleaning with strong chemicals. Environments with low levels of mild

chemical fumes and occasional splashing and spilling of chemical products are mild environments. Normal outdoor weathering is also considered a mild environment.

## 1.4 SUBMITTALS

A. Product Data: For each coating system indicated. Include block fillers and primers.

1. Material List: An inclusive list of required coating materials. Indicate each material and cross-reference the specific coating, finish system, and application. Identify each material by manufacturer's catalog number and general classification.
2. Manufacturer's Information: Manufacturer's technical information, including label analysis and instructions for handling, storing, and applying each material specified.

B. Certification by manufacturer that products supplied comply with requirements indicated that limit the amount of VOCs in coating products.

C. Samples for Initial Selection: Manufacturer's color charts showing the full range of colors available for each type of finish-coat material indicated.

1. After color selection, Engineer will furnish color chips for surfaces to be coated.

D. Samples for Verification: For each color and material to be applied, with texture to simulate actual conditions, on representative samples of the actual substrate.

1. Provide stepped Samples defining each separate coat, including block fillers and primers. Use representative colors when preparing Samples for review. Resubmit until required sheen, color, and texture are achieved.
2. List of material and application for each coat of each sample. Label each sample for location and application.
3. Submit samples on the following substrates for Engineer's review of color and texture:

a. Ferrous and Nonferrous Metal: Provide two 4-inch- square samples of flat metal and two 8-inch- long samples of solid metal for each color and finish.

E. Qualification Data: For firms and persons specified in "Quality Assurance" Article to demonstrate their capabilities and experience. Include lists of completed projects with project names and addresses, names and addresses of Engineers and owners, and other information specified.

## 1.5 QUALITY ASSURANCE

A. Applicator Qualifications: Engage an experienced applicator who has completed high-performance coating system applications similar in material and extent to those indicated for Project and whose work has a record of successful in-service performance.

B. Source Limitations: Obtain primers and undercoat materials for each coating system from the same manufacturer as the finish coats.

C. Benchmark Samples (Mockups): Provide a full-coat benchmark finish sample of each type of coating and substrate required. Comply with procedures specified in PDCA P5. Duplicate finish of approved sample Submittals.

1. Engineer will select one room, area, or surface to represent surfaces and conditions for application of each type of coating and substrate.

a. Wall Surfaces: Provide samples on at least 100 sq. ft. (9 sq. m) of wall surface.
b. Small Areas and Items: Engineer will designate items or areas required.

2. After permanent lighting and other environmental services have been activated, apply coatings in this room or to each surface as specified. Provide the required sheen, color, and texture of each surface.

a. After finishes are accepted, Engineer will use the room or surface to evaluate coating systems of a similar nature.

3. Final approval of colors will be from benchmark samples.

## 1.6 DELIVERY, STORAGE, AND HANDLING

A. Deliver materials to Project site in manufacturer's original, unopened packages and containers bearing manufacturer's name and label with the following information:

1. Name or title of material.
2. Product description (generic classification or binder type).
3. Manufacturer's stock number and date of manufacture.
4. Contents by volume, for pigment and vehicle constituents.
5. Thinning instructions.
6. Application instructions.
7. Color name and number.
8. Handling instructions and precautions.

B. Store materials not in use in tightly covered containers in a well-ventilated area at a minimum ambient temperature of 45 deg F (7 deg C). Maintain containers used in storage in a clean condition, free of foreign materials and residue.

1. Protect materials from freezing. Keep storage area neat and orderly. Remove oily rags and waste daily. Take necessary measures to ensure that workers and work areas are protected from fire and health hazards resulting from handling, mixing, and applying coatings.

## 1.7 PROJECT CONDITIONS

A. Apply coatings only when temperature of surfaces to be coated and surrounding air temperatures are between 45 and 95 deg F (7 and 35 deg C).

B. Do not apply coatings in snow, rain, fog, or mist; when relative humidity exceeds 85 percent; at temperatures less than 5 deg F (3 deg C) above the dew point; or to damp or wet surfaces.

1. Allow wet surfaces to dry thoroughly and attain temperature and conditions specified before proceeding with or continuing coating operation.
2. Work may continue during inclement weather only if areas and surfaces to be coated are enclosed and temperature within the area can be maintained within limits specified by manufacturer during application and drying periods.

1.8 EXTRA MATERIALS

A. Furnish extra high-performance coating materials from the same production run as materials applied and in quantities described below. Package coating materials in unopened, factory-sealed containers for storage and identify with labels describing contents.

1. Quantity: Furnish an additional 5 percent, but not less than 1 gal. (3.785 L) or 1 case, as appropriate, of each material and color applied.

PART 2 - PRODUCTS

2.1 COATINGS MATERIALS, GENERAL

A. Material Compatibility: Provide primers, undercoats, and finish-coat materials that are compatible with one another and substrates indicated under conditions of service and application, as demonstrated by manufacturer based on testing and field experience.

B. Material Quality: Provide manufacturer's highest grade of the various high-performance coatings specified. Materials not displaying manufacturer's product identification are not acceptable.

1. Proprietary Names: Use of manufacturer's proprietary product names to designate colors or materials is not intended to imply that products named are required to be used to the exclusion of equivalent products of other manufacturers. Furnish manufacturer's material data and certificates of performance for proposed substitutions.

C. VOC Classification: Provide high-performance coating materials, including primers, undercoats, and finish-coat materials, that have a VOC classification of 450 g/L or less.

2.3 COATING MATERIALS

D. Ferrous Metal: Provide the following finish systems over ferrous-metal surfaces; applied at spreading rate recommended by manufacturer.

1. Interior, Non-Submerged: One finish coat over an intermediate coat and a primer.

a. Primer:
1) Tnemec: 37H Chem Prime HS or 66-1211, 3.0-4.0 mils dft.
2) Carboline/Kop Coat: Rustarmor 29 or Carboline D898 LT, 2.0-3.0 mils dft.
3) PPG: Multiprime Quick-Dry Universal Primer 97-680, 3.0-4.0 mils dft.
4) Sherwin Williams: Macropoxy 646 FC, 3.0-4.0 mils dft,

b. Intermediate Coat:
   1) Tnemec: 66 Epoxoline HB, 3.0-4.0 mils dft.
   2) Carboline/Kop Coat: Carbomastic 801, 3.0-4.0 mils dft.
   3) PPG: Pitt-Guard All Weather DTR Epoxy Mastic 97-946 series, 3.0-4.0 mils dft.
   4) Sherwin Williams: Macropoxy 646 FC at 3.0-4.0 mils dft.

c. Topcoat:
   1) Tnemec: 66 Epoxoline HB, 3.0-4.0 mils dft.
   2) Carboline/Kop Coat: Carbomastic 801, 3.0-4.0 mils dft.
   3) PPG: Pitt-Guard DTR Epoxy Mastic 97-145 series, 3.0-4.0 mils dft.
   4) Sherwin Williams: Macropoxy, 3.0-4.0 mils dft.

2. Exterior, Non-Submerged: One finish coat over an intermediate coat and a primer.

a. Primer:
   1) Tnemec: 37H Chem Prime HS or 66-1211, 3.0-4.0 mils dft.
   2) Carboline/Kop Coat: Rustarmor 29 or Carboline D898 LT, 2.0-3.0 mils dft.
   3) PPG: Multiprime Quick-Dry Universal Primer 97-680, 3.0-4.0 mils dft.
   4) Sherwin Williams: Kem Bond HS, 2.0-5.0 mils dft,

b. Intermediate Coat:
   1) Tnemec: 66 Epoxoline HB, 4.0-6.0 mils dft.
   2) Carboline/Kop Coat: Carbomastic 801, 4.0-6.0 mils dft.
   3) PPG: Pitt-Guard All Weather DTR Epoxy Mastic 97-946 series, 3.0-4.0 mils dft.
   4) Sherwin Williams: Macropoxy 646 FC 4.0-6.0 mils dft,

c. Topcoat:
   1) Tnemec: 73 Endura-Shield, 1.5-2.5 mils dft.
   2) Carboline/Kop Coat: Carbothane 134 HS, 1.5-2.5 mils dft.
   3) PPG: Pitthane Ultra, 1.5-2.5 mils dft.
   4) Sherwin Williams Hi-Solids Polyurethane 3.0-5.0 mils dft.

3. Submerged: One finish coat over an intermediate coat and a primer.

a. Primer:
   1) Tnemec: 37H Chem Prime HS or 66-1211, 3.0-4.0 mils dft.
   2) Carboline/Kop Coat: 340 Gold Primer, 2.0-3.0 mils dft.
   3) PPG: Pitt-Guard 97-946, 3.0-4.0 mils dft.
   4) Sherwin Williams: Macropoxy 646 FC 4.0-6.0 mils dft,

b. Intermediate Coat:
   1) Tnemec: 66 Epoxoline HB, 4.0-6.0 mils dft.
   2) Carboline/Kop Coat: Super Hi-Gard 891, 4.0-6.0 mils dft.
   3) PPG: Pitt-Guard All Weather DTR Epoxy Mastic 97-946, 4.0-6.0 mils dft.
   4) Sherwin Williams: Macropoxy 646 FC 4.0-6.0 mils dft,

c. Topcoat:
   1) Tnemec: 66 Epoxoline HB, 4.0-6.0 mils dft.
   2) Carboline/Kop Coat: Super Hi-Gard 891, 4.0-6.0 mils dft.

3) PPG: Pitt-Guard DTR Epoxy Mastic 97-145, 4.0-6.0 mils dft.
4) Sherwin Williams: Macropoxy 646 FC 4.0-6.0 mils dft,

4. Surfaces Exposed to heat above 200 deg. F: One finish coat over an intermediate coat.

a. Intermediate Coat:
1) Tnemec: 39-661 Hot Surface Aluminum, 1.3-1.7 mils dft.
2) Carboline/Kop Coat: Carbo Zinc 11 HS, 1.3-1.7 mils dft.
3) PPG: Hi-Temp Coatings 222G, 4.0-8.0 mils dft.
4) Sherwin Williams: HEAT-FLEX® II 450 Aluminum @ 1.0-1.5 mils dft,

b. Topcoat:
1) Tnemec: 39-661 Hot Surface Aluminum, 1.3-1.7 mils dft.
2) Carboline/Kop Coat: Carbo Zinc 11 VOC, 1.3-1.7 mils dft.
3) Sherwin Williams: HEAT-FLEX® II 450 Aluminum @ 1.0-1.5 mils dft,
4) PPG: Hi-Temp Coatings 500VS, 2.0-2.5 mils dft.

5. Encased in Concrete: One primer coat.

a. Primer:
1) PPG: Amercoat 78HB Coal Tar Epoxy, 6.0-7.0 mils dft.
2) Sherwin Williams: Macropoxy 646 FC @ 3.0- 5.0 mils dft, 2.0-3.0 mils dft.

6. Galvanized Surfaces: One finish coat over an intermediate coat.

a. Intermediate Coat:
1) Tnemec: 66 Epoxoline HB, 2.5-3.5 mils dft.
2) Carboline/Kop Coat: Rustbond Penetrating Sealer, 1.0-3.0 mils dft.
3) PPG: Pitt-Guard All Weather Epoxy 97-946, 2.5-3.5 mils dft,
4) Sherwin Williams: Macropoxy 646 FC 2.5-3.5 mils dft,

b. Topcoat:
1) Tnemec: 66 Epoxoline HB, 2.5-3.5 mils dft.
2) Carboline/Kop Coat: Carbomastic 801, 4.0-6.0 mils dft.
3) PPG: Pitt-Guard DTR Epoxy Mastic 97-145 series, 4.0-6.0 mils dft.
4) Sherwin Williams: Macropoxy 646 FC 2.5-3.5 mils dft,

E. Nonferrous Metal: Provide the following finish systems over nonferrous-metal surfaces; applied at spreading rate recommended by manufacturer.

1. Intermediate Coat:

a. Tnemec: 66 Epoxoline HB, 2.5-3.5 mils dft.
b. Carboline/Kop Coat: Rustbond Penetrating Sealer, 1.0-3.0 mils dft.
c. Sherwin Williams: Macropoxy 646 FC 2.5-3.5 mils dft,

d. PPG: Pitt-Guard All Weather Epoxy 97-946, 2.5-3.5 mils dft.

2. Topcoat:

a. Tnemec: 66 Epoxoline HB, 2.5-3.5 mils dft.
b. Carboline/Kop Coat: Carbomastic 801, 4.0-6.0 mils dft.
c. Sherwin Williams: Macropoxy 646 FC 2.5-3.5 mils dft,

d. PPG: Pitt-Guard DTR Epoxy Mastic 97-145 series, 4.0-6.0 mils dft.

F. Concrete Surfaces: Provide the following finish systems over concrete surfaces; applied at spreading rate recommended by manufacturer.

1. Submerged: One finish coat over an intermediate coat.

a. Intermediate Coat:
1) Tnemec: 46H-413 HB Tneme- tar, 8.0-10.0 mils dft, thinned 5%.
2) Carboline/Kop Coat: Bitumastic 300M, 8.0-10.0 mils dft, thinned 5%.
3) PPG: Amercoat 78HB Coal Tar Epoxy, 8.0-10.10 mils dft.
4) Sherwin Williams: Hi-Mil Sher-Tar, 8.0-10.0 mils dft, thinned 5%.

b. Topcoat:
1) Tnemec: 46H-413 HB Tneme- tar, 8.0-10.0 mils dft.
2) Carboline/Kop Coat: Bitumastic 300M, 8.0-10.0 mils dft.
3) PPG: Amercoat 78HB Coal Tar Epoxy, 8.0-10.0 mils dft.
4) Sherwin Williams Hi-Mil Sher-Tar, 8.0-10.0 mils dft.

2. Interior, Ceilings: One finish coat over an intermediate coat.

a. Intermediate Coat:
1) Tnemec: 66 Epoxoline HB, 3.0-4.0 mils dft, thinned 5%.
2) Carboline/Kop Coat: Carbomastic 801, 3.0-4.0 mils dft, thinned 5%.
3) PPG: Pitt-Guard All Weather Epoxy 97-946, 3.0-4.0 mils dft.
4) Sherwin Williams: Macropoxy 646 FC 3.0-4.0 mils dft, thinned 5%.

b. Topcoat:
1) Tnemec: 66 Epoxoline HB, 3.0-4.0 mils dft.
2) Carboline/Kop Coat: Carbomatic 801, 3.0-4.0 mils dft.
3) PPG: Pitt-Guard DTR Epoxy Mastic 97-145 series, 3.0-4.0 mils dft.
4) Sherwin Williams: Macropoxy 646 FC 3.0-4.0 mils dft.

3. Interior, Walls: One finish coat over an intermediate coat.

a. Intermediate Coat:
1) Tnemec: 66 Epoxoline HB, 3.0-4.0 mils dft, thinned 5%.
2) Carboline/Kop Coat: Carbomastic 801, 3.0-4.0 mils dft, thinned 5%.
3) PPG: Pitt-Guard All Weather Epoxy 97-946, 3.0-4.0 mils dft.
4) Sherwin Williams: Macropoxy 646 FC 3.0-4.0 mils dft, thinned 5%.

b. Topcoat:
1) Tnemec: 66 Epoxoline HB, 5.0-6.0 mils dft.
2) Carboline/Kop Coat: Carbomatic 801, 5.0-6.0 mils dft.
3) PPG: Pitt-Guard DTR Epoxy Mastic 97-145 series, 3.0-4.0 mils dft.
4) Sherwin Williams: Macropoxy 646 FC 5.0-6.0 mils dft,

4. Exterior, Walls: One finish coat over an intermediate coat.

   a. Intermediate Coat:
      1) Tnemec: 52 Tneme-crete, 8.0-10.0 mils dft.
      2) Carboline/Kop Coat: Flexxide B Smooth, 8.0-10.0 mils dft.
      3) PPG: Pitt-Flex Elastomeric 4-110, 6.5-8.5 mils dft.
      4) Sherwin Williams: Cement Plex 875, 10.0-12.0.

   b. Topcoat:
      1) Tnemec: 52 Tneme-crete, 8.0-10.0 mils dft.
      2) Carboline/Kop Coat: Flexxide B Fine, 8.0-10.0 mils dft.
      3) PPG: Pitt-Flex Elastomeric 4-110, 6.5-8.5 mils dft.
      4) Sherwin Williams: Loxon Smooth 6.0-8.0 mils dft,

5. Floors, Non-Submerged: One finish coat over an intermediate coat and a primer.

   a. Primer:
      1) Tnemec: 66 Epoxoline HB, 2.0-3.0 mils dft, thinned 5%.
      2) Carboline/Kop Coat: 890, 2.0-3.0 mils dft, thinned 5%.
      3) PPG: Pitt-Guard All Weather Epoxy 97-946, 2.0-3.0 mils dft.
      4) Sherwin Williams: Macropoxy 646 FC 2.0-3.0 mils dft, thinned 5%.

   b. Intermediate Coat:
      1) Tnemec: 66 Epoxoline HB, 3.0-4.0 mils dft.
      2) Carboline/Kop Coat: 890, 3.0-4.0 mils dft.
      3) PPG: Pitt-Guard All Weather Epoxy 97-946, 3.0-4.0 mils dft.
      4) Sherwin Williams: Macropoxy 646 FC 3.0-4.0 mils dft,

   c. Topcoat:
      1) Tnemec: 66 Epoxoline HB, 3.0-4.0 mils dft.
      2) Carboline/Kop Coat: 890, 3.0-4.0 mils dft.
      3) PPG: Pitt-Guard DTR Epoxy Mastic 97-145 series, 3.0-4.0 mils dft.
      4) Sherwin Williams: Macropoxy 646 FC 3.0-4.0 mils dft,

6. Non-Slip Floors, Non-Submerged: One finish coat over an intermediate coat, a primer and a non-slip additive.

   a. Primer:
      1) Tnemec: 66 Epoxoline HB, 2.0 – 3.0 mils dft, thinned 5%.
      2) Carboline/Kop Coat: 890, 2.0 – 3.0 mils dft, thinned 5%.
      3) PPG: Pitt-Guard All Weather Epoxy 97-946, 2.0 – 3.0 mils dft.
      4) Sherwin Williams: Macropoxy 646 FC 2.0 – 3.0 mils dft,

   b. Intermediate Coat:
      1) Tnemec: 104 HS Epoxy, 3.0 – 4.0 mils dft.
      2) Carboline/Kop Coat: 890, 3.0 – 4.0 mils dft.
      3) PPG: Pitt-Guard All Weather Epoxy 97-946, 3.0 – 4.0 mils dft.
      4) Sherwin Williams: Macropoxy 646 FC 3.0 – 4.0 mils dft,

   c. Topcoat:
      1) Tnemec: 104 HS Epoxy, 3.0-4.0 mils dft.

2) Carboline/Kop Coat: 890, 3.0-4.0 mils dft.
3) PPG: Pitt-Guard DTR Epoxy Mastic 97-145 series, 3.0 – 4.0 mils dft.
4) Sherwin Williams: Macropoxy 646 FC 3.0 – 4.0 mils dft,

d. Non-Slip Additive:
1) Tnemec: Al2O3 #24 broadcast at 3.0 – 4.0 pounds per 100 SF, divided between the primer and 2ND coats.
2) Carboline/Kop Coat: Al2O3 #24 broadcast at 3.0 – 4.0 pounds per 100 SF, divided between the primer and 2ND coats.
3) PPG: Amercoat 888 Non-Skid Additive, broadcast as desired between the 2nd and 3rd coat.
4) Sherwin Williams: Broadcast or incorporate Shark Grip on/in the 3rd coat at a rate of 1.0 – 1.5 pounds per gallon paint.

G. Unit Masonry Assemblies: Provide the following finish systems over unit masonry surfaces; applied at spreading rate recommended by manufacturer.

1. Primer:
a. Tnemec: 130 Envirofill, 75-100 SF per gallon.
b. Carboline/Kop Coat: Flexxide Masonry Block Filler, 75-100 SF per gallon.
c. PPG: Pitt-Glaze Int/Ext Block Filler 16-90, 75-100 SF per gallon.
d. Sherwin Williams Heavy Duty Block Filler, 75-100 SF per gallon.

2. Intermediate Coat:
a. Tnemec: 66 Epoxoline HB, 3.0-4.0 mils dft, thinned 5%.
b. Carboline/Kop Coat: Carbomastic 801, 3.0 – 4.0 mils dft, thinned 5%.
c. PPG: Pitt-Guard All Weather Epoxy 97-946, 3.0-4.0 mils dft.
d. Sherwin Williams: Macropoxy 646 FC 3.0 – 4.0 mils dft, thinned 5%.

3. Topcoat:
a. Tnemec: 66 Epoxoline HB, 3.0-4.0 mils dft.
b. Carboline/Kop Coat: Carbomatic 801, 3.0 – 4.0 mils dft.
c. PPG: Pitt-Guard DTR Epoxy Mastic 97-145 series, 3.0 – 4.0 mils dft.
d. Sherwin Williams: Macropoxy 646 FC 3.0 – 4.0 mils dft.

## PART 3 - EXECUTION

### 3.1 EXAMINATION

A. With Applicator present, examine substrates and conditions under which high-performance coatings will be applied, for compliance with coating application requirements.

1. Apply coatings only after unsatisfactory conditions have been corrected and surfaces to receive coatings are thoroughly dry.
2. Start of application is construed as Applicator's acceptance of surfaces within that particular area.

B. Coordination of Work: Review other Sections in which primers or other coatings are provided to ensure compatibility of total systems for various substrates. On request, furnish information on characteristics of specified finish materials to ensure compatible primers.

1. If a potential incompatibility of primers applied by others exists, obtain the following from the primer Applicator before proceeding:

a. Confirmation of primer's suitability for expected service conditions.
b. Confirmation of primer's ability to be top coated with materials specified.

2. Notify Engineer about anticipated problems before using the coatings specified over substrates primed by others.

## 3.2 PREPARATION

A. General: Remove plates, machined surfaces, and similar items already in place that are not to be coated. If removal is impractical or impossible because of size or weight of item, provide surface-applied protection before surface preparation and coating.

1. After completing coating operations, reinstall items that were removed; use workers skilled in the trades involved.

B. Cleaning: Before applying high-performance coatings, clean substrates of substances that could impair bond of coatings. Remove oil and grease before cleaning.

1. Schedule cleaning and coating application so dust and other contaminates from cleaning process will not fall on wet, newly coated surfaces.

C. Surface Preparation: Clean and prepare surfaces to be coated according to manufacturer's written instructions for each substrate condition and as specified.

1. Provide barrier coats over incompatible primers or remove primers and reprime substrate.
2. Cementitious Substrates: Prepare concrete in accordance with SSPC-SP 13/NACE #6 Surface Preparation of Concrete. Prepare brick by making certain it is clean. Pressure wash with a light detergent if necessary. Concrete masonry block should be prepared in accordance with ASTM D4261 - 05 Standard Practice for Surface Cleaning Concrete Masonry Units for Coating. Remove efflorescence, chalk, dust, dirt, grease, oils, and release agents per the standard.
3. 
a. Determine alkalinity and moisture content of surfaces by performing appropriate tests. If surfaces are sufficiently alkaline to cause the finish paint to blister and burn, correct this condition before application. Do not coat surfaces if moisture content exceeds that permitted in manufacturer's written instructions.

4. Ferrous-Metal Substrates: Clean ungalvanized ferrous-metal surfaces that have not been shop coated; remove oil, grease, dirt, loose mill scale, and other foreign substances. Use solvent or mechanical cleaning methods that comply with SSPC recommendations.

a. Blast-clean steel surfaces as recommended by coating manufacturer and according to SSPC-SP 10/NACE No. 2 for immersion service and for non-immersion service – prepare the ferrous metal in accordance with Commercial Blast Clean SSPC-SP 6/NACE #3
b. Treat bare and sandblasted or pickled clean metal with a metal treatment wash coat before priming.
c. Touch up bare areas and shop-applied prime coats that have been damaged. Wire brush, solvent clean, and touch up with same primer as the shop coat.

5. Nonferrous-Metal Substrates: Prepare nonferrous and galvanized surfaces according to SSPC SP 16 "Brush-off Blast Cleaning of Coated and Uncoated Galvanized Steel, Stainless Steels, and Non-ferrous Metals." Remove pretreatment from galvanized sheet metal fabricated from coil stock by mechanical methods.

D. Material Preparation: Carefully mix and prepare coating materials according to manufacturer's written instructions.

1. Maintain containers used in mixing and applying coatings in a clean condition, free of foreign materials and residue.
2. Stir materials before applying to produce a mixture of uniform density. Stir as required during application. Do not stir surface film into the material. Remove film and, if necessary, strain coating material before using.
3. Use only the type of thinners approved by manufacturer and only within recommended limits.

E. Tint each undercoat a lighter shade to facilitate identification of each coat if multiple coats of the same material are to be applied. Tint undercoats to match color of finish coat, but provide sufficient difference in shade of undercoats to distinguish each separate coat.

## 3.3 APPLICATION

A. General: Apply high-performance coatings according to manufacturer's written instructions.

1. Use applicators and techniques best suited for the material being applied.
2. Do not apply high-performance coatings over dirt, rust, scale, grease, moisture, scuffed surfaces, or conditions detrimental to forming a durable coating film.
3. Coating colors, surface treatments, and finishes are indicated in the coating system descriptions.
4. Provide finish coats compatible with primers used.
5. The term "exposed surfaces" includes areas visible when permanent or built-in fixtures, convector covers, grilles, covers for finned-tube radiation, and similar components are in place. Extend coatings in these areas, as required, to maintain system integrity and provide desired protection.

a. Coat surfaces behind movable equipment and furniture the same as similar exposed surfaces. Before final installation, coat surfaces behind permanently fixed equipment or furniture with prime coat only.
b. Coat back sides of access panels, removable or hinged covers, and similar hinged items to match exposed surfaces.

6. All interior piping shall be painted in general accordance with Section 54.5 of “Ten States Recommended Standards for Wastewater Facilities”. In lieu of painting colored bands, arrow tape and pipe labeling shall be used in the colors stated in Section 54.5.

B. Scheduling Coating: Apply first coat to surfaces that have been cleaned, pretreated, or otherwise prepared for coating as soon as practicable after preparation and before subsequent surface deterioration.

1. The number of coats and film thickness required is the same regardless of application method.

a. Omit primer on metal surfaces that have been shop primed and touchup painted.
b. Do not apply succeeding coats until previous coat has cured as recommended by manufacturer.
c. Where manufacturer's written instructions require sanding, sand between applications to produce a smooth, even surface.
d. Allow sufficient time between successive coats to permit proper drying. Do not recoat surfaces until coating has dried to where it feels firm, does not deform or feel sticky under moderate thumb pressure, and application of another coat does not cause undercoat to lift or lose adhesion.

2. If undercoats or other conditions show through final coat, apply additional coats until cured film has a uniform coating finish, color, and appearance. Give special attention to edges, corners, crevices, welds, exposed fasteners, and similar surfaces to ensure that they receive a dry film thickness equivalent to that of flat surfaces.

C. Application Procedures: Apply coatings by brush, roller, spray, or other applicators according to manufacturer's written instructions.

1. Brush Application: Use brushes best suited for material applied and of appropriate size for the surface or item being coated.

a. Apply primers and first coats by brush unless manufacturer's written instructions permit using roller or mechanical applicators.
b. Brush out and work brush coats into surfaces in an even film.
c. Eliminate cloudiness, spotting, holidays, laps, brush marks, runs, sags, ropiness, or other surface imperfections. Neatly draw glass lines and color breaks.

2. Rollers: Use rollers of carpet, velvet back, or high-pile sheep's wool as recommended by manufacturer for the material and texture required.
3. Spray Equipment: Use mechanical methods to apply coating if permitted by manufacturer's written instructions and governing regulations.

a. Use spray equipment with orifice size recommended by manufacturer for material and texture required.
b. Apply each coat to provide the equivalent hiding of brush-applied coats.
c. Do not double back with spray equipment building-up film thickness of two coats in one pass, unless recommended by manufacturer.

D. Minimum Coating Thickness: Apply each material no thinner than manufacturer's recommended spreading rate. Provide total dry film thickness of the entire system as recommended by manufacturer.

E. Block Fillers: Apply block fillers to concrete masonry block at a rate to ensure complete coverage with pores filled.

F. Prime Coats: Before applying finish coats, apply a prime coat of material, as recommended by manufacturer, to material required to be coated or finished that has not been prime coated by others.

1. Recoat primed and sealed substrates if there is evidence of suction spots or unsealed areas in first coat, to ensure a finish coat with no burn-through or other defects caused by insufficient sealing.

G. Completed Work: Match approved Samples for color, texture, and coverage. Remove, refinish, or recoat work that does not comply with specified requirements.

## 3.4 PIPING COLOR AND LABEL SCHEDULE

A. All piping colors and labeling shall comply with the latest edition of Recommended Standards for Waste Water Facilities. The following schedule shall apply:

1. Raw sludge line - brown with black bands
2. Sludge recirculation suction line - brown with yellow bands
3. Sludge draw off line - brown with orange bands
4. Sludge recirculation discharge line - brown
5. Natural gas line- orange (or red) with black bands
6. Non-potable water line- blue with black bands
7. Potable water line - blue
8. Chlorine line - yellow
9. Sewage (wastewater) line- gray
10. Compressed air line - green
11. Fuel oil/diesel - red
12. Plumbing drains and vents - black
13. Polymer - purple

## 3.5 FIELD QUALITY CONTROL

A. Owner reserves the right to invoke the following procedure at any time and as often as Owner deems necessary during the period when coatings are being applied:

1. Owner will engage the services of a qualified testing agency to sample coating material being used. Samples of material delivered to Project site will be taken, identified, sealed, and certified in presence of Contractor.
2. Testing agency will perform appropriate tests for the following characteristics as required by Owner:

a. Quantitative materials analysis.

b. Absorption.
c. Accelerated weathering.
d. Accelerated yellowness.
e. Color retention.
f. Alkali and mildew resistance.
g. Abrasion resistance.
h. Apparent reflectivity.
i. Washability.
j. Dry opacity.
k. Recoating.
l. Skinning.

3. Owner may direct Contractor to stop applying coatings if test results show materials being used do not comply with specified requirements. Contractor shall remove noncomplying coating materials from Project site, pay for testing, and recoat surfaces coated with rejected materials. If necessary, Contractor may be required to remove rejected materials from previously coated surfaces if, on recoating with specified materials, the two coatings are not compatible.

## 3.6 CLEANING

A. Cleanup: At end of each workday, remove rubbish, empty cans, rags, and other discarded materials from Project site.

1. After completing coating application, clean spattered surfaces. Remove spattered coatings by washing, scraping, or other methods. Do not scratch or damage adjacent finished surfaces.

## 3.7 PROTECTION

A. Protect work of other trades, whether being coated or not, against damage from coating operation. Correct damage by cleaning, repairing, replacing, and recoating, as approved by Engineer, and leave in an undamaged condition.

1. Provide "Wet Paint" signs to protect newly coated finishes. After completing coating operations, remove temporary protective wrappings provided by others to protect their work.
2. At completion of construction activities of other trades, touch up and restore damaged or defaced coated surfaces. Comply with procedures specified in PDCA P1.

END OF SECTION 09960

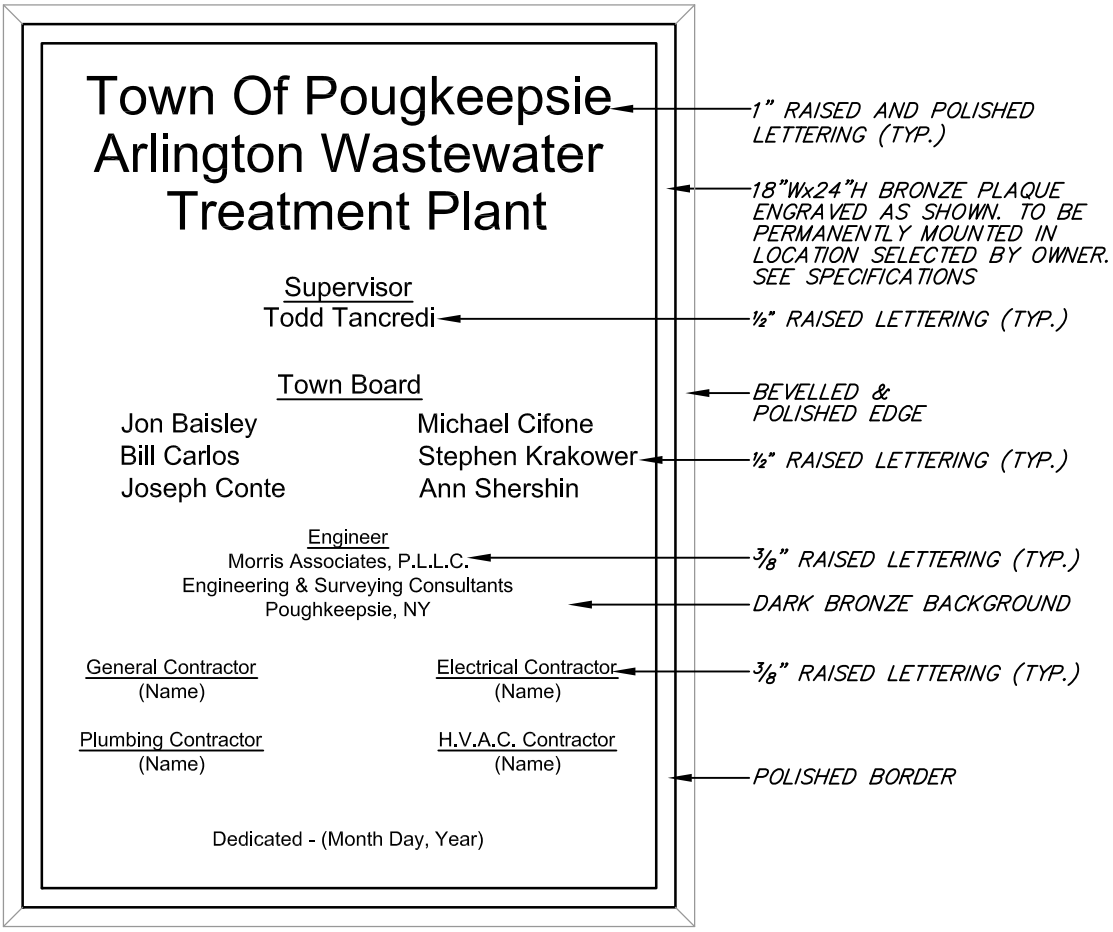


NOTES:

1) TEXT SHOWN IN PARENTHESES ( ) TO BE DETERMINED.

2) SEE SPECIFICATIONS FOR REQUIRED SUBMITTALS.

3) ALL LETTERING TO BE POLISHED


MORRIS ASSOCIATES, PLLC
ENGINEERING CONSULTANTS
9 Elks Lane, Poughkeepsie, New York 12601
Phone No. (845) 454-3411
Fax No. (845) 473-1962
64 Green Street, Suite 1 Hudson, New York 12534
Phone No. (518) 828-2300
Fax No. (518) 828-3963


| REV. No. | DESCRIPTION | DATE | BY |
|---|---|---|---|

**ARLINGTON WASTEWATER TREATMENT PLANT UPGRADE**

TOWN OF POUGHKEEPSIE — DUTCHESS COUNTY, NY

**ADDENDUM #2**
**PLAQUE DETAIL**

DWG 1-1

| DATE | SCALE | DESIGNED BY: RJJ | FILE No. |
|---|---|---|---|
| APRIL 2016 | N.T.S. | DRAWN BY: RJA<br>CHECKED BY: RJJ | 60401.30 |

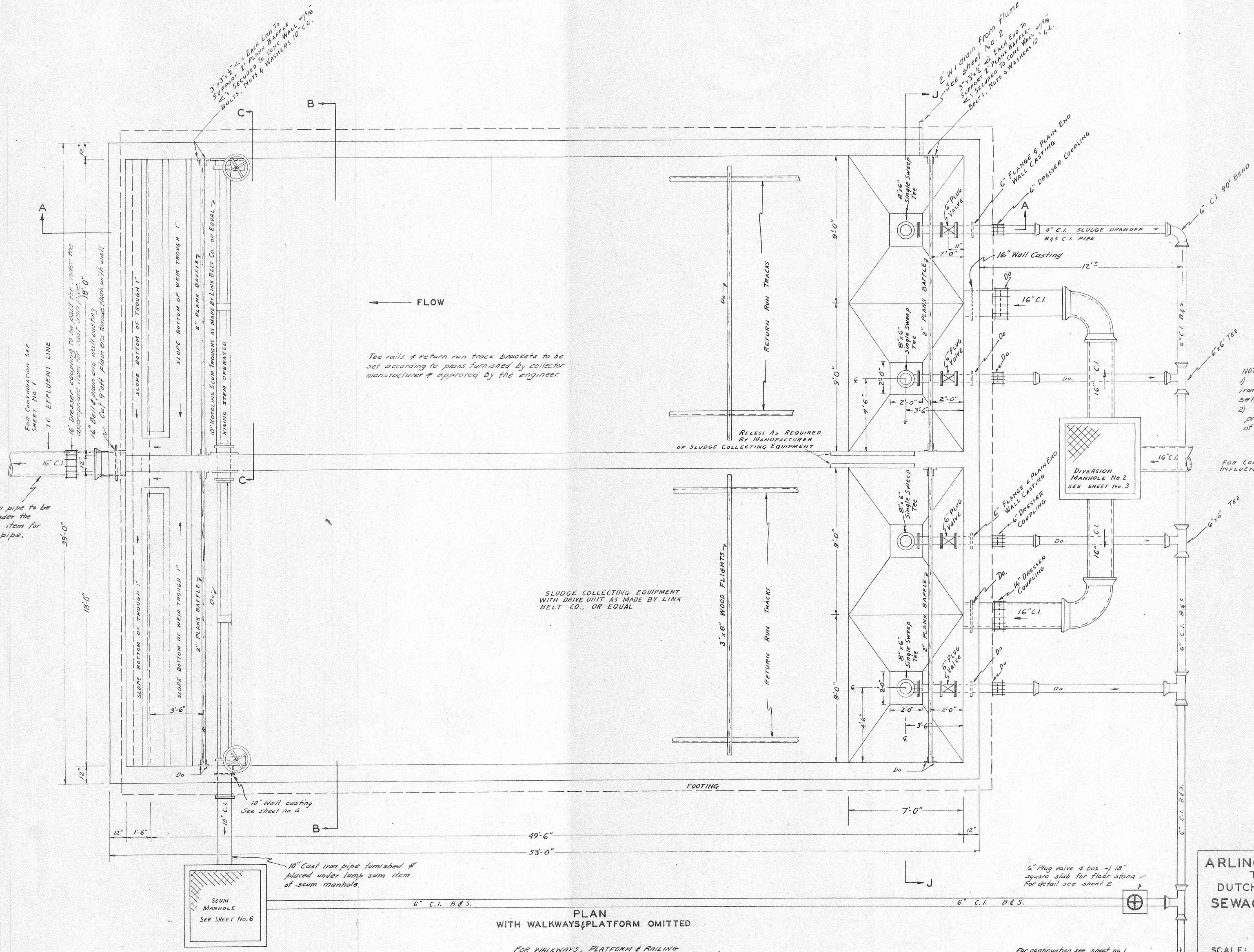


NOTE:
1) Limit of payment on 6" cast iron pipe to be 1' outside the settling tank wall.
2) 16" cast iron pipe furnished & placed under lump sum item of diversion manholes.

For Continuation of Influent See Sheet No. 1

## PLAN
WITH WALKWAYS & PLATFORM OMITTED

CONTRACT NO. 5

**ARLINGTON SEWER DISTRICT**
TOWN OF POUGHKEEPSIE
DUTCHESS COUNTY, NEW YORK
**SEWAGE TREATMENT PLANT**
**SETTLING TANK**

SCALE: 3/8" = 1'-0"  MARCH 1957

MORRELL VROOMAN ENGINEERS
LICENSE NO. N.Y. 22134 GLOVERSVILLE, NEW YORK

57S134

DRAWN BY E.H.R.
TRACED BY E.R.S.
CHECKED BY W.E.

SHEET 4 OF 29 SHEETS

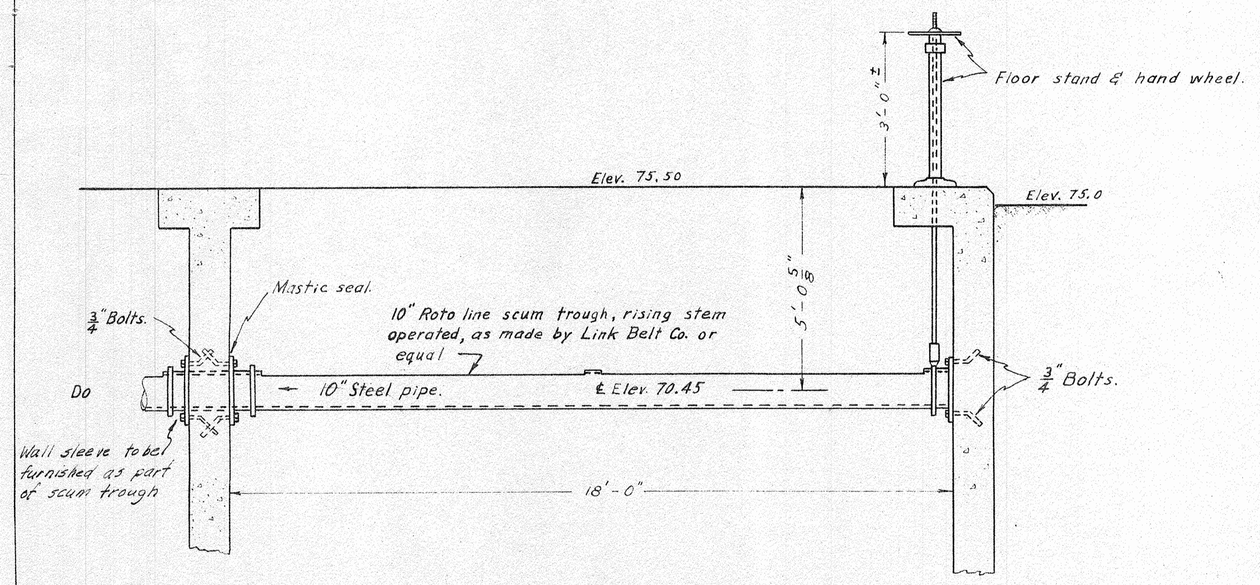


SECTION C-C
SCUM TROUGH ONLY
SCALE: 3/8" = 1'-0"

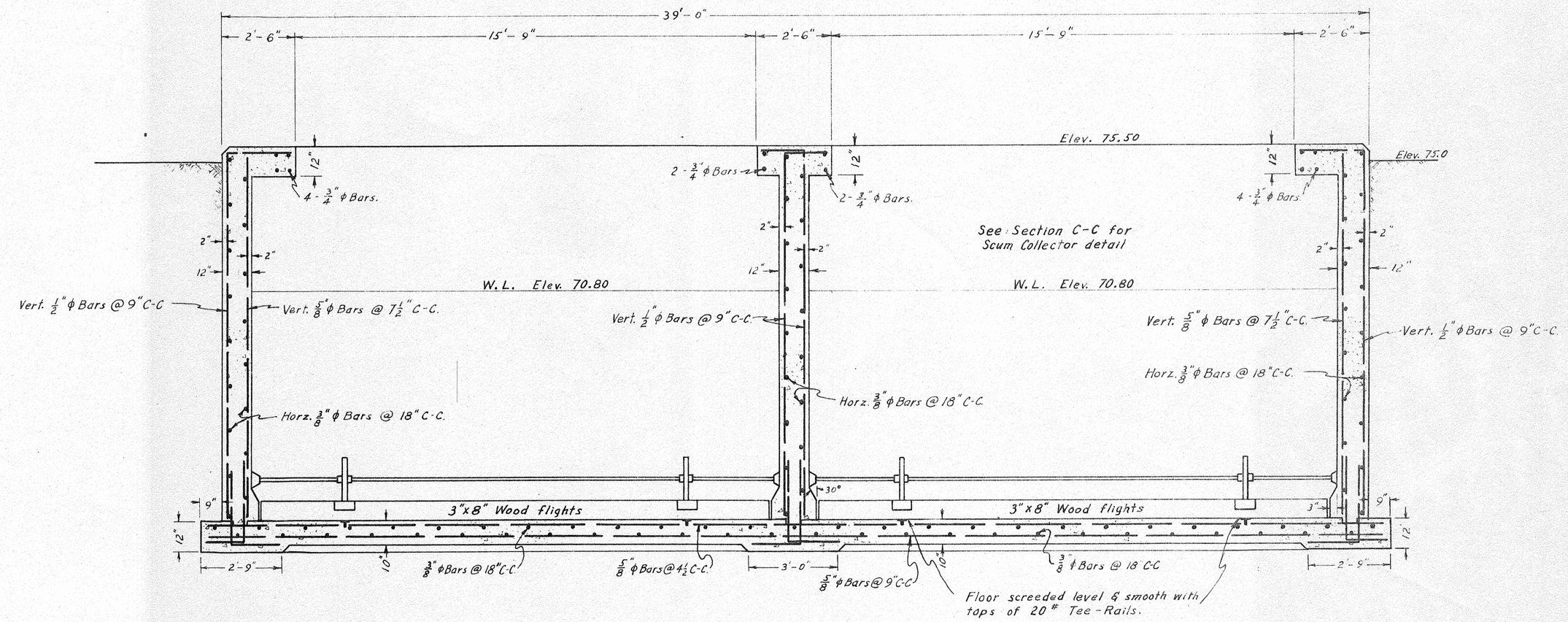


SECTION B-B
WALLS, FLOORS & FOOTINGS
ONLY
SCALE: 3/8" = 1'-0"

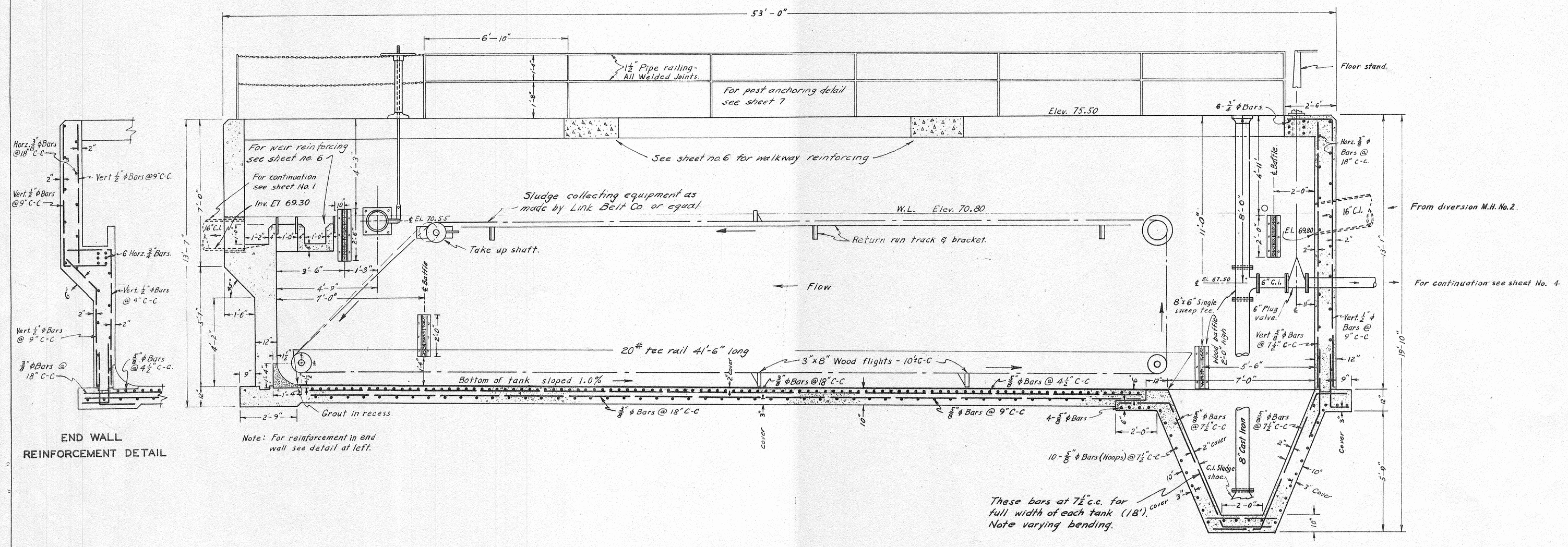


END WALL
REINFORCEMENT DETAIL

Note: For reinforcement in end wall see detail at left.

SECTION A-A
SCALE: 3/8" = 1'-0"

| | |
|---|---|
| DRAWN BY | E.H.K. |
| TRACED BY | |
| CHECKED BY | U.E. |

575 135

CONTRACT NO. 5

ARLINGTON SEWER DISTRICT
TOWN OF POUGHKEEPSIE
DUTCHESS COUNTY, NEW YORK

SEWAGE TREATMENT PLANT

SETTLING TANK

SCALE: AS SHOWN — MARCH 1957

MORRELL VROOMAN ENGINEERS
LICENSE NO. N.Y. 22136 — GLOVERSVILLE, NEW YORK

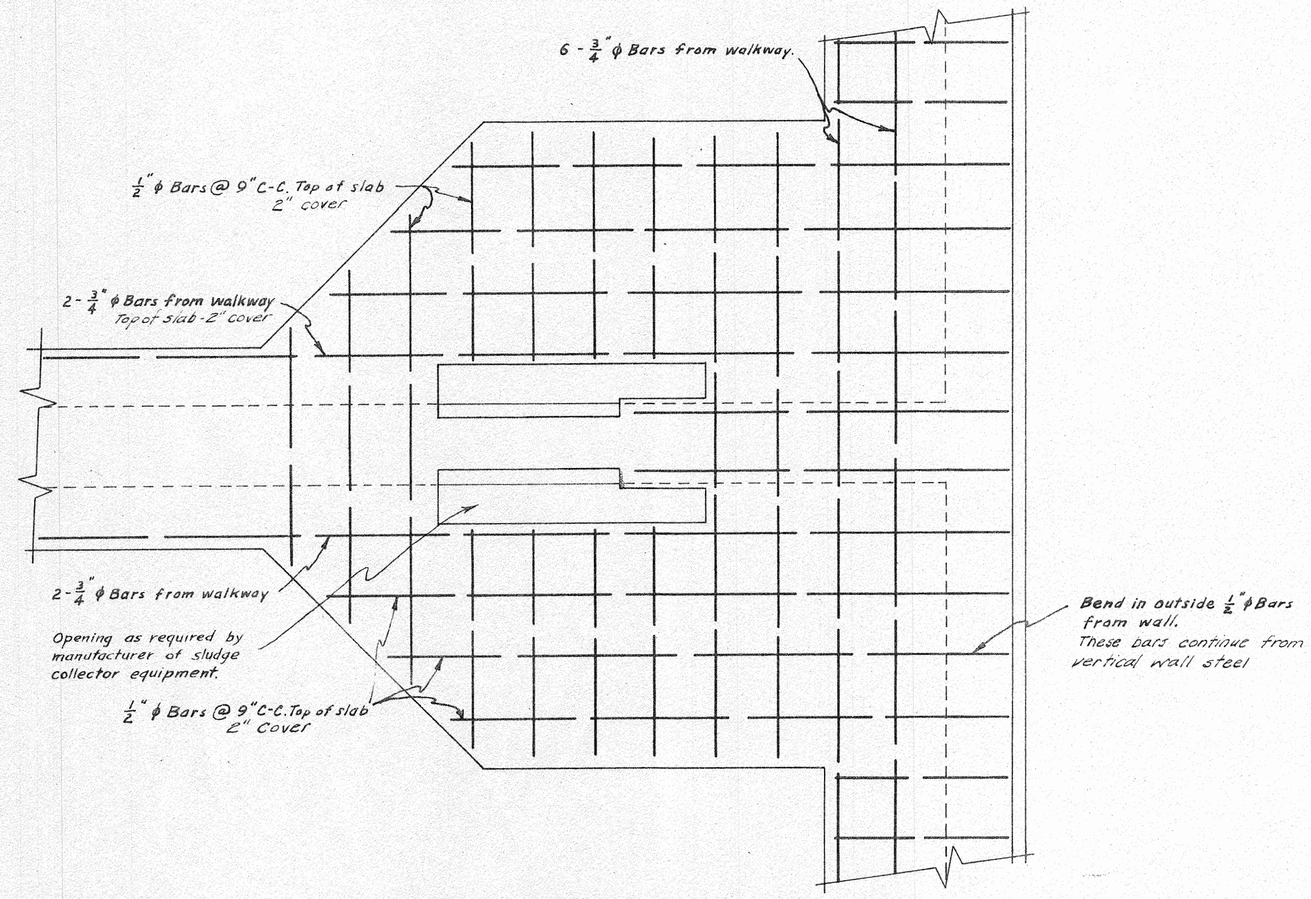


PLATFORM REINFORCING
SCALE: 3/4" = 1'-0"

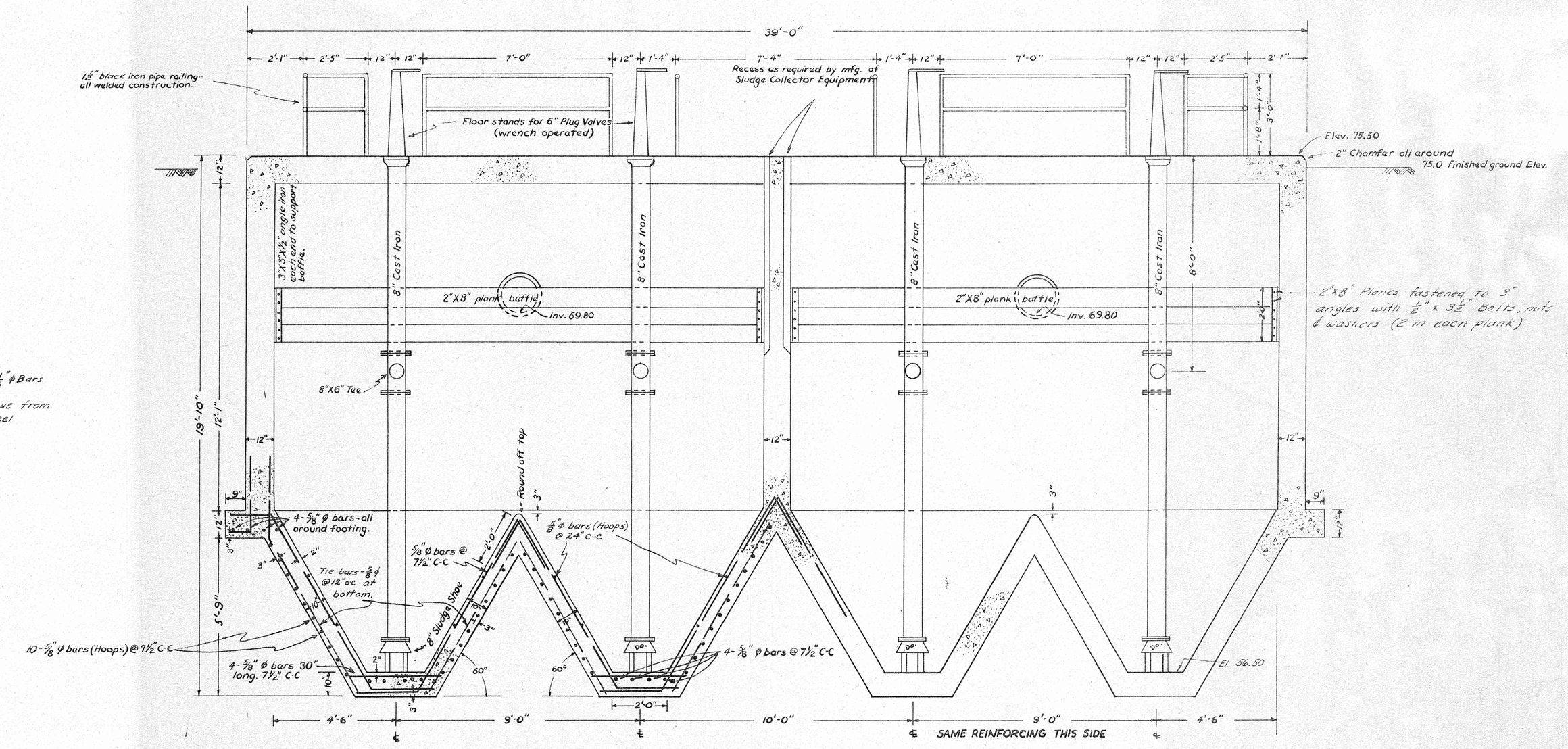


SECTION J-J
SCALE: 3/8" = 1'-0"

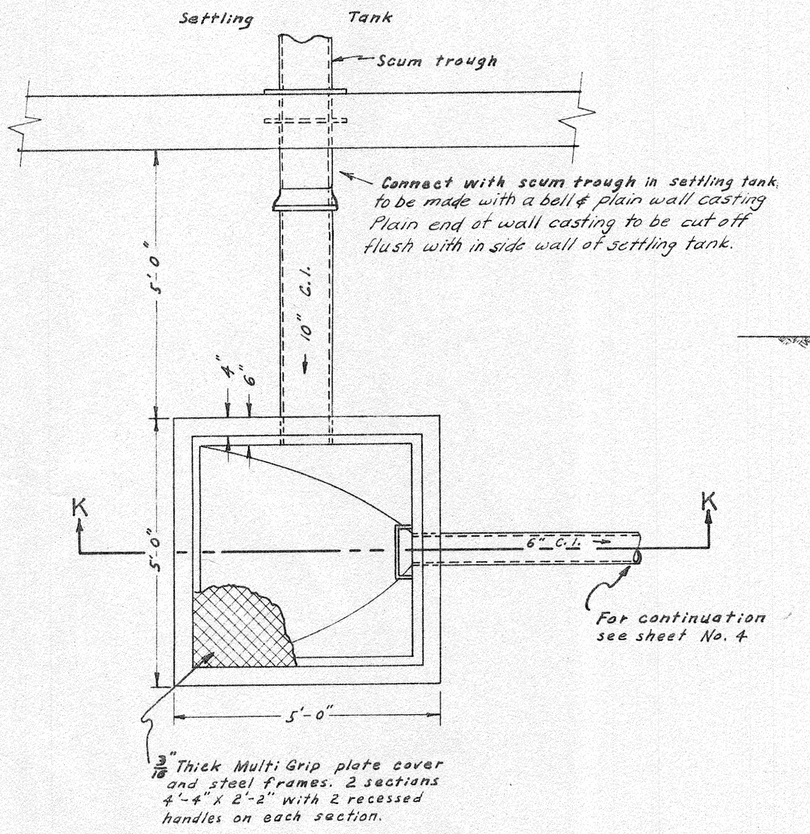


SCUM MANHOLE
SCALE: 1/2" = 1'-0"

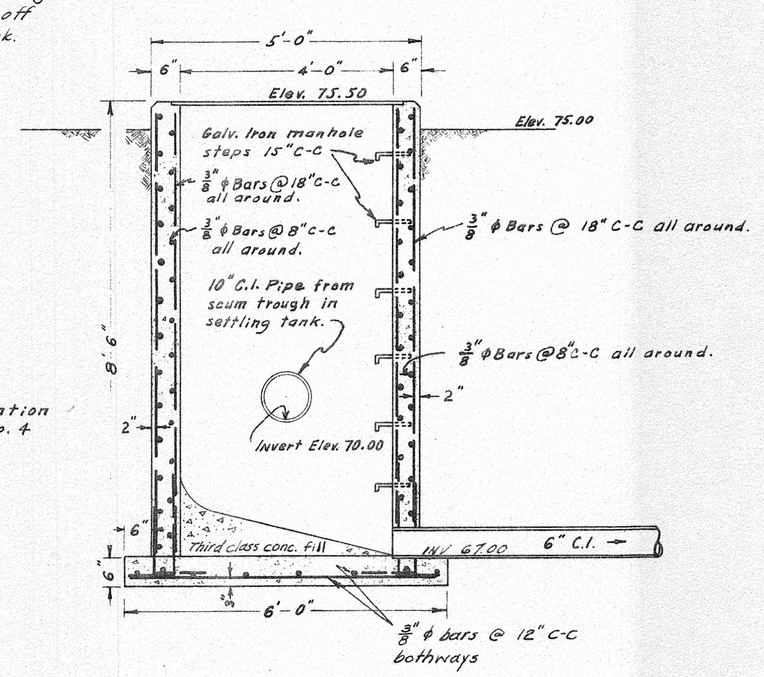


SCUM MANHOLE
SECTION K-K
SCALE: 1/2" = 1'-0"

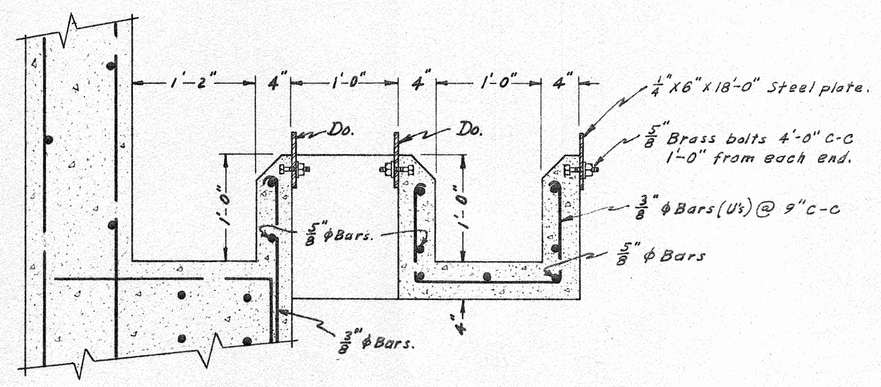


REINFORCING AT WEIR
SCALE: 1" = 1'-0"

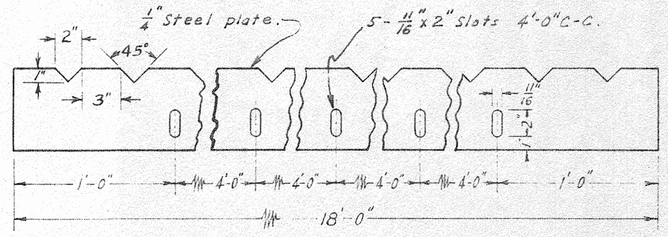


WEIR DETAIL
SCALE: 1 1/2" = 1'-0"

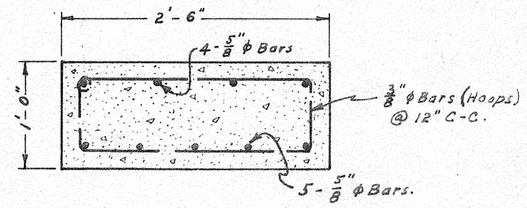


REINFORCING AT CROSS WALK
SCALE: 1" = 1'-0"

CONTRACT NO. 5

ARLINGTON SEWER DISTRICT
TOWN OF POUGHKEEPSIE
DUTCHESS COUNTY, NEW YORK
SEWAGE TREATMENT PLANT

SETTLING TANK

SCALE: AS SHOWN — MARCH 1957

Morrell Vrooman Inc. MORRELL VROOMAN ENGINEERS
LICENSE NO. N.Y. 22134 GLOVERSVILLE, NEW YORK

57 S 136

DRAWN BY
TRACED BY
CHECKED BY

1. ℄ of all railings to be 4½" from inside of walkways & platform

2. All railings to be 1½" Black iron with all connections & joints welded

3. Vertical post spacing not to exceed 8'-0"

4. After construction, all railings & posts shall be painted 2 coats of aluminum paint

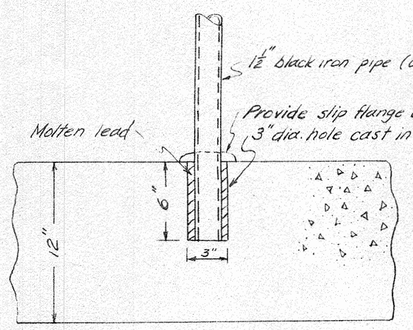


POST ANCHORING DETAIL

SCALE: $\frac{1}{2}$" 1'-0"

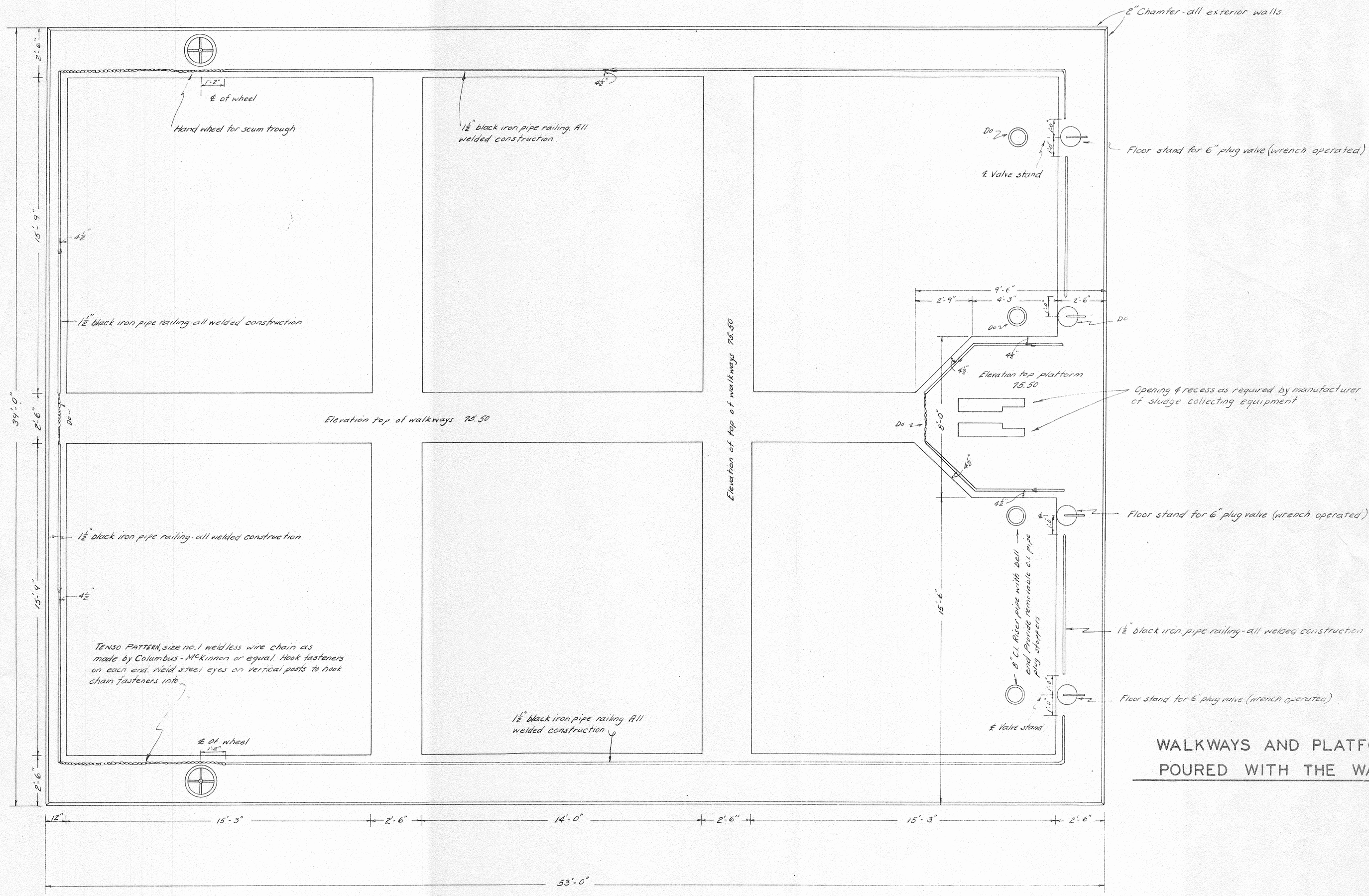


WALKWAYS AND PLATFORM

SCALE: $\frac{3}{8}$" = 1'-0"

WALKWAYS AND PLATFORM TO BE POURED WITH THE WALLS

| | |
|---|---|
| DRAWN BY | R.Z.Z. |
| TRACED BY | R.B.Z. |
| CHECKED BY | V.E. |

57 S 137

CONTRACT NO 5

ARLINGTON SEWER DISTRICT
TOWN OF POUGHKEEPSIE
DUTCHESS COUNTY, NEW YORK

SEWAGE TREATMENT PLANT
SETTLING TANK

SCALE: AS SHOWN

MARCH 1957

Morrell Vrooman Jr.

MORRELL VROOMAN ENGINEERS
LICENSE NO. N.Y. 22134
GLOVERSVILLE, NEW YORK

SHEET 7 OF 29 SHEETS

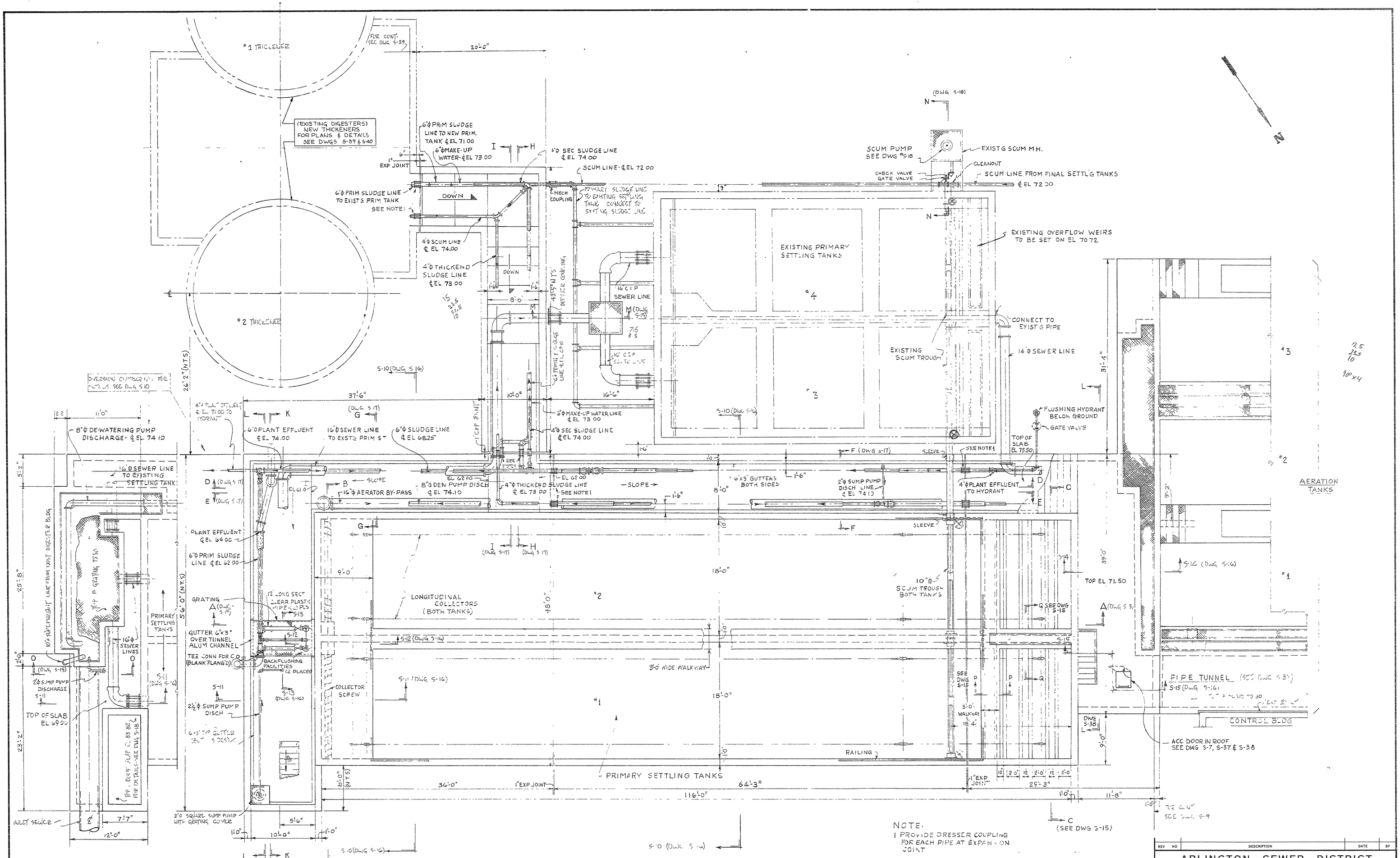


UPPER LEVEL
PRIMARY SETTL'G TANK INLET- PARTIAL PLAN
SCALE: 3/16" = 1'-0"

PRIMARY SETTLING TANKS AND PIPE TUNNEL – PLAN
SCALE 3/16" = 1'-0"

| REV NO | DESCRIPTION | DATE | BY |
|---|---|---|---|

ARLINGTON SEWER DISTRICT
TOWN OF POUGHKEEPSIE
DUTCHESS COUNTY, NEW YORK

SEWAGE TREATMENT FACILITIES

KNOX • HAYWARD • PAKAN ASSOCIATES
CONSULTING ENGINEERS
POUGHKEEPSIE NEW YORK

JOHN J BAFFA
CONSULTING ENGINEERS
NEW YORK NEW YORK

WIESENFELD & LEON
STRUCTURAL ENGINEERS
NEW YORK NEW YORK

PRIMARY SETTLING TANKS & TUNNEL – PLAN

SCALE AS NOTED
DATE 1 OCT. '67
DWG NO S-14

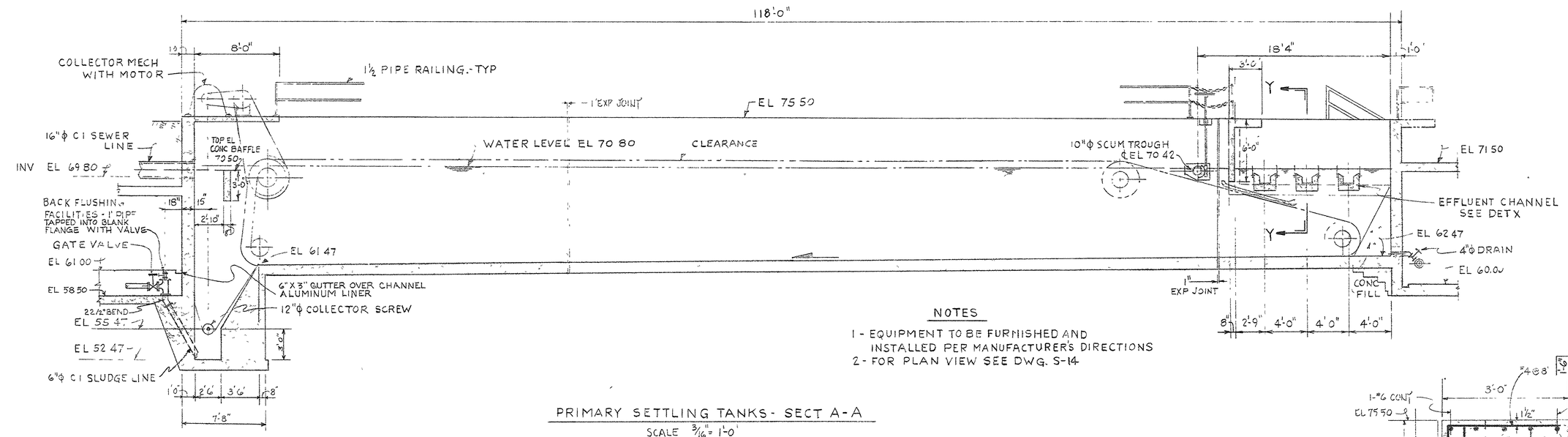


NOTES

1 - EQUIPMENT TO BE FURNISHED AND INSTALLED PER MANUFACTURER'S DIRECTIONS
2 - FOR PLAN VIEW SEE DWG. S-14

PRIMARY SETTLING TANKS - SECT A-A
SCALE 3/16" = 1'-0"

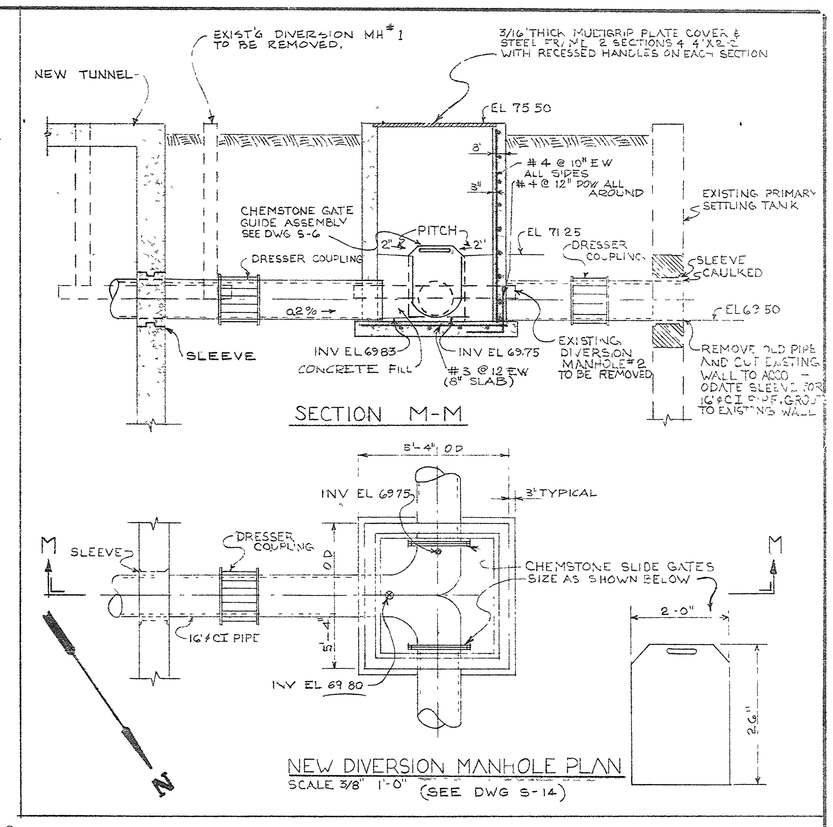


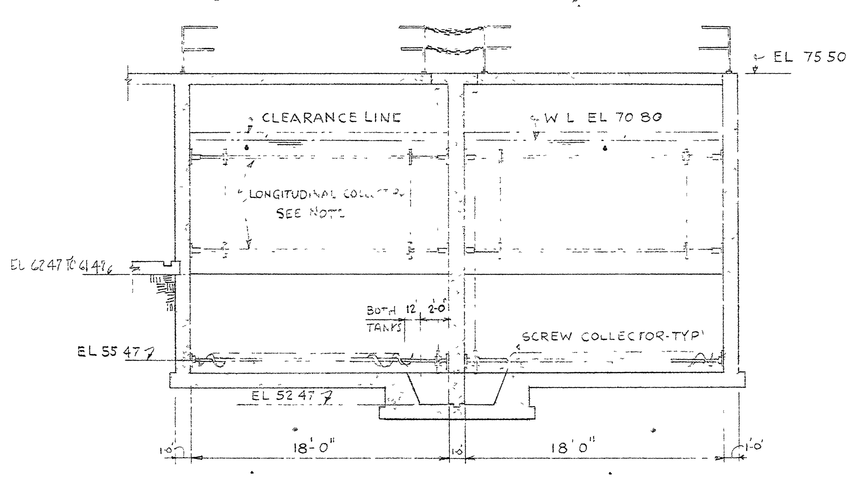


SECTION B-B
SCALE 3/16" = 1'-0"

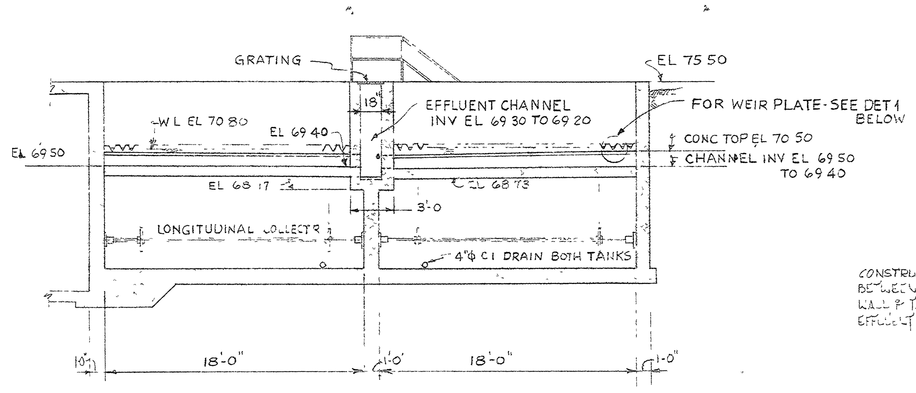


SECTION C-C
SCALE 3/16" = 1'-0

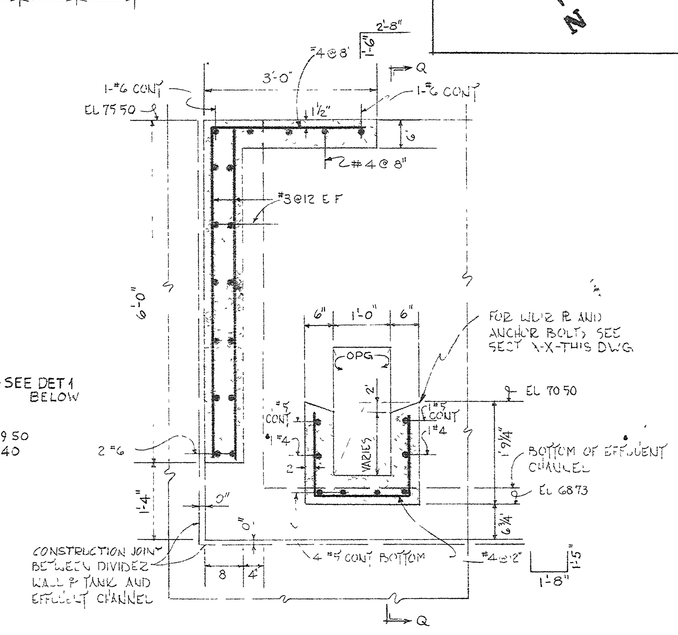


SECTION P-P
SCALE: 3/4" = 1'-0"

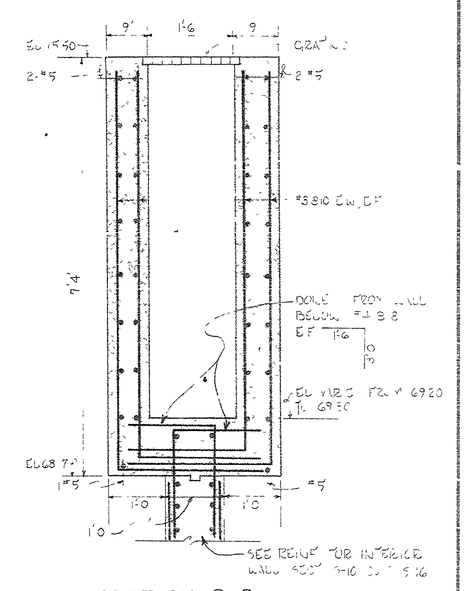


SECTION Q-Q
SCALE: 3/4" = 1'-0"

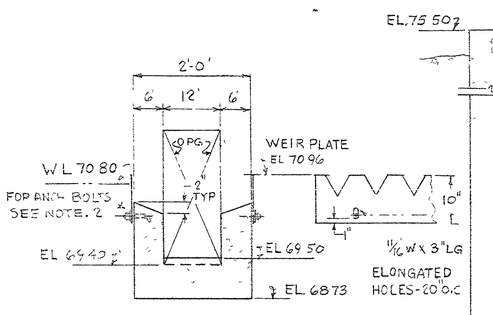


SECTION X-X
SCALE: 3/4" = 1'-0"

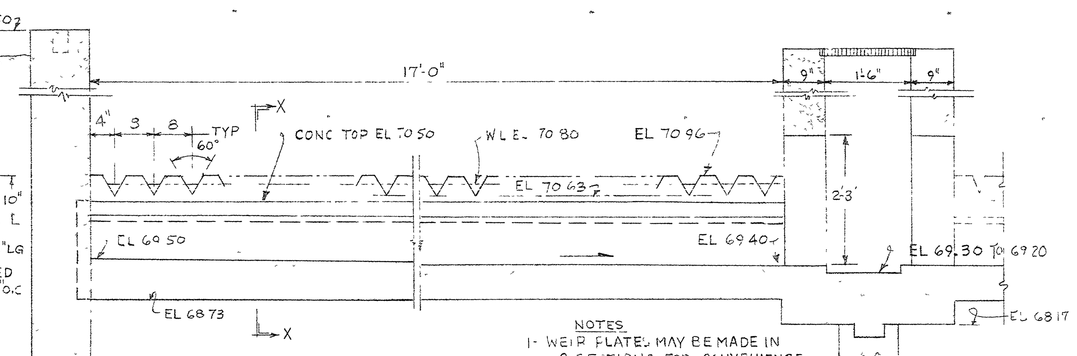


NOTES
1- WEIR PLATES MAY BE MADE IN 2 SECTIONS FOR CONVENIENCE
2- FOR WEIR PLATE ASSY & ANCHOR BOLT DETAILS SEE DWG S-13

SECTION Y-Y OVERFLOW WEIR DISCHARGE CHANNEL
DETAIL 1 WEIR PLATES (MATL: 1/8" FIBERGLASS) - 12 REQ'D
SCALE: 3/4" = 1'-0"

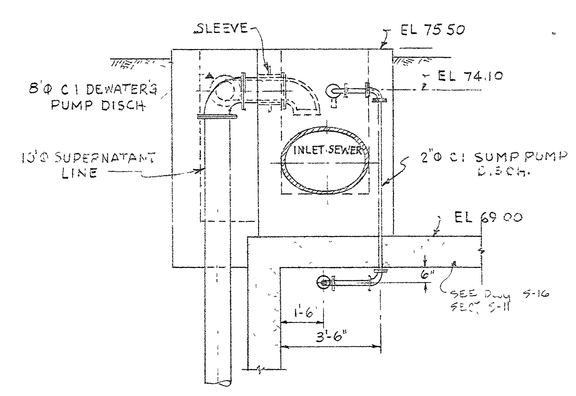


SECTION O-O
SCALE 3/8" = 1'-0"

NOTES
1- FOR LOCATION OF SECTIONS A-A, B-B, C-C, P-P & O-O SEE DWG. S-14

| REV NO | DESCRIPTION | DATE | BY |
|---|---|---|---|

ARLINGTON SEWER DISTRICT
TOWN OF POUGHKEEPSIE
DUTCHESS COUNTY, NEW YORK

SEWAGE TREATMENT FACILITIES

KNOX • HAYWARD • PAKAN ASSOCIATES
CONSULTING ENGINEERS
POUGHKEEPSIE NEW YORK

JOHN J BAFFA
CONSULTING ENGINEERS
NEW YORK NEW YORK

WIESENFELD & LEON
STRUCTURAL ENGINEERS
NEW YORK NEW YORK

PRIMARY SETTLING TANKS
SECTIONS

SCALE AS NOTED
DATE 1 OCT. '67
DWG NO S-15

STANRAY PRODUCT INC PORT WASHINGTON N.Y.